Department of Administrative Services
Purchasing and Contracts

500 S Grand Central Pky 4th Fl • Box 551217 • Las Vegas NV 89155-1217
(702) 455-2897 • Fax (702) 386-4914

Sabra Smith Newby, Chief Administrative Officer
Adleen B. Stidhum, Purchasing Administrator

CLARK COUNTY, NEVADA
BID NO. 603175-13
WINCHESTER CULTURAL CENTER: NEW RESTROOM, SITE LIGHTING & PARKING LOT REHABILITATION

December 13, 2013

ADDENDUM NO. 1

INVITATION TO BID

1. The Bid opening date of December 20, 2013 at 2:15:00 p.m. **remains unchanged.**

BID FORM

2. The Bid Form will be **deleted** in its entirety and **replaced** with the attached Revised Bid Form , pages 4-1 through 4-4. **Please use the new revised Bid Form when submitting a bid.**

RESPONSES TO RFIs

3. Q1 On sheet E0.2 the schedules show panels H1 and H2 but they are not shown on the one line diagram, where are they being fed from?

A1 **Panels H1 and H2 are fed from switchgear SWG-1 via a 100 Amp, 3-pole circuit breaker (for each panel) and #1 copper conductors.**

Q2 On sheet E0.02 panel schedules for SWG-1 and SWG-2 there is no AIC rating listed, are we to assume the minimum rating (14k) as shown in spec section 26 24 16, part 2.2D?

A2 **Correct. A 14k rating is sufficient for the power distribution system equipment SWG-1 and SWG-2.**

Q3 Some bushes will be destroyed due to electrical trenching. The specifications only mentions re-grading after trenching. Do these landscaping plants need to be replaced?

A4 **MINIMIZE destruction of existing elements. Use reasonable care in performance of work. GC to take photographs as required in the specifications prior, during, and after work completion. A new $2,000.00 Landscape Plant Replacement Allowance is provided in the Bid Form (attached) for the replacement of damaged plants that were unavoidable during construction (Photographs and a receipt are required for reimbursement).**

Q4 Will alternate routes be acceptable for the electrical line?

A4 **Alternate routes will be evaluated when a request is made by the awarded GC.**

BOARD OF COUNTY COMMISSIONERS
STEVE SISOLAK, Chairman • LARRY BROWN, Vice Chairman
SUSAN BRAGER • TOM COLLINS • CHRIS GIUNCHIGLIANI • MARY BETH SCOW • LAWRENCE WEEKLY
DONALD G. BURNETTE, County Manager

Q5 Sheet C1.7 shows (4) new concrete bases, light poles and fixtures.
a. Sheet E1.1 shows the same (4) plus an additional (2).
b. Are (4) or (6) new concrete bases, light poles and fixtures required?

A5 Please reference E1.1 for location and total light fixtures.

Q6 Sheet E1.1D Demolition Plan indicates existing circuitry (dashed lines).
a. Are these to be abandoned or removed? Sheet E1.1 shows different circuitry routing.
b. Is it your intent to provide new circuitry as shown on E1.1?

A6
a. Existing conduit/wire shall be abandoned in place, unless new work coincides with existing conduit/wire, whereby it shall then be removed. Any abandoned wiring shall be disconnected and removed from branch panel boards, cut back (as much as possible) and capped off.
b. Yes, it is the intent to provide new circuitry as shown.

Q7 If new conduit trenches are required please indicate conditions of all landscaped or hard surface areas that require removal and replacement.

A7 Contractor to field verify existing conditions prior to trenching. Contractor shall replace any damaged landscape or hard surface to match adjacent conditions.

Q8 Sheet C1.3, are you demolishing existing and providing new concrete pole bases? Or is this something for the EC to include? Let me know.

A8 Yes, we are demolishing the existing concrete pole bases and new ones will be provided by the Contractor. See detail 2/E1.1.

Q9 Please confirm the following: Spec section 13 12 00 part 7 (A, B, C, D)
These are all items already included with the pre-fabricated building? Or are these all loose items provided with the building and installed by the EC?

A9 Electrical contractor is responsible for everything shown on drawing E0.2, detail 1 (electrical one-line), and detail 4 (floor plan). Provide and install accordingly. Remainder of items listed in B, C, and D are provided by pre-fab building manufacturer/supplier. Coordinate and verify, and install as required.

Q10 Sheet C1.4 and C1.5 Note 11 Install Precast Bumper Block, This is not shown on either sheet, can we get a clarification please.

A10 See attached Sheet C1.4 , and sheet C1.5 redlines.

Q11 Where is the location of the pull box as noted on E0.2, Detail 3?

A11 If / as needed for the longer conduit and conductor runs.

Q12 Will there be a second 1" conduit in the light pole conduit trenches or is Detail #3 on E1.1 a typical site detail? There is not a second conduit shown of E1.1.

A12 Spare conduit (with pull wire) was requested by Owner and is shown accordingly in typical trench detail.

Q13 Is detail #3 on E0.2 correct? Normally a pull box will sit on the type II and the concrete is poured around it. This detail shows the pull box sitting on top of the slab.

A13 Concrete pad is shown/provided as more of a traffic-rated condition, for structural support and overall integrity of box installation. More appropriately (within non traffic-rated areas) the base material may be a 3" to 4" crushed stone or gravel composite.

Q14 Can the existing light pole conduit be reused where possible?

A14 No. Not accepted due to age and condition of existing infrastructure.

Q15 Will the existing H2 cabinet be replaced or just the panel inside it?

A15 It is intended that all affected electrical equipment be replaced with new, including the 'H2' cabinet.

Q16 Will the existing red lights on the existing poles be reinstalled on the new poles at the courts?

A16 Red indicators will be replaced with new, equivalent units; with control to match previous functionality.

Q17 Will the three (3) new wall lights be installed in the existing light locations?

A17 Location of new building-mounted lighting is not necessarily intended to occur at existing fixture locations; but is to be centered across each building 'section' as shown on plan.

Q18 Are the old light poles to be returned to owner?

A18 Light poles and fixtures to be dispose by the GC and transport off-site.

Q19 Please provide physical properties of existing concrete light pole bases scheduled for removal (diameter and depth). See attached photo.

A19 The diameter of the light pole is approximately 2'-6". The depth is unknown. GC to estimate the depth.

Q20 Referring to the removal of existing light pole bases, is it acceptable to remove the existing concrete bases 12" to 24" below finish grade and leave remaining in place? (Note: New light pole bases would be located adjacent to existing). If not acceptable, please provide the depth of existing pole bases and clarify requirements of excavation and backfill for stability of new light pole bases?

A20 No, it is not acceptable to leave existing bases and install new bases adjacent. Existing depth is unknown. Excavation and backfill (including compaction) shall be in accordance with requirements of the geotechnical report.

No further questions or RFIs will be taken.

Should you have any questions, please contact me at (702) 455-4230 or via email at jhaining@clarkcountynv.gov.

ISSUED BY:

JIM HAINING, CPSM, CPSD, C.P.M., A.P.P., MBA
Sr. Purchasing Analyst

Attachment(s): Revised Bid Form, pages 4-1 through 4-4
603175 ad1_ConcBaseLight.pdf
603175 ad1_Winchester Center_C1.4-Grading Plan_12-11-2013.pdf
603175 ad1_Winchester Center_C1.5-Detail_12-11-2013.pdf

Cc: Kety Allred, RPM
Darcey Vertuza, OZ Architects

CLARK COUNTY, NEVADA
BID FORM
BID NO. 603175-13
WINCHESTER CULTURAL CENTER: NEW RESTROOM, SITE LIGHTING & PARKING REHABILITATION
PWP NUMBER: CL-2014-88
REVISED PER ADDENDUM NO. 1

_____
(NAME)

_____
(ADDRESS)

I, THE UNDERSIGNED BIDDER:

1. Agree, if awarded this Contract, I will complete all work for which a Contract may be awarded and to furnish any and all labor, equipment, materials, transportation, and other facilities required for the services as set forth in the Bidding and Contract Documents.

2. Have examined the Contract Documents and the site(s) for the proposed work and satisfied themselves as to the character, quality of work to be performed, materials to be furnished and as to the requirements of the specifications.

3. Have completed all information in the blanks provided and have submitted the following within this Bid:

   a) Have listed the name of each Subcontractor which will be paid an amount exceeding five percent (5%) of the Total Base Bid amount.

   b) Attached a bid security (in the form of, at my option, a Cashiers Check, Certified Check, Money Order, or Bid Bond in favor of the Owner in the amount of five percent (5%) of the Total Base Bid amount.

4. I acknowledge that if I am one of the three apparent low bidders at the bid opening, and if I have listed Subcontractor(s) pursuant to NRS 338.141, I must submit Bid Attachment 2 within two-hours after completion of the bid opening pursuant to the Instructions to Bidders, and I understand that hand delivery is recommended, and Owner shall not be responsible for lists received after the two hour time limit, regardless of the reason. This Attachment will be time stamped by the Purchasing and Contracts Division. I understand that submission after the two-hour time limit is not allowed and will be returned to me and the bid may be deemed non-responsive. I acknowledge that for:

   a) Projects **UNDER** $5,000,000

      I need to list **only those Subcontractors** that will provide labor/improvements exceeding $50,000.00.

5. I acknowledge that if notified that I am the low bidder, I must submit the Disclosure of Ownership/Principals form within 24-hours of request.

6. I acknowledge that if I am one of the three apparent low bidder(s) for the base bid at the bid opening, I must submit the Bid Attachment 4, Schedule of Values, by 12:00 Noon of the next business day.

7. I acknowledge that my bid is based on the current State of Nevada prevailing wages.

8. I acknowledge that I have not breached a public work contract for which the cost exceeds $25,000,000, within the preceding year, for failing to comply with NRS 338.147 and the requirements of a contract in which I have submitted within 2 hours of the bid opening an Affidavit pertaining to preference eligibility.

9. Upon faxed or mailed receipt of a Notice of Intent to Award the Contract, I will provide the following submittals within seven business days from receipt of the Notice:

   a) Performance Bond, Labor and Material Payment Bond and a Guaranty Bond, for 100% of the Contract amount as required.

   b) Certificates of insurance for Commercial General Liability in the amount of $1,000,000, Automobile Liability in the amount of $1,000,000, and Workers' Compensation insurance issued by an insurer qualified to underwrite Workers' Compensation insurance in the State of Nevada, as required by law.

10. I acknowledge that if I do not provide the above submittals on or before the seventh business day after receipt of the Notice of Intent to Award; or do not keep the bonds or insurance policies in effect, or allow them to lapse during the performance of the Contract; I will pay over to the Owner the amount of **$50** per day as liquidated damages.

11. I confirm this bid is genuine and is not a sham or collusive, or made in the interest of, or on behalf of any person not herein named, nor that the Bidder in any manner sought to secure for themselves an advantage over any bidders.

12. I further propose and agree that if my bid is accepted, I will commence to perform the work called for by the contract documents on the date specified in the Notice to Proceed and I will complete all work within the calendar days **specified in the General Conditions.**

13. I further propose and agree that I will accept as full compensation for the work to be performed the price written in the Bid Schedule below.

14. I have carefully checked the figures below and the Owner will not be responsible for any error or omissions in the preparation or submission of this Bid.

15. I agree no verbal agreement or conversation with an officer, agent or employee of the owner, either before or after the execution of the contract, shall affect or modify any of the terms or obligations of this Bid.

16. I am responsible to ascertain the number of addenda issued, and I hereby acknowledge receipt of the following addenda:

Addendum No. _____ dated, _____ Addendum No. _____ dated, _____
Addendum No. _____ dated, _____ Addendum No. _____ dated, _____
Addendum No. _____ dated, _____ Addendum No. _____ dated, _____
Addendum No. _____ dated, _____ Addendum No. _____ dated, _____
Addendum No. _____ dated, _____ Addendum No. _____ dated, _____

17. I agree to perform all work described in the drawings, specifications, and other documents for the amounts quoted below:

ITEM NUMBER	ITEM DESCRIPTION	LUMP SUM
1.	WINCHESTER CULTURAL CENTER: NEW RESTROOM, SITE LIGHTING & PARKING LOT REHABILITATION, AS SPECIFIED	$
2.	PERMITS AND FEES BID ALLOWANCE	$ 8,000
3.	LANDSCAPE PLANT ALLOWANCE	$ 2,000
4.	CONSTRUCTION CONFLICTS AND ADDITIONAL WORK ALLOWANCE	$ 50,000
5.	DUST CONTROL, AS SPECIFIED	$
6.	STORMWATER POLLUTION, AS SPECIFIED	
	TOTAL BID AMOUNT	$

SUBCONTRACTORS EXCEEDING 5% OF BASE BID AMOUNT

PRIME CONTRACTOR MUST INCLUDE ITS NAME ON THIS LIST IF HE OR SHE INTENDS TO PERFORM ANY OF THE LABOR OR PORTIONS OF THE PUBLIC WORK.
THE CONTRACTOR SHALL NOT SUBSTITUTE A SUBCONTRACTOR WHO IS NAMED IN THIS BID, PURSUANT TO NEVADA REVISED STATUTE 338.141. THE FOLLOWING SUBCONTRACTORS SHALL BE UTILIZED. A BIDDER, WHICH FAILS TO LIST A SUBCONTRACTOR (S), REPRESENTS THAT NO SUBCONTRACTOR(S) MEET THE STATUTORY REQUIREMENTS.

DESCRIPTION OF WORK	SUBCONTRACTORS' FIRM NAME(S)	*BEG	*ETHNICITY

Legal Name of Firm as it Would Appear in Contract

Signature of Bidder (Authorized Representative)

Today's Date

**Reference Instructions to Bidders for Definitions (Section 7.3(d)).*

18. BUSINESS ENTERPRISE INFORMATION:

The Prime Contractor submitting this Bid is a ☐ MBE ☐ WBE ☐ PBE ☐ SBE ☐ NBE ☐ LBE as defined in the Instructions to Bidders.

19. BUSINESS ETHNICITY INFORMATION:

The Prime Contractor submitting the Bid Ethnicity is ☐ Caucasian (CX) ☐ African American (AA) ☐ Hispanic American (HA) ☐ Asian Pacific American (AX) ☐ Native American (NA) ☐ Other as defined in the Instructions to Bidders.

20. BIDDERS' PREFERENCE Is the Bidder claiming Bidders' Preference?

☐ Yes If yes, the Bidder acknowledges that he/she is required to follow the requirements set forth in the Affidavit (Bid Attachment 3).

☐ No **I do not have a Certificate of Eligibility to receive preference in bidding**.

21. _____
LEGAL NAME OF FIRM AS IT WOULD APPEAR IN CONTRACT

_____
ADDRESS OF FIRM

_____
CITY, STATE, ZIP CODE

_____ _____
TELEPHONE NUMBER FAX NUMBER

NEVADA STATE CONTRACTORS' BOARD LICENSE INFORMATION:

I certify that the license(s) listed below will be the license(s) used to perform the majority of the work on this project.

LICENSE NUMBER: _____
LICENSE CLASS: _____
LICENSE LIMIT: _____
ONE TIME LICENSE LIMIT INCREASE $_____ IF YES, DATE REQUESTED _____

CLARK COUNTY BUSINESS LICENSE NO. _____

STATE OF NEVADA BUSINESS LICENSE NO. _____

_____ _____
AUTHORIZED REPRESENTATIVE (PRINT OR TYPE) E-MAIL ADDRESS

_____ _____
SIGNATURE OF AUTHORIZED REPRESENTATIVE TODAY'S DATE

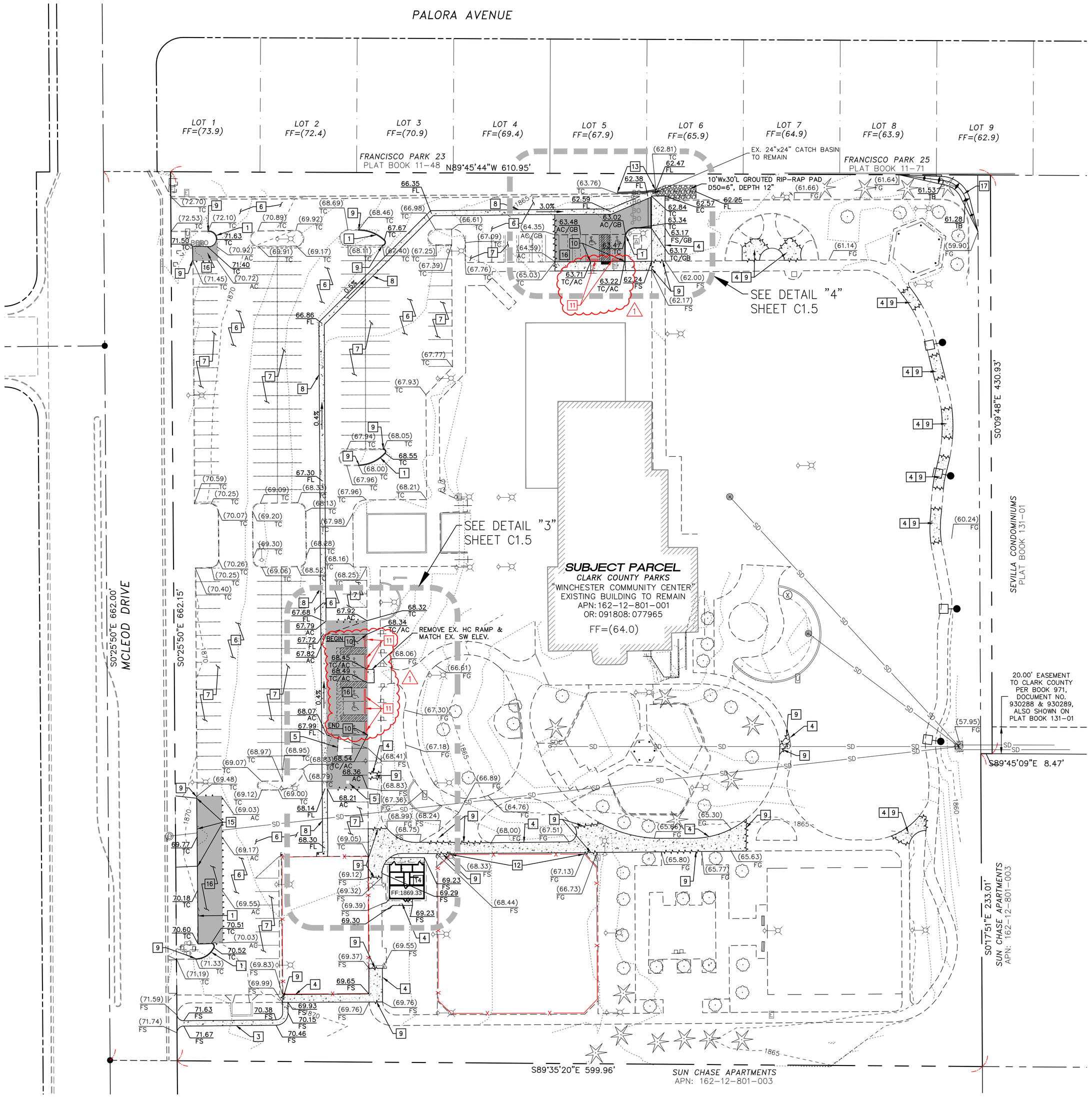

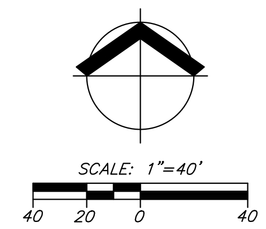

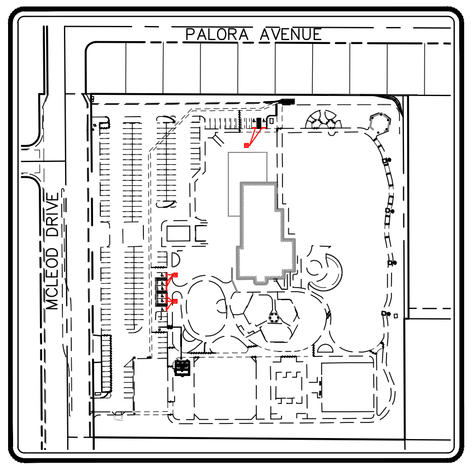

KEY MAP
SCALE: NTS

GRADING CONSTRUCTION NOTES:

1. CONSTRUCT A-CURB PER CCAUSD #219.
2. CONSTRUCT L-CURB PER CCAUSD #216.
3. CONSTRUCT 4' WIDE SIDEWALK PER CCAUSD #234.
4. CONSTRUCT 6'-12' WIDE (SEE SHEET C1.7 FOR WIDTH) SIDEWALK PER CCAUSD #234.
5. ADJUST EXISTING WATER VALVE CONCRETE COLLARS TO NEW GRADE PER UDACS PLATE NO. 39.
6. REMOVE EXISTING AC TO SUBGRADE AND RESURFACE DRIVE AISLE – 3" RUBBERIZED ASPHALT (SPECIFICATIONS BY OTHERS) PER DETAIL 2 ON SHEET C1.5.
7. REMOVE EXISTING AC TO SUBGRADE AND RESURFACE PARKING AREA – 2.5" RUBBERIZED ASPHALT (SPECIFICATIONS BY OTHERS) PER DETAIL 2 ON SHEET C1.5.
8. REMOVE EXISTING VALLEY GUTTER AND CONSTRUCT NEW 4' VALLEY GUTTER PER DETAIL 1 ON SHEET C1.5.
9. SAWCUT LINE, REMOVE, REPLACE AND MATCH EXISTING AC, CURB, GUTTER, AND SIDEWALK (CURB, GUTTER, AND SIDEWALK TO BE REMOVED, REPLACED TO NEAREST EXPANSION JOINT & MATCH EX. ELEVATION).
10. CONSTRUCT 0"-CURB.
11. INSTALL PRECAST BUMPER BLOCK PER CCAUSD #238.
12. PROTECT EXIST. FENCE, POLES AND TENNIS COURT EDGE IN PLACE.
13. CONSTRUCT 1.5' HIGH (ABOVE TC ELEV.) STACKABLE LANDSCAPE BLOCK RETAINING WALL AT BACK OF CURB (FG BEHIND TOP OF WALL TO BE 2.0" BELOW TOP OF WALL ELEVATION).
14. PREFABRICATED BATHROOM W/ PREFABRICATED 6" CONCRETE SLAB, SEE ARCHITECTURAL PLANS FOR BATHROOM, SLAB & SUBGRADE INFORMATION.
15. CONSTRUCT CURB CUTS IN NEW CURB. WIDTH OF OPENINGS AND SPACING TO BE SAME AS EXISTING CURB (CONCRETE CONTRACTOR TO MEASURE PRIOR TO EX. CURB REMOVAL).
16. REMOVE EXISTING AC TO SUBGRADE, REGRADE SUBGRADE TO PROPOSED ELEVATIONS AND INSTALL PARKING AREA – 2.5" RUBBERIZED ASPHALT (SPECIFICATIONS BY OTHERS) PER DETAIL 2 ON SHEET C1.5.
17. CONSTRUCT 1' BERM PER DETAIL 5 ON SHEET C1.5.

ESTIMATED EARTHWORK QUANTITES:

CUT	0 Cu. Yd.
FILL	67 Cu. Yd.
NET(FILL)	67 Cu. Yd.

GRADING LEGEND

- EXISTING RIGHT-OF-WAY LINE/PROPERTY LINE
- PROPOSED PROPERTY LINE
- 2500 EXISTING 5' CONTOUR
- 2505 EXISTING 1' CONTOUR
- PROPOSED STACKABLE LANDSCAPE BLOCK RETAINING WALL
- PROPOSED FLOW LINE
- PROPOSED GRADE BREAK
- 1 / D1 SECTION MARKER-DETAIL NUMBER ABOVE SHEET NUMBER
- (98.72) FL EX. FLOW LINE ELEVATION
- (98.72) FG EX. FINISH GRADE ELEVATION
- (98.72) TC EX. TOP OF CURB ELEVATION
- (98.72) SW EX. SIDEWALK ELEVATION
- 2.50% PROPOSED SLOPE TAG
- 98.72 FG PROPOSED FINISH GRADE ELEVATION
- 98.72 TC PROPOSED TOP OF CURB ELEVATION
- 98.72 FL PROPOSED FLOW LINE ELEVATION
- 98.72 HP PROPOSED HIGH POINT
- 98.72 TF TOP OF FOOTER
- 98.72 TW TOP OF WALL
- 98.72 TB TOP OF BERM
- SAWCUT LINE
- PROPOSED CONCRETE SIDEWALK/VALLEY GUTTER
- PROPOSED ASPHALT & NEW SUBBASE

GRADING NOTES:

1. CARDNO WRG SHALL BE NOTIFIED IMMEDIATELY OF ANY DISCREPANCY IN THE PLANS OR CONDITIONS IN THE FIELD PRIOR TO CONSTRUCTION.
2. THE SITE SHALL BE GRADED IN ACCORDANCE WITH THE APPROVED GEOTECHNICAL REPORT #302864006 PREPARED BY NINYO & MOORE, DATED JUNE 12, 2012.

BASIS OF BEARINGS:

NORTH 00°09'56" WEST, BEING THE CENTERLINE OF A PORTION OF MOHAVE ROAD AS SHOWN BY MAP IN THE OFFICE OF THE CLARK COUNTY, NEVADA RECORDER IN FILE 44, PAGE 62 OF PARCEL MAPS, OFFICIAL RECORDS, CLARK COUNTY, NEVADA.

BENCHMARK:

CLARK COUNTY VERTICAL STATION 6C11 12S6, RIVET AND PLATE IN TOP OF CURB AT THE NORTHEAST CORNER OF MCLEOD DRIVE AND PALORA AVENUE.

ELEVATION:
FEET = 1873.92' (NAVD88)
METERS = 571.171 M (NAVD88)

CLARK COUNTY
DEPARTMENT OF PUBLIC WORKS
DEVELOPMENT REVIEW

ACCEPTANCE OF PLANS FOR FILING

BY: _____

ACCEPTANCE OF THESE PLANS FOR FILING SHALL NOT BE CONSTRUED TO BE A PERMIT FOR OR AN APPROVAL OF ANY VIOLATION OF ANY OF THE PROVISIONS OF THE STATE OR COUNTY LAWS AND/OR SPECIFICATIONS. CLARK COUNTY SHALL BE HELD FREE FROM DAMAGES WHICH MAY RESULT FROM THE CONSTRUCTION OF THE IMPROVEMENTS FROM THE ENGINEERING DESIGN DEPICTED HEREIN.

NOTE: POWER POLES AND/OR OTHER EXISTING FACILITIES NOT IN PROPER LOCATION BASED ON PROPOSED IMPROVEMENTS SHOWN HEREON WILL BE RELOCATED AT NO EXPENSE TO CLARK COUNTY.

HTE #13-89

REV#	REV. DESCRIPTION	DATE
1	REVISED PARKING BLOCKS PER RFI EMAIL DATED 12/8/2013	12/11/2013

DISCLAIMER NOTE

AVOID HITTING UNDERGROUND WATER MAIN SYSTEM AND STREET LIGHT SYSTEM CONDUIT, YOU CAUSE CALL BEFORE YOU DO UNDERGROUND 1-702-455-7511 CLARK COUNTY TRAFFIC SIGNALS 1-702-229-6511 LAS VEGAS AREA COMPUTERIZED TRAFFIC SYSTEM

Call before you Dig avoid cutting underground utility lines. It's costly. Call 811

AVOID HITTING OVERHEAD POWER LINES. IT'S COSTLY CALL BEFORE YOU DO OVERHEAD 1-702-227-2929

UTILITY LOCATIONS SHOWN HEREON ARE APPROXIMATE ONLY. IT SHALL BE THE CONTRACTOR'S RESPONSIBILITY TO DETERMINE THE EXACT HORIZONTAL AND VERTICAL LOCATION OF ALL EXISTING UNDERGROUND UTILITIES PRIOR TO COMMENCING CONSTRUCTION. NO REPRESENTATION IS MADE THAT ALL EXISTING UTILITIES ARE SHOWN HEREON. THE ENGINEER ASSUMES NO RESPONSIBILITY FOR UTILITIES NOT SHOWN OR UTILITIES NOT SHOWN IN THEIR PROPER LOCATION.

PROFESSIONAL ENGINEER - STATE OF NEVADA
ROBERT F. HARMSMA
Exp: 06/30/15
CIVIL
No. 12855

Cardno WRG
LAS VEGAS
10649 JEFFREYS ST, HENDERSON, NV 89052
TEL: (702) 990-9300 FAX: (702) 990-9305
www.cardnowrg.com
PLANNERS • ENGINEERS • LANDSCAPE ARCHITECTS • SURVEYORS

ISSUED FOR	BY	DATE
		May 23, 2013

OZ ARCHITECTURE
2811 LA CASITA AVE.
LAS VEGAS, NV 89120
PHONE 303.861.5704

CLARK COUNTY
DEPARTMENT OF REAL PROPERTY MANAGEMENT
ACQUISITION, DESIGN, & CONSTRUCTION DIVISION
500 S. GRAND CENTRAL PARKWAY
Las Vegas, Nevada
(702) 455-6731

WINCHESTER CULTURAL CENTER
NEW RESTROOM, SIGHT LIGHTING
AND PARKING REHABILITATION
3130 SOUTH MCLEOD
LAS VEGAS, NV 89121
REFERENCE #: /12001.00
DRAWING TITLE: CIVIL GRADING PLAN

SHEET #
C1.4

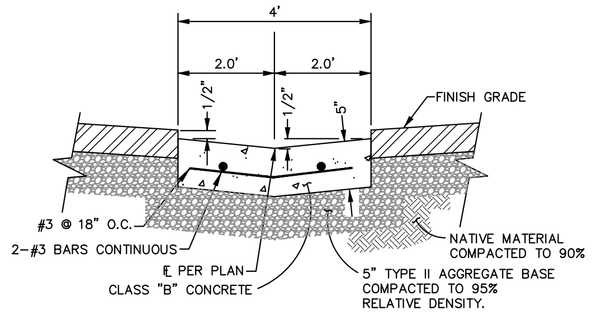

1 / C1.5 4' CONCRETE VALLEY GUTTER
NOT TO SCALE

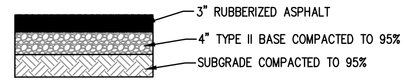

HEAVY PAVEMENT SECTION (DRIVE AISLE)

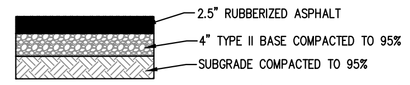

LIGHT PAVEMENT SECTION (PARKING AREA)

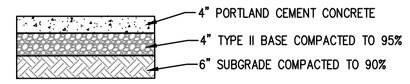

CONCRETE PAVEMENT SECTION

PAVEMENT SECTIONS SHALL CONFORM TO GEOTECHNICAL REPORT BY: NINYO & MOORE
DATED: JUNE 12, 2012
PROJECT NO.: 302864006

2 / C1.5 PAVEMENT SECTIONS
NOT TO SCALE

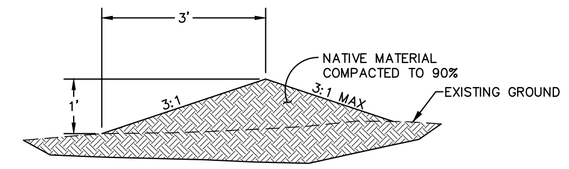

5 / C1.5 1' BERM SECTION
NOT TO SCALE

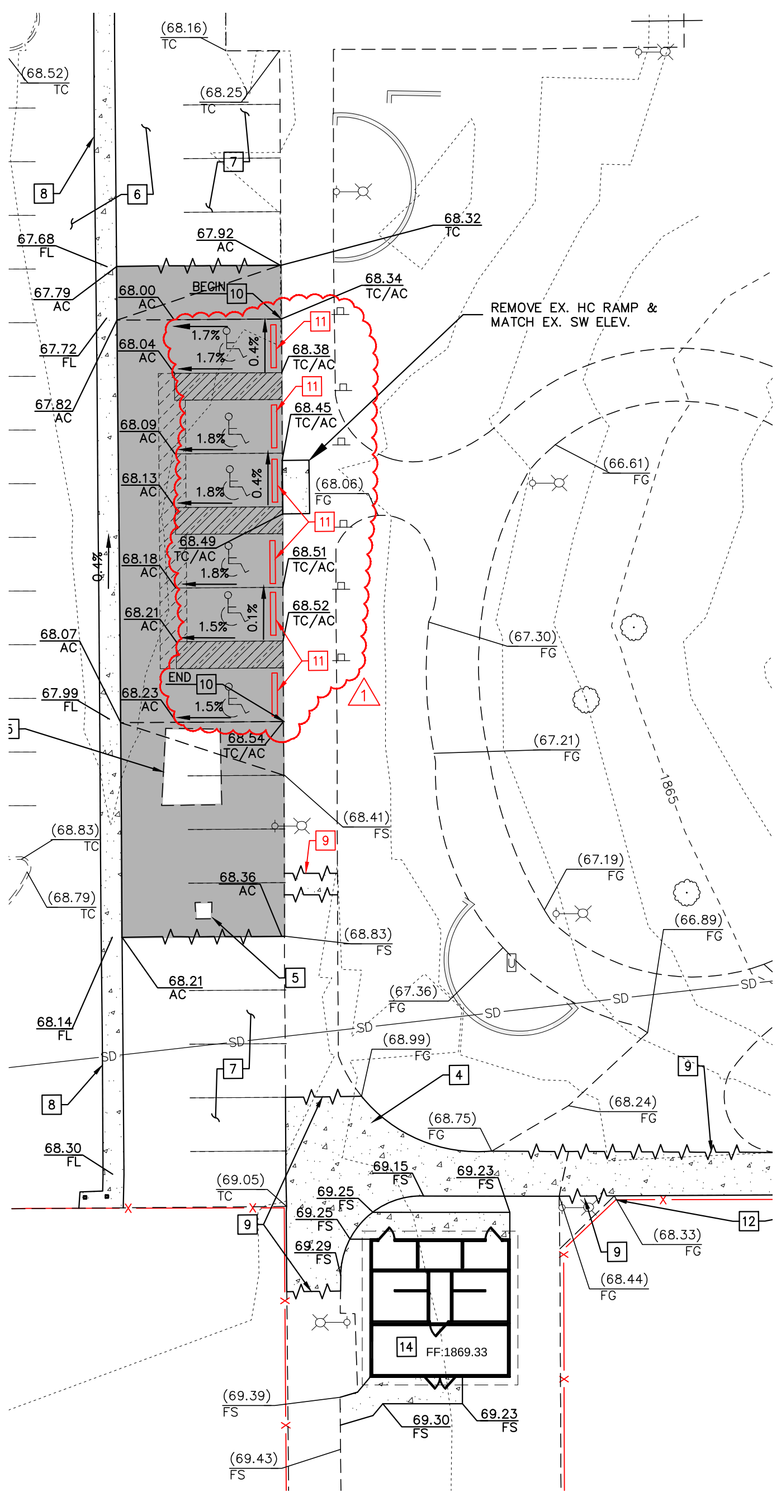

3 / C1.5 SOUTH ADA PARKING DETAIL
SCALE: 1"=20'

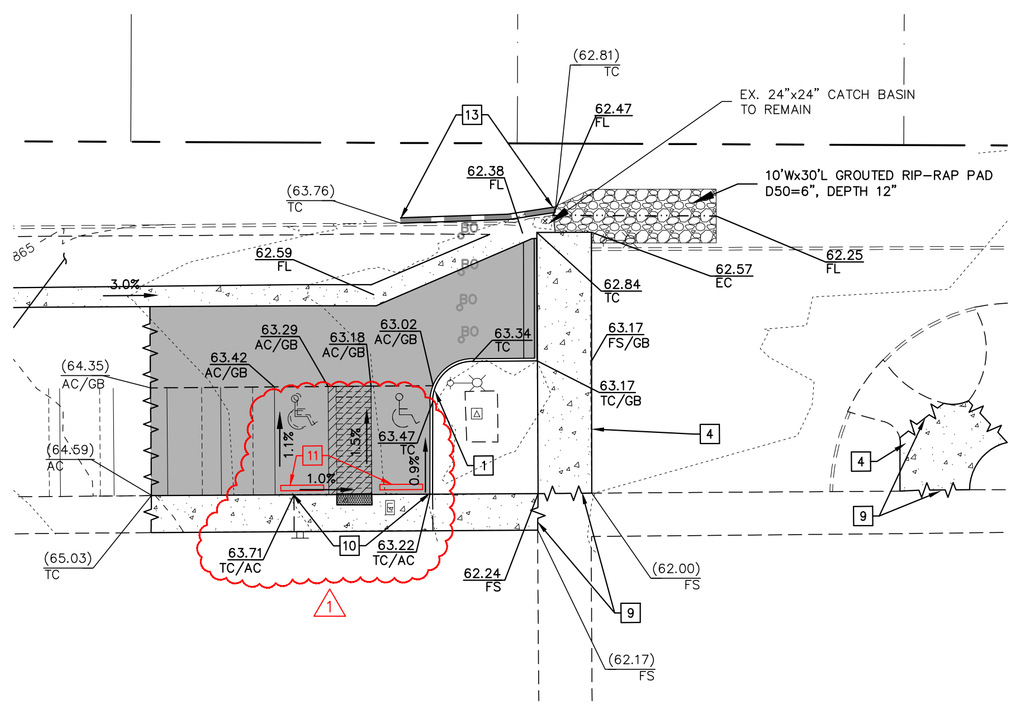

4 / C1.5 NORTH ADA PARKING AREA
SCALE: 1"=20'

GRADING LEGEND

- EXISTING RIGHT-OF-WAY LINE/PROPERTY LINE
- PROPOSED PROPERTY LINE
- 2500 EXISTING 5' CONTOUR
- 2505 EXISTING 1' CONTOUR
- PROPOSED STACKABLE LANDSCAPE BLOCK RETAINING WALL
- PROPOSED FLOW LINE
- PROPOSED GRADE BREAK
- 1 / D1 SECTION MARKER-DETAIL NUMBER ABOVE SHEET NUMBER
- (98.72) FL EX. FLOW LINE ELEVATION
- (98.72) FG EX. FINISH GRADE ELEVATION
- (98.72) TC EX. TOP OF CURB ELEVATION
- (98.72) SW EX. SIDEWALK ELEVATION
- 2.50% PROPOSED SLOPE TAG
- 98.72 FG PROPOSED FINISH GRADE ELEVATION
- 98.72 TC PROPOSED TOP OF CURB ELEVATION
- 98.72 FL PROPOSED FLOW LINE ELEVATION
- 98.72 HP PROPOSED HIGH POINT
- 98.72 TF TOP OF FOOTER
- 98.72 TW TOP OF WALL
- SAWCUT LINE
- PROPOSED CONCRETE SIDEWALK/VALLEY GUTTER
- PROPOSED ASPHALT & NEW SUBBASE

GRADING CONSTRUCTION NOTES:

1. CONSTRUCT A-CURB PER CCAUSD #219.
2. CONSTRUCT L-CURB PER CCAUSD #216.
3. CONSTRUCT 4' WIDE SIDEWALK PER CCAUSD #234.
4. CONSTRUCT 6'-12' WIDE (SEE SHEET C1.7 FOR WIDTH) SIDEWALK PER CCAUSD #234.
5. ADJUST EXISTING WATER VALVE CONCRETE COLLARS TO NEW GRADE PER UDACS PLATE NO. 39.
6. REMOVE EXISTING AC TO SUBGRADE AND RESURFACE DRIVE AISLE – 3" RUBBERIZED ASPHALT (SPECIFICATIONS BY OTHERS) PER DETAIL 2 ON SHEET C1.5.
7. REMOVE EXISTING AC TO SUBGRADE AND RESURFACE PARKING AREA – 2.5" RUBBERIZED ASPHALT (SPECIFICATIONS BY OTHERS) PER DETAIL 2 ON SHEET C1.5.
8. REMOVE EXISTING VALLEY GUTTER AND CONSTRUCT NEW 4' VALLEY GUTTER PER DETAIL 1 ON SHEET C1.5.
9. SAWCUT LINE, REMOVE, REPLACE AND MATCH EXISTING AC, CURB, GUTTER, AND SIDEWALK (CURB, GUTTER, AND SIDEWALK TO BE REMOVED, REPLACED TO NEAREST EXPANSION JOINT & MATCH EX. ELEVATION).
10. CONSTRUCT 0"-CURB.
11. INSTALL PRECAST BUMPER BLOCK PER CCAUSD #238.
12. PROTECT EXIST. FENCE, POLES AND TENNIS COURT EDGE IN PLACE.
13. CONSTRUCT 1.5' HIGH (ABOVE TC ELEV.) STACKABLE LANDSCAPE BLOCK RETAINING WALL AT BACK OF CURB (FG BEHIND TOP OF WALL TO BE 2.0" BELOW TOP OF WALL ELEVATION).
14. PREFABRICATED BATHROOM W/ PREFABRICATED 6" CONCRETE SLAB, SEE ARCHITECTURAL PLANS FOR BATHROOM, SLAB & SUBGRADE INFORMATION.
15. CONSTRUCT CURB CUTS IN NEW CURB. WIDTH OF OPENINGS AND SPACING TO BE SAME AS EXISTING CURB (CONCRETE CONTRACTOR TO MEASURE PRIOR TO EX. CURB REMOVAL).
16. REMOVE EXISTING AC TO SUBGRADE, REGRADE SUBGRADE TO PROPOSED ELEVATIONS AND INSTALL PARKING AREA – 2.5" RUBBERIZED ASPHALT (SPECIFICATIONS BY OTHERS) PER DETAIL 2 ON SHEET C1.5.
17. CONSTRUCT 1' BERM PER DETAIL 5 ON SHEET C1.5.

GRADING NOTES:

1. CARDNO WRG SHALL BE NOTIFIED IMMEDIATELY OF ANY DISCREPANCY IN THE PLANS OR CONDITIONS IN THE FIELD PRIOR TO CONSTRUCTION.
2. THE SITE SHALL BE GRADED IN ACCORDANCE WITH THE APPROVED GEOTECHNICAL REPORT #302864006 PREPARED BY NINYO & MOORE, DATED JUNE 12, 2012.

BASIS OF BEARINGS:

NORTH 00°09'56" WEST, BEING THE CENTERLINE OF A PORTION OF MOHAVE ROAD AS SHOWN BY MAP IN THE OFFICE OF THE CLARK COUNTY, NEVADA RECORDER IN FILE 44, PAGE 62 OF PARCEL MAPS, OFFICIAL RECORDS, CLARK COUNTY, NEVADA.

BENCHMARK:

CLARK COUNTY VERTICAL STATION 6C11 12S6, RIVET AND PLATE IN TOP OF CURB AT THE NORTHEAST CORNER OF MCLEOD DRIVE AND PALORA AVENUE.

ELEVATION:
FEET = 1873.92' (NAVD88)
METERS = 571.171 M (NAVD88)

HTE #13-89

REV#	REV. DESCRIPTION	DATE
1	REVISED PARKING BLOCKS PER RFI EMAIL DATED 12/8/2013	12/11/2013

DISCLAIMER NOTE

AVOID HITTING UNDERGROUND POWER LINES, GAS LINES, WATER LINES AND OTHER UTILITY SYSTEMS. DAMAGE, THE COSTLY!
CALL BEFORE YOU DIG UNDERGROUND
1-702-455-7511
CLARK COUNTY TRAFFIC SIGNALS
1-702-229-6611
LAS VEGAS AREA CLARK COUNTY STREET TRAFFIC SYSTEM

Call before you Dig
Avoid cutting underground utility lines. It's costly.
Call 811

AVOID HITTING OVERHEAD POWER LINES. IT'S COSTLY!
CALL BEFORE YOU DO OVERHEAD
1-702-227-2920

UTILITY LOCATIONS SHOWN HEREON ARE APPROXIMATE ONLY. IT SHALL BE THE CONTRACTOR'S RESPONSIBILITY TO DETERMINE THE EXACT HORIZONTAL AND VERTICAL LOCATION OF ALL EXISTING UNDERGROUND UTILITIES PRIOR TO COMMENCING CONSTRUCTION. NO REPRESENTATION IS MADE THAT ALL EXISTING UTILITIES ARE SHOWN HEREON. THE ENGINEER ASSUMES NO RESPONSIBILITY FOR UTILITIES NOT SHOWN OR UTILITIES NOT SHOWN IN THEIR PROPER LOCATION.

PROFESSIONAL ENGINEER - STATE OF NEVADA
ROBERT F. HARMSMA
Exp: 06/30/15
CIVIL
No. 12855

Cardno WRG
LAS VEGAS
10649 JEFFREYS ST, HENDERSON, NV 89052
TEL: (702) 990-9300 FAX: (702) 990-9305
www.cardnowrg.com
PLANNERS • ENGINEERS • LANDSCAPE ARCHITECTS • SURVEYORS

ISSUED FOR	BY	DATE
		May 23, 2013

OZ ARCHITECTURE
2811 LA CASITA AVE.
LAS VEGAS, NV 89120
PHONE 303.861.5704

CLARK COUNTY
DEPARTMENT OF REAL PROPERTY MANAGEMENT
ACQUISITION, DESIGN, & CONSTRUCTION DIVISION
500 S. GRAND CENTRAL PARKWAY
Las Vegas, Nevada
(702) 455-6731

WINCHESTER CULTURAL CENTER
NEW RESTROOM, SIGHT LIGHTING AND PARKING REHABILITATION
3130 SOUTH MCLEOD
LAS VEGAS, NV 89121

REFERENCE #: /12001.00
DRAWING TITLE: CIVIL DETAIL SHEET

SHEET #
C1.5