Department of Administrative Services
Purchasing and Contracts

500 S Grand Central Pky 4th Fl • Box 551217 • Las Vegas NV 89155-1217
(702) 455-2897 • Fax (702) 386-4914

Sabra Smith Newby, Chief Administrative Officer
Adleen B. Stidhum, Purchasing Administrator

CLARK COUNTY, NEVADA
BID NO. 603304-14
FIRE STATION NO. 22 APPARATUS BAY ENTRY MODIFICATIONS

May 20, 2014

ADDENDUM NO. 3

INVITATION TO BID

1. The Bid opening date of May 22, 2014 at 2:15:00 p.m. **has been changed to May 28, 2014 at 2:15:00 p.m.**

DRAWINGS

2. At sheet A102, Detail D2: Revise dimensions at new apparatus bay door, as clouded with Delta 1 on attached SK-01.

3. At sheet A103, Details D1, D2, and E1: Revise to include factory attached 6-inch tube steel, as clouded with Delta 1 on attached SK-02.

4. At sheet A104, Detail E3: Revise to include factory attached 6-inch tube steel, as clouded with Delta 1 on attached SK-03.

5. At sheet A104, Detail E3: Revise detail callout B2/A422 to E2/A1.03, as clouded with Delta 1 on attached SK-03.

Except as modified herein, all other bid specifications, terms, conditions and special provisions shall remain the same.

ISSUED BY:

SANDY MOODY-UPTON
Purchasing Analyst

Attachment(s): SK-01 (1 pg.); SK-02 (1 pg.); SK-03 (1 pg.)

Cc: Chuck James, Real Property Management
Brian Connolly, Real Property Management
Coleen Lyum, Real Property Management
Dwayne Eshenbaugh, Novus Architecture

BOARD OF COUNTY COMMISSIONERS
STEVE SISOLAK, Chairman • LARRY BROWN, Vice Chairman
SUSAN BRAGER • TOM COLLINS • CHRIS GIUNCHIGLIANI • MARY BETH SCOW • LAWRENCE WEEKLY
DONALD G. BURNETTE, County Manager

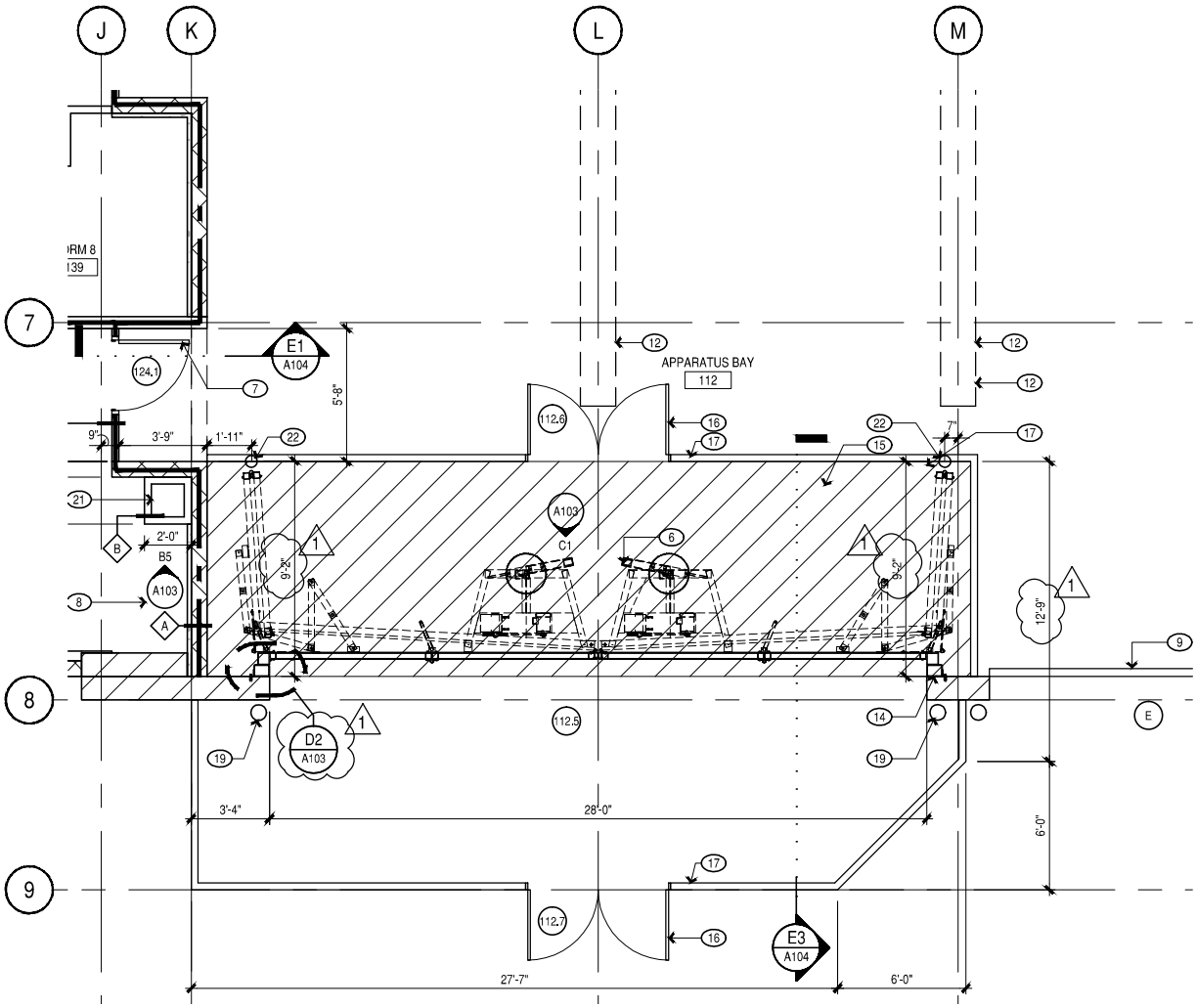

D2 ENLARGED FLOOR PLAN

D2/A102

1/8" = 1'-0"

NOVUS

CONNECT I CREATE I CULTIVATE

8 East Charleston Boulevard
Las Vegas, Nevada 89104
P. 702.522.9292
F. 702.541.9596

FIRE STATION No. 22
APPARATUS BAY ENTRY MODIFCATIONS
6745 W. FLAMINGO ROAD
LAS VEGAS, NEVADA

ENLARGED FLOOR PLAN
D2/A102

DRAWN BY	CC	SCALE	VARIES
REVIEWED BY	DE		
DATE ISSUED	5.19.2014		SK-01
PROJECT NO.	12-028		NO.

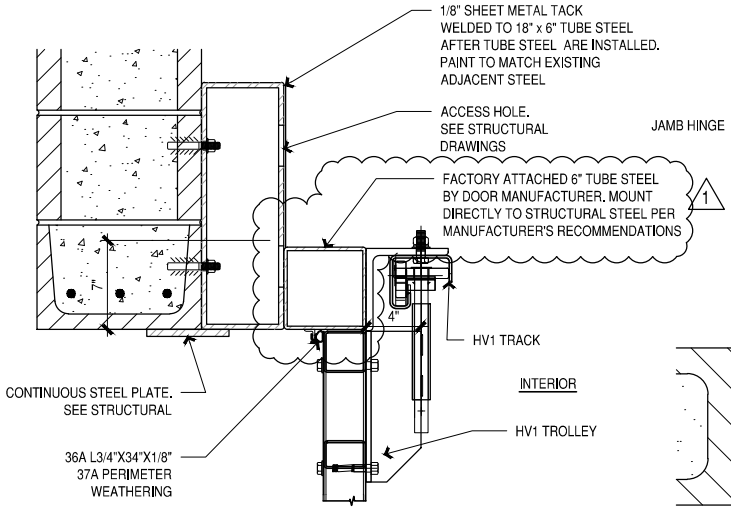

D1 DOOR TROLLEY DETAIL

D1/A103 1" = 1'-0"

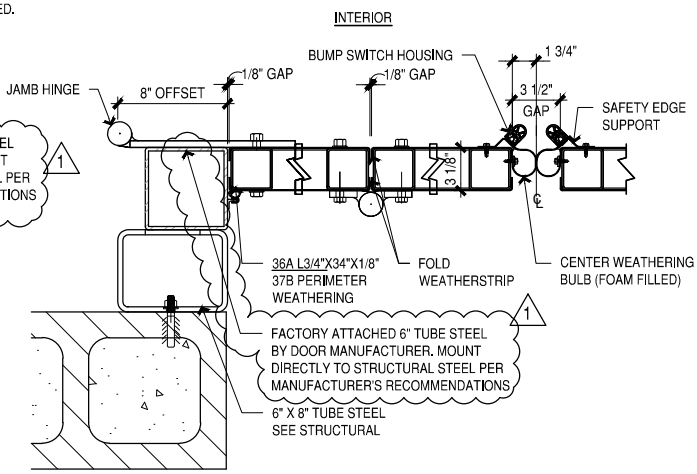

D2 HORIZONTAL SECTION

D2/A103 1" = 1'-0"

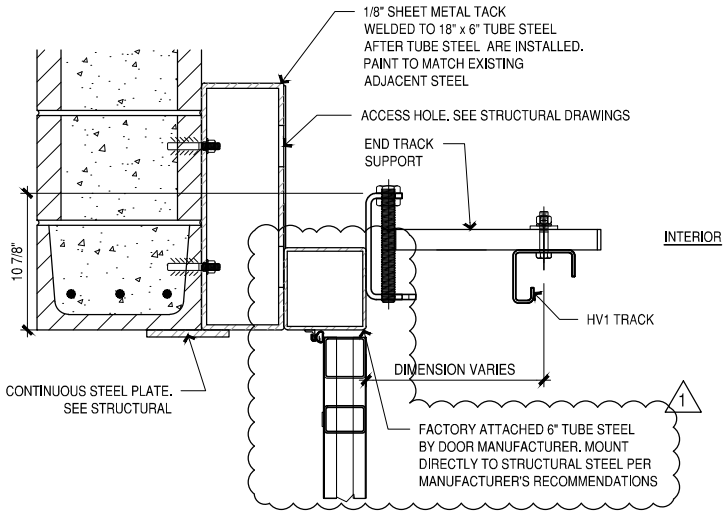

E1 DOOR HINGE AND TRACK HANGER

E1/A103 1" = 1'-0"

NOVUS

CONNECT I CREATE I CULTIVATE

8 East Charleston Boulevard
Las Vegas, Nevada 89104

P. 702.522.9292
F. 702.541.9596

DETAILS FROM SHEET A103

FIRE STATION No. 22
APPARATUS BAY ENTRY MODIFCATIONS
6745 W. FLAMINGO ROAD
LAS VEGAS, NEVADA

DRAWN BY	CC	SCALE	VARIES
REVIEWED BY	DE		
DATE ISSUED	5.19.2014		SK-02
PROJECT NO.	12-028		NO.

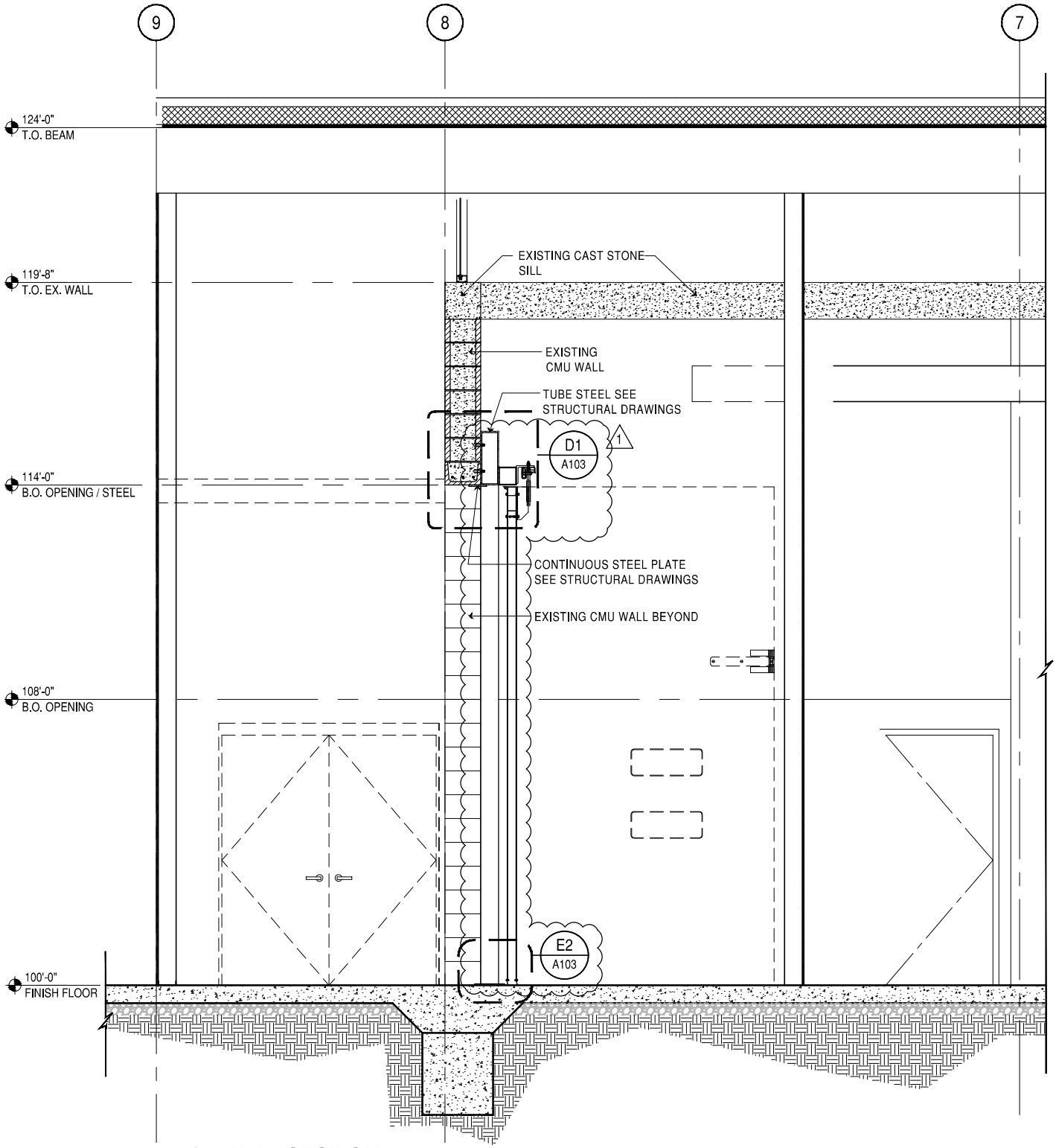

E3 WALL SECTION
E3/A103
1/4" = 1'-0"

NOVUS

CONNECT I CREATE I CULTIVATE

8 East Charleston Boulevard
Las Vegas, Nevada 89104
P. 702.522.9292
F. 702.541.9596

FIRE STATION No. 22
APPARATUS BAY ENTRY MODIFCATIONS
6745 W. FLAMINGO ROAD
LAS VEGAS, NEVADA

WALL SECTION
E3/A104

DRAWN BY	CC	SCALE	VARIES
REVIEWED BY	DE		
DATE ISSUED	5.19.2014		SK-03
PROJECT NO.	12-028		NO.