Department of Administrative Services
Purchasing and Contracts

500 S Grand Central Pky 4th Fl • Box 551217 • Las Vegas NV 89155-1217
(702) 455-2897 • Fax (702) 386-4914

Sabra Smith Newby, Chief Administrative Officer
Adleen B. Stidhum, Purchasing Manager

CLARK COUNTY, NEVADA
BID NO. 603520-14
F4 PATRICK LATERAL, F4 CHANNEL TO 400' WEST

December 18, 2014

ADDENDUM NO. 1

INVITATION TO BID

1. The Bid Opening date of December 22, 2014 at 2:15:00 p.m. **has been changed to December 29, 2014 at 2:15:00 p.m.**

BID FORM

2. **Delete** existing Bid Form, Pages 4-1 through 4-5 and **replace** with the attached Revised Bid Form.

SPECIAL PROVISIONS

3. SECTION 502 CONCRETE STRUCTURES

   A. SUBSECTION 502.04.01 MEASUREMENT

   The following paragraph is added to this subsection:

   The quantity of RCP plug will be measured per each.

   B. SUBSECTION 502.05.01 PAYMENT

   The following paragraph is added to this subsection:

   The contract price bid per each for RCP plug shall be full compensation for furnishing and placing all materials and labor, including but not limited to concrete, reinforcing steel, dowels, forming, excavation, backfill, protection and restoration, if damaged, of all existing facilities and improvements required to remain in place, and all other items necessary to complete the work as shown on the plans, as specified herein and as directed by the Engineer.

4. SECTION 603 REINFORCED CONCRETE PIPE

   A. SUBSECTION 603.04.01 MEASUREMENT

   The following paragraph is added to this subsection:

   The quantity of plywood plug will be measured per each.

   B. SUBSECTION 603.05.01 PAYMENT

BOARD OF COUNTY COMMISSIONERS
STEVE SISOLAK, Chairman • LARRY BROWN, Vice Chairman
SUSAN BRAGER • TOM COLLINS • CHRIS GIUNCHIGLIANI • MARY BETH SCOW • LAWRENCE WEEKLY
DONALD G. BURNETTE, County Manager

The following paragraph is added to this subsection:

The contract price bid per each for plywood plug shall be full compensation for furnishing and placing all materials and labor, including but not limited to excavation, backfill, protection and restoration, if damaged, of all existing facilities and improvements required to remain in place, and all other items necessary to complete the work as shown on the plans, as specified herein and as directed by the Engineer.

5. CONTRACT DRAWINGS

The following sheets are **not** being reissued with this addendum. Specific details are attached to this addendum. The contractor shall make note of the following changes, which will be reflected in the "Issued for Construction" Plans.

SHEET NO. 5

A. PRE-FABRICATED WYE, STA "P" 26+65.68, 20' RT – Changed RCP size to 24-inch. Added slope for RCP stub at 8.08 percent. Note added to cover end of RCP with 1-inch plywood. See details shown on attached sheet.

B. PRE-FABRICATED WYE, STA "P" 23+29.66, 20' RT – Added slopes for south RCP stub at 6.00 percent and north RCP stub at 5.25 percent. Note added to cover end of north stub with 1-inch plywood. Note added to plug south stub with RCP plug per detail. See details shown on attached sheet.

Except as modified herein, all other bid specifications, terms, conditions, and special provisions shall remain the same.

ISSUED BY:

THOMAS E. BOLDT, C.P.M.
Senior Purchasing Analyst

Attachment(s): Revised Bid Form pages 4-1 through 4-5
L-1967 Phase 1 addendum 1 – Layout1 8x11

cc: Brooke Prescia, P.E., Public Works
Mike Mamer, Public Works
Cindy Beauchamp, Public Works

CLARK COUNTY, NEVADA

BID FORM

BID NO. 603520-14
F4 PATRICK LATERAL, F4 CHANNEL TO 400' WEST
PWP NUMBER: CL-2015-76
Revised per Addendum No. 1

_____
(NAME)

_____
(ADDRESS)

I, THE UNDERSIGNED BIDDER:

1. Agree, if awarded this Contract, I will complete all work for which a Contract may be awarded and to furnish any and all labor, equipment, materials, transportation, and other facilities required for the services as set forth in the Bidding and Contract Documents.

2. Have examined the Contract Documents and the site(s) for the proposed work and satisfied themselves as to the character, quality of work to be performed, materials to be furnished and as to the requirements of the specifications.

3. Have completed all information in the blanks provided and have submitted the following within this Bid:

   a) Have listed the name of each Subcontractor which will be paid an amount exceeding five percent (5%) of the Total Base Bid amount.

   b) Attached a bid security (in the form of, at my option, a Cashiers Check, Certified Check, Money Order, or Bid Bond in favor of the Owner in the amount of five percent (5%) of the Total Base Bid amount.

   c) If claiming the preference eligibility, I have submitted a valid Certificate of Eligibility with this Bid.

4. I acknowledge that if I am one of the three apparent low bidders at the bid opening, and if I have listed Subcontractor(s) pursuant to NRS 338.141, I must submit Bid Attachment 2 within two-hours after completion of the bid opening pursuant to the Instructions to Bidders, forms must be submitted via hand delivery or email to COUNTYPURCHASING@CLARKCOUNTYNV.GOV and I understand that hand delivery is recommended, and Owner shall not be responsible for lists received after the two-hour time limit, regardless of the reason. I understand that submission after the two-hour time limit is not allowed and will be returned to me and the bid will be deemed non-responsive. I acknowledge that for:

   a) Projects **UNDER** $5,000,000

      I need to list **only those Subcontractors** that will provide labor/improvements exceeding $50,000.00.

5. I acknowledge that if I am one of the three apparent low bidders at bid opening, and if I have submitted a valid Certificate of Eligibility as described in 3.c above, I must submit Bid Attachment 3, Affidavit Pertaining to Preference Eligibility, within two-hours after completion of the bid opening pursuant to the General Conditions. The forms must be submitted via hand delivery or email to COUNTYPURCHASING@CLARKCOUNTYNV.GOV and I understand hand delivery is recommended. Owner shall not be responsible for lists received after the two-hour time limit, regardless of the reason. I understand that submission of the Certificate after the two-hour time limit is not allowed and it will be returned to me and the bid will be deemed non-responsive.

6. I acknowledge that if notified that I am the low bidder, I must submit the Disclosure of Ownership/Principals form within 24-hours of request.

7. I acknowledge that my bid is based on the current State of Nevada prevailing wages.

8. I acknowledge that I have not breached a public work contract for which the cost exceeds $25,000,000, within the preceding year, for failing to comply with NRS 338.147 and the requirements of a contract in which I have submitted within 2 hours of the bid opening an Affidavit pertaining to preference eligibility.

9. Upon faxed or mailed receipt of a Notice of Intent to Award the Contract, I will provide the following submittals within seven business days from receipt of the Notice:

   a) Performance Bond, Labor and Material Payment Bond and a Guaranty Bond, for 100% of the Contract amount as required.

   b) Certificates of insurance for Commercial General Liability in the amount of $1,000,000, Automobile Liability in the amount of $1,000,000, and Workers' Compensation insurance issued by an insurer qualified to underwrite Workers' Compensation insurance in the State of Nevada, as required by law.

10. I acknowledge that if I do not provide the above submittals on or before the seventh business day after receipt of the Notice of Intent to Award; or do not keep the bonds or insurance policies in effect, or allow them to lapse during the performance of the Contract; I will pay over to the Owner the amount of **$1,500** per day as liquidated damages.

11. I confirm this bid is genuine and is not a sham or collusive, or made in the interest of, or on behalf of any person not herein named, nor that the Bidder in any manner sought to secure for themselves an advantage over any bidders.

12. I further propose and agree that if my bid is accepted, I will commence to perform the work called for by the contract documents on the date specified in the Notice to Proceed and I will complete all work within the calendar days **specified in the General Conditions.**

13. I further propose and agree that I will accept as full compensation for the work to be performed the price written in the Bid Schedule below.

14. I have carefully checked the figures below and the Owner will not be responsible for any error or omissions in the preparation or submission of this Bid.

15. I agree no verbal agreement or conversation with an officer, agent or employee of the owner, either before or after the execution of the contract, shall affect or modify any of the terms or obligations of this Bid.

16. I am responsible to ascertain the number of addenda issued, and I hereby acknowledge receipt of the following addenda:

Addendum No.	_____	dated, _____	Addendum No.	_____	dated, _____
Addendum No.	_____	dated, _____	Addendum No.	_____	dated, _____
Addendum No.	_____	dated, _____	Addendum No.	_____	dated, _____
Addendum No.	_____	dated, _____	Addendum No.	_____	dated, _____
Addendum No.	_____	dated, _____	Addendum No.	_____	dated, _____

17. I agree to perform all work described in the drawings, specifications, and other documents for the amounts quoted below:

BID SCHEDULE

ITEM NUMBER	ITEM DESCRIPTION	APPROX. QUANTITY	UNIT	TOTAL
109.01	CONSTRUCTION CONFLICTS AND ADDITIONAL WORK	1	LS	$ 35,000.00
109.02	HISTORICAL OWNER CAUSED DELAY ALLOWANCE	1	DAY	$ 500.00
109.03	ADDITIONAL AMOUNT OVER $500 A DAY	1	DAY	$
200.01	MOBILIZATION	1	LS	$
202.01	REMOVE HEAVY RIP RAP	53	CY	$
502.01	10'X6' REINFORCED CONCRETE BOX	336	LF	$
502.02	TRANSITION STRUCTURE "P"26+69.68 TO "P"27+19.68	1	LS	$
502.03	10'X6' TO 18" WYE	1	EA	$
502.04	10'X6' TO (2) 18" WYE	1	EA	$
502.05	RCB PLUG	1	EA	

BID SCHEDULE				
ITEM NUMBER	**ITEM DESCRIPTION**	**APPROX. QUANTITY**	**UNIT**	**TOTAL**
502.06	RCP PLUG	1	EA	
603.01	PLYWOOD PLUG	3	EA	
609.01	48" TYPE IA STORM DRAIN MANHOLE	2	EA	$
637.01	DUST CONTROL	45	DAY	$
			TOTAL BASE BID	$

SUBCONTRACTORS EXCEEDING 5% OF BASE BID AMOUNT

PRIME CONTRACTOR MUST INCLUDE ITS NAME ON THIS LIST IF HE OR SHE INTENDS TO PERFORM ANY OF THE LABOR OR PORTIONS OF THE PUBLIC WORK.
THE CONTRACTOR SHALL NOT SUBSTITUTE A SUBCONTRACTOR WHO IS NAMED IN THIS BID, PURSUANT TO NEVADA REVISED STATUTE 338.141. THE FOLLOWING SUBCONTRACTORS SHALL BE UTILIZED. A BIDDER, WHICH FAILS TO LIST A SUBCONTRACTOR (S), REPRESENTS THAT NO SUBCONTRACTOR(S) MEET THE STATUTORY REQUIREMENTS.

DESCRIPTION OF WORK	CONTRACTORS' NAME(S)	*BEG	*ETHNICITY

DESCRIPTION OF WORK	SUBCONTRACTORS' FIRM NAME(S)	*BEG	*ETHNICITY

Legal Name of Firm as it Would Appear in Contract

Signature of Bidder (Authorized Representative)

Today's Date

**Reference Instructions to Bidders for Definitions (Section 7.3(d)).*

18. BUSINESS ENTERPRISE INFORMATION:

The Prime Contractor submitting this Bid is a ☐ MBE ☐ WBE ☐ PBE ☐ SBE ☐ VET ☐ DVET ☐ ESB as defined in the Instructions to Bidders.

19. BUSINESS ETHNICITY INFORMATION:

The Prime Contractor submitting the Bid Ethnicity is ☐ Caucasian (CX) ☐ African American (AA) ☐ Hispanic American (HA) ☐ Asian Pacific American (AX) ☐ Native American (NA) ☐ Other as defined in the Instructions to Bidders.

20. BIDDERS' PREFERENCE Is the Bidder claiming Bidders' Preference?

☐ Yes If yes, the Bidder acknowledges that he/she is required to follow the requirements set forth in the Affidavit (Bid Attachment 3).

☐ No **I do not have a Certificate of Eligibility to receive preference in bidding.**

21. _____
LEGAL NAME OF FIRM AS IT WOULD APPEAR IN CONTRACT

_____
ADDRESS OF FIRM

_____
CITY, STATE, ZIP CODE

_____ _____
TELEPHONE NUMBER FAX NUMBER

NEVADA STATE CONTRACTORS' BOARD LICENSE INFORMATION:

I certify that the license(s) listed below will be the license(s) used to perform the majority of the work on this project.

LICENSE NUMBER: _____

LICENSE CLASS: _____

LICENSE LIMIT: _____

ONE TIME LICENSE LIMIT INCREASE $_____ IF YES, DATE REQUESTED _____

CLARK COUNTY BUSINESS LICENSE NO. _____

STATE OF NEVADA BUSINESS LICENSE NO. _____

_____ _____
AUTHORIZED REPRESENTATIVE (PRINT OR TYPE) E-MAIL ADDRESS

_____ _____
SIGNATURE OF AUTHORIZED REPRESENTATIVE TODAY'S DATE

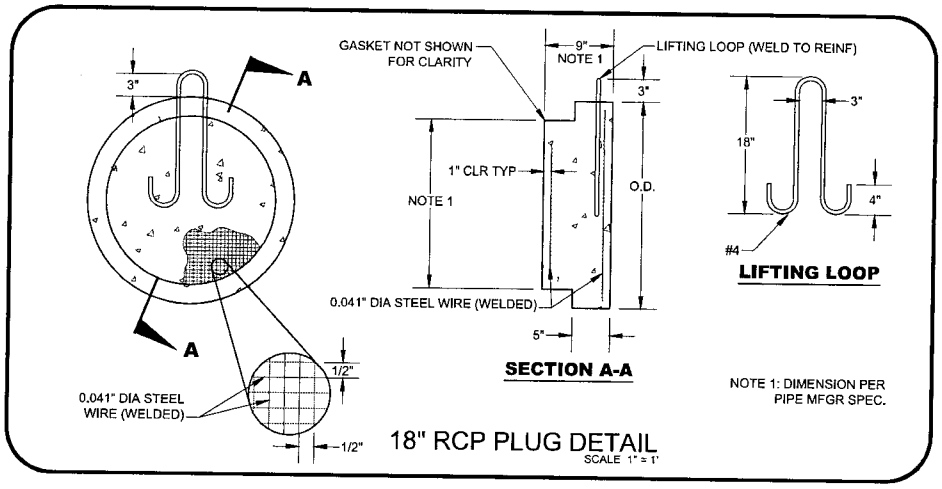
GASKET NOT SHOWN FOR CLARITY
9"
NOTE 1
LIFTING LOOP (WELD TO REINF)
3"
A
A
1" CLR TYP
NOTE 1
O.D.
0.041" DIA STEEL WIRE (WELDED)
5"
SECTION A-A
18"
4"
#4
LIFTING LOOP
1/2"
0.041" DIA STEEL WIRE (WELDED)
1/2"
NOTE 1: DIMENSION PER PIPE MFGR SPEC.
18" RCP PLUG DETAIL
SCALE 1" = 1'

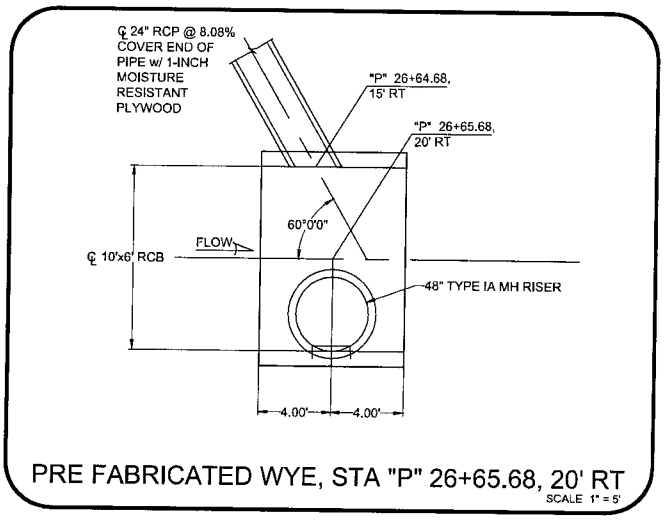
℄ 24" RCP @ 8.08% COVER END OF PIPE w/ 1-INCH MOISTURE RESISTANT PLYWOOD
"P" 26+64.68, 15' RT
"P" 26+65.68, 20' RT
60°0'0"
FLOW
℄ 10'x6' RCB
48" TYPE IA MH RISER
4.00'
4.00'
PRE FABRICATED WYE, STA "P" 26+65.68, 20' RT
SCALE 1" = 5'

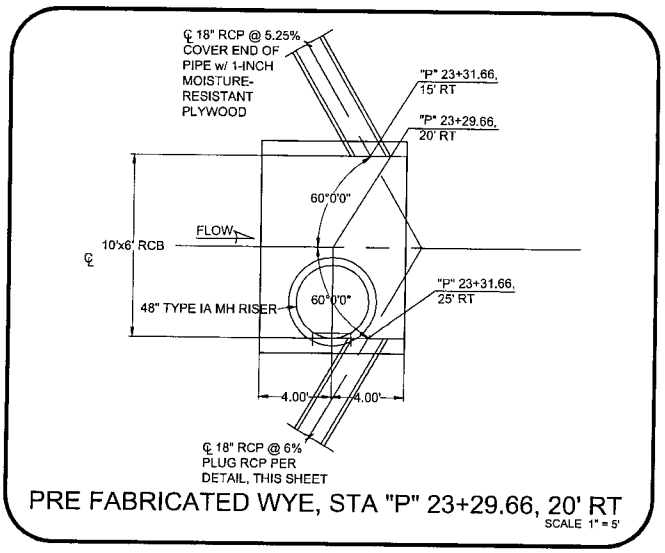
℄ 18" RCP @ 5.25% COVER END OF PIPE w/ 1-INCH MOISTURE-RESISTANT PLYWOOD
"P" 23+31.66, 15' RT
"P" 23+29.66, 20' RT
60°0'0"
FLOW
℄ 10'x6' RCB
"P" 23+31.66, 25' RT
48" TYPE IA MH RISER
60°0'0"
4.00'
4.00'
℄ 18" RCP @ 6% PLUG RCP PER DETAIL, THIS SHEET
PRE FABRICATED WYE, STA "P" 23+29.66, 20' RT
SCALE 1" = 5'