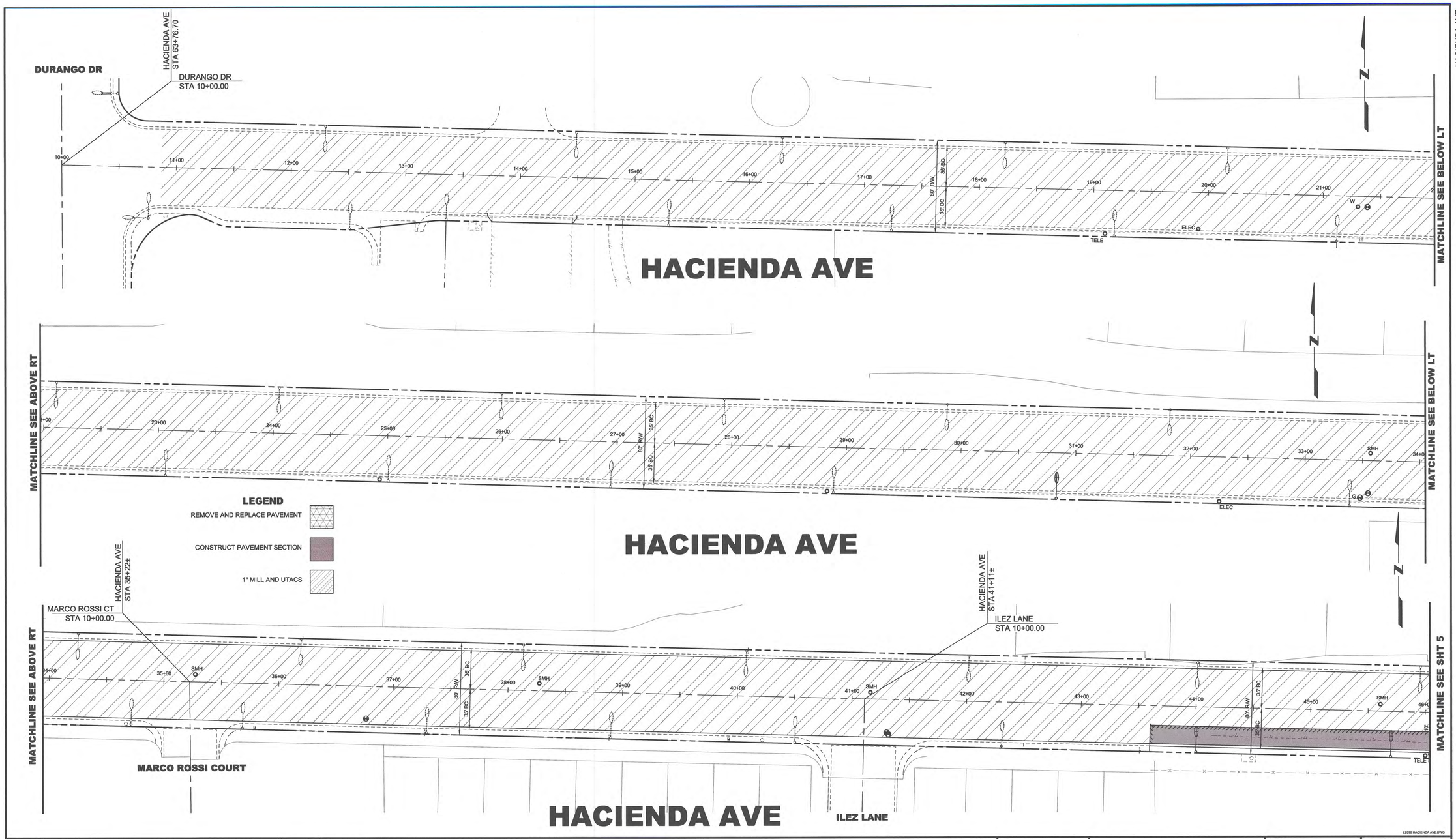

REV No	DATE	DESCRIPTION	APPROVED
1	AUG 2015	PER ADDENDUM No 1	RRR

HACIENDA AVE

PAVEMENT LAYOUT

STA 10+00 TO STA 46+00

CLARK COUNTY, NEVADA, DEPARTMENT OF PUBLIC WORKS

REGISTERED PROFESSIONAL ENGINEER — RICHARD R. ROBINSON — Exp: 12/31/15 — CIVIL — No 23264 — STATE OF NEVADA — 8/27/15

DESIGNED BY:	R ROBINSON
DRAWN BY:	BOB M
CHECKED BY:	R ROBINSON
DATE:	Aug 27, 2015 – 7:50am

SCALE	
HORIZ:	1" = 40'
VERT:	NA
FIELD BOOK	60-21-54
WORK ORDER	D2015-005
PROJECT No.	NONE

SHEET No **4**

N15173A

L-2098

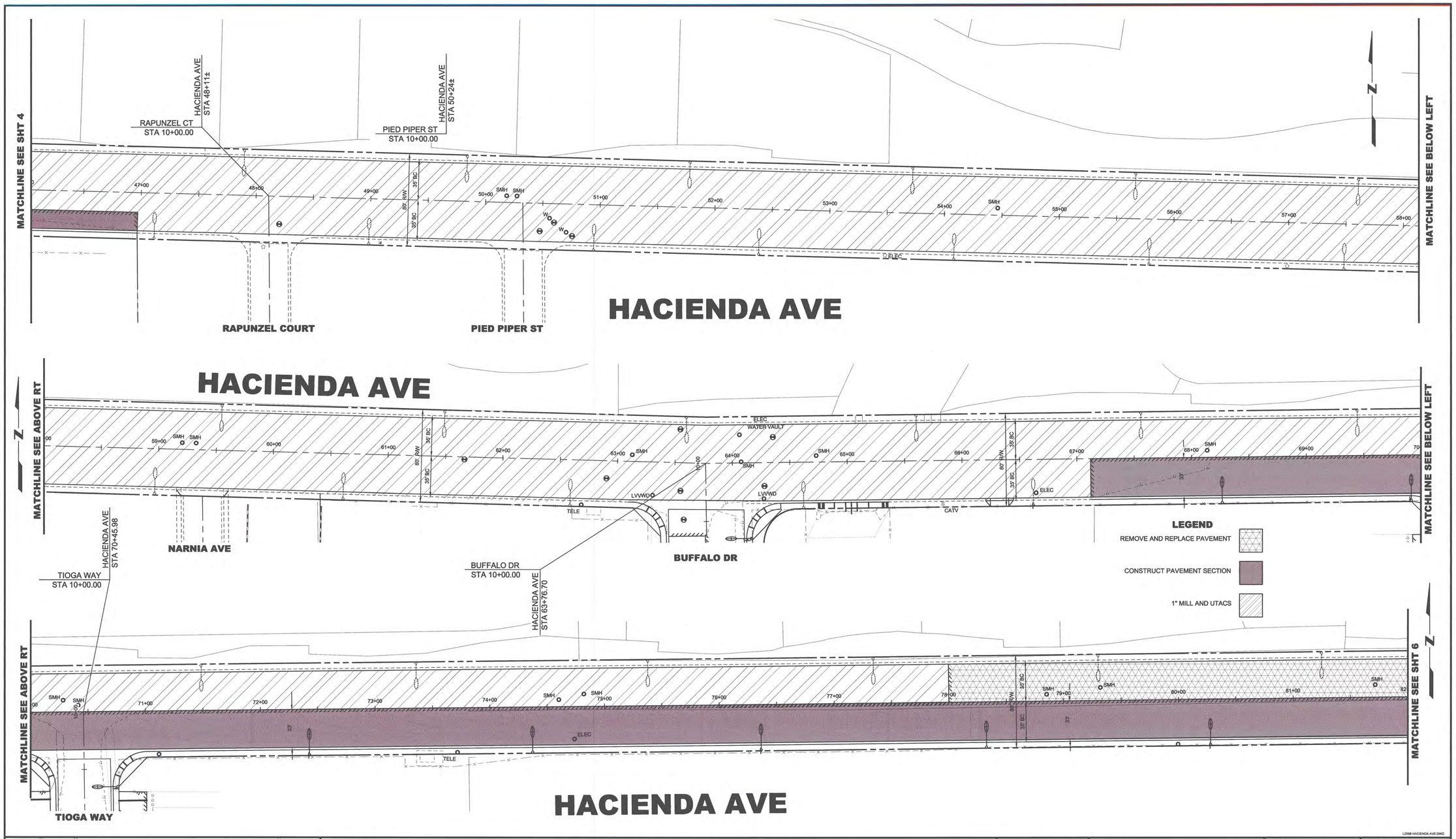

REV No	DATE	DESCRIPTION	APPROVED
1	AUG 2015	PER ADDENDUM No 1	RRR

CLARK COUNTY NEVADA

HACIENDA AVE
PAVEMENT LAYOUT
STA 46+00 TO 82+00
CLARK COUNTY, NEVADA, DEPARTMENT OF PUBLIC WORKS

REGISTERED PROFESSIONAL ENGINEER RICHARD R. ROBINSON Exp: 12/31/15 No 23264 CIVIL STATE OF NEVADA
8/27/15

DESIGNED BY:	R ROBINSON
DRAWN BY:	BOB M
CHECKED BY:	R ROBINSON
DATE:	Aug 27, 2015 – 9:24am

SCALE	
HORIZ:	1" = 40'
VERT:	NA
FIELD BOOK	60-21-54
WORK ORDER	D2015-005
PROJECT No.	NONE

SHEET No **5**

N15173A

L-2098

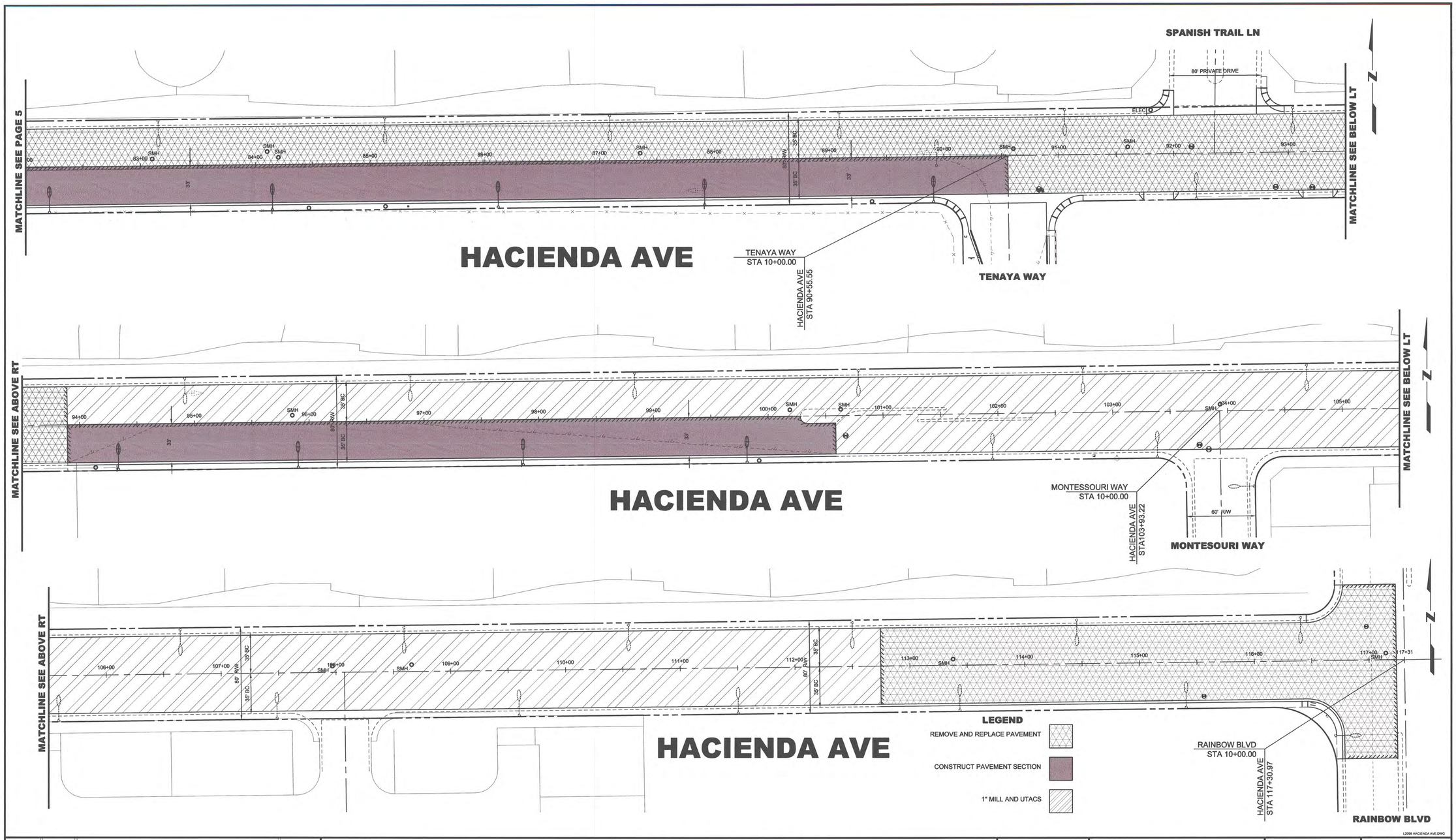

REV No	DATE	DESCRIPTION	APPROVED
1	AUG 2015	PER ADDENDUM No 1	RRR

CLARK COUNTY NEVADA

HACIENDA AVE
PAVEMENT LAYOUT
STA 83+00 TO 117+31
CLARK COUNTY, NEVADA, DEPARTMENT OF PUBLIC WORKS

REGISTERED PROFESSIONAL ENGINEER — RICHARD R. ROBINSON — No 23264 — Exp: 12/31/15 — CIVIL — STATE OF NEVADA

8/27/15

DESIGNED BY:	R ROBINSON
DRAWN BY:	BOB M
CHECKED BY:	R ROBINSON
DATE:	Aug 27, 2015 – 9:24am

SCALE	
HORIZ:	1" = 40'
VERT:	NA
FIELD BOOK	60-21-54
WORK ORDER	D2015-005
PROJECT No.	NONE

SHEET No **6**

N15173A

L-2098

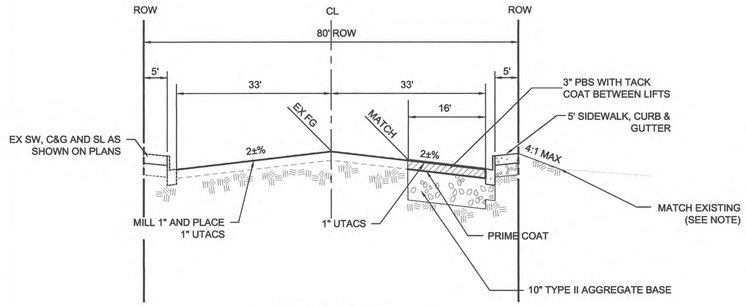

HACIENDA AVE
TYPICAL PAVEMENT SECTION
STA 43+60.00 TO STA 46+97.00
NTS

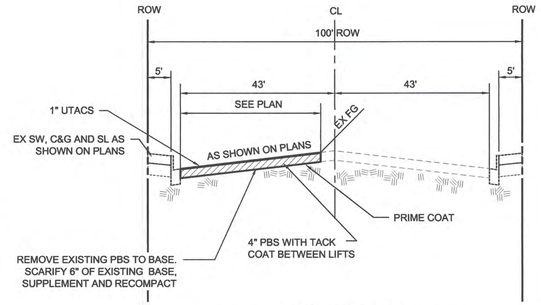

RAINBOW BLVD
TYPICAL PAVEMENT SECTION
STA 9+15± TO STA 10+65±
NTS

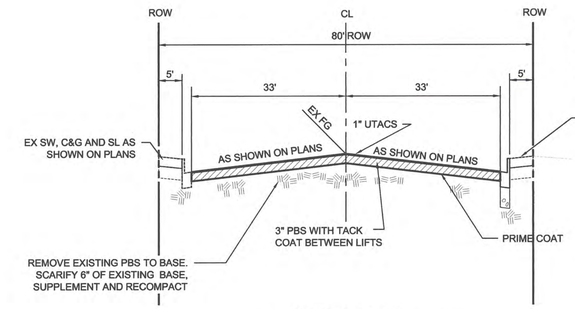

HACIENDA AVE
TYPICAL PAVEMENT SECTION
STA 112+75.00 TO STA 117+31.00
NTS

NOTES:

ADJUST PULL BOXES AND OTHER UTILITIES WITHIN NEW SIDEWALK AREA, AS REQUIRED.

IN AREAS WHERE THE TEMPORARY FENCING EXTENDS INTO THE SIDEWALK AREA, RESET FENCE POSTS BEHIND SIDEWALK AREA

APPROVED FOR CONSTRUCTION

Las Vegas Valley Water District Engineering Services Manager
Date _____ Project No 123857

ADJUST ALL VALVES WITHIN SCOPE OF WORK TO FINISHED GRADE PER UDACS PLATE No 39. VALVES SHOULD BE ACCESSIBLE AT ALL TIMES.

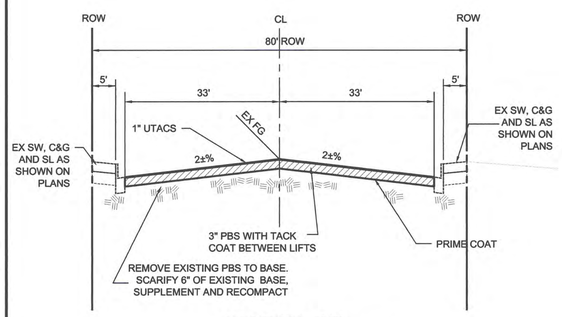

HACIENDA AVE
TYPICAL PAVEMENT SECTION
STA 90+55.55 TO STA 93+89.00
NTS

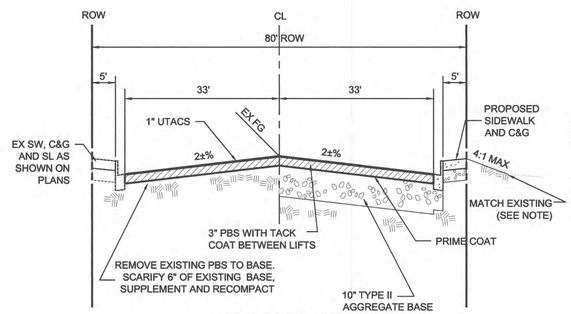

HACIENDA AVE
TYPICAL PAVEMENT SECTION
STA 78+00.00 TO STA 90+55.55
NTS

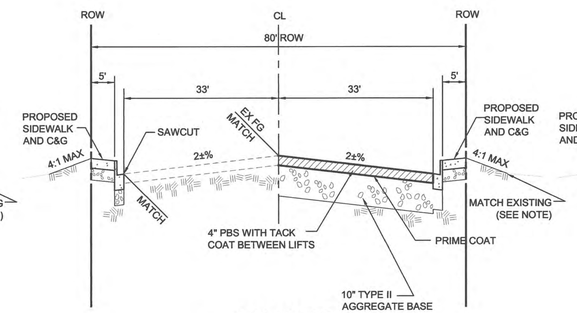

BUFFALO DR
TYPICAL PAVEMENT SECTION
STA 8+11.90 TO STA 9+35
NTS

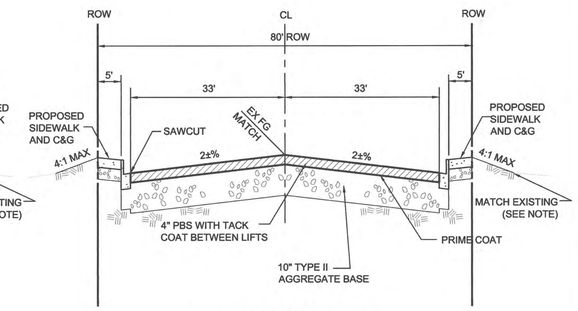

BUFFALO DR
TYPICAL PAVEMENT SECTION
STA 9+35 TO STA 9+60
NTS

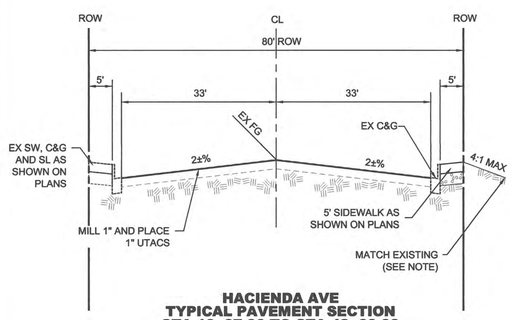

HACIENDA AVE
TYPICAL PAVEMENT SECTION
STA 10+87.00 TO STA 43+60.00
STA 46+97.00 TO STA 67+12.00
STA 100+59.00 TO STA 112+75.00
NTS

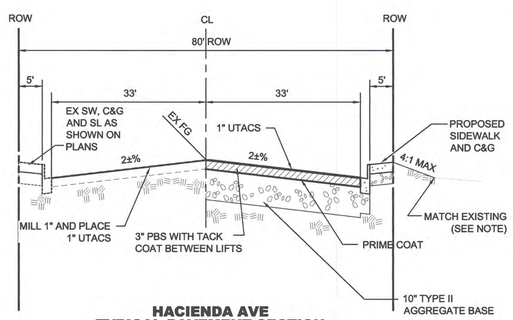

HACIENDA AVE
TYPICAL PAVEMENT SECTION
STA 67+12.00 TO STA 78+00.00
STA 93+84.00 TO STA 100+59.00
NTS

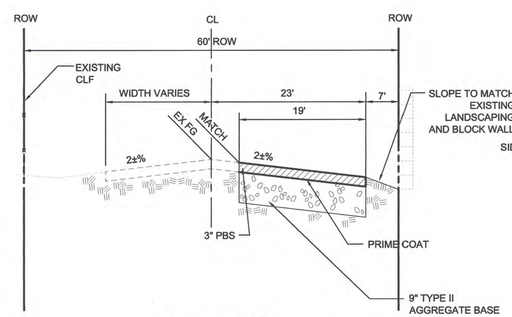

TENAYA WAY
TYPICAL PAVEMENT SECTION
STA 6+75 TO STA 8+75
NTS

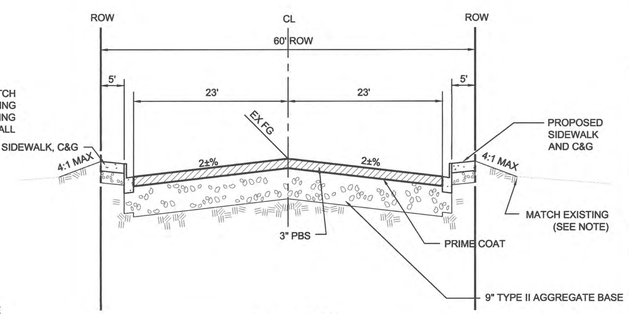

TIOGA WAY
TYPICAL PAVEMENT SECTION
STA 8+74 TO STA 9+60
NTS

L2098 HACIENDA AVE.DWG

REV No	DATE	DESCRIPTION	APPROVED
1	AUG 2015	PER ADDENDUM No 1	RRR

CLARK COUNTY NEVADA

HACIENDA AVE
DURANGO DR TO RAINBOW BLVD
TYPICAL SECTIONS
CLARK COUNTY, NEVADA, DEPARTMENT OF PUBLIC WORKS

REGISTERED PROFESSIONAL ENGINEER RICHARD R ROBINSON Exp. 12/31/15 CIVIL No 23264 STATE OF NEVADA
8/27/15

DESIGNED BY:	R ROBINSON
DRAWN BY:	BOB M
CHECKED BY:	R ROBINSON
DATE:	Aug 27, 2015 – 7:30am

SCALE	
HORIZ:	NA
VERT:	NA
FIELD BOOK	60-21-54
WORK ORDER	D2015-005
PROJECT No.	NONE

SHEET No **7**

N15173A

L-2098

HACIENDA AVE

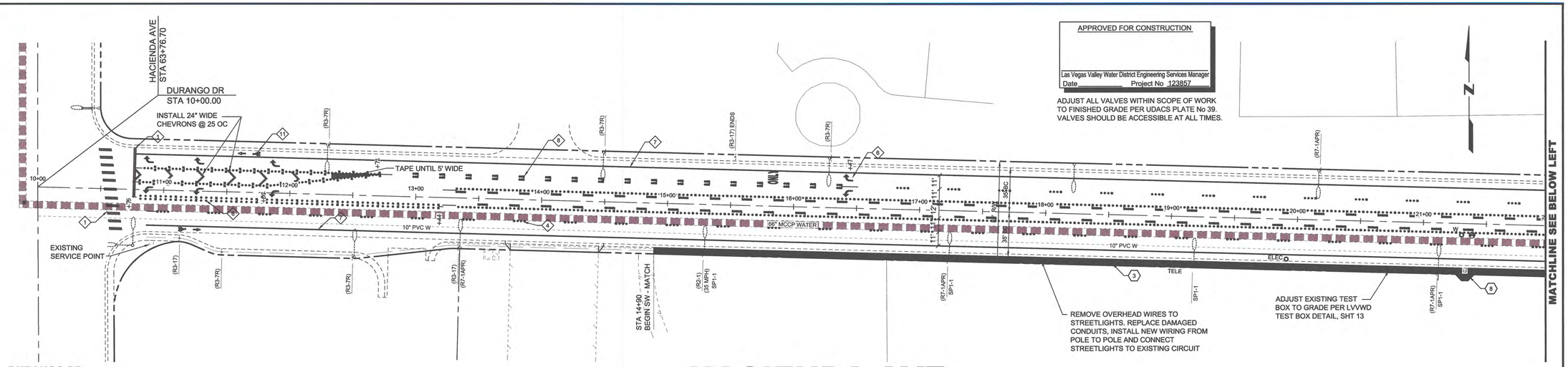

APPROVED FOR CONSTRUCTION

Las Vegas Valley Water District Engineering Services Manager

Date _____ Project No 123857

HACIENDA AVE

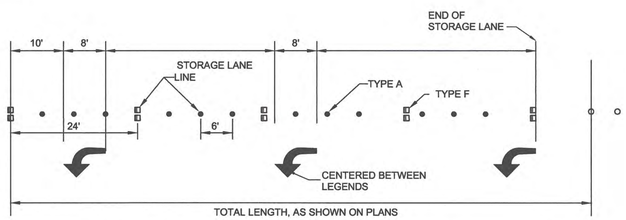

TYPICAL LEFT TURN LANE

CONSTRUCTION NOTES

- A REMOVE CONCRETE CURB
- B REMOVE AND SALVAGE SIGN
- 1 CONSTRUCT PAVEMENT SECTION PER DETAIL, SHT 7
- 2 CONSTRUCT "L" TYPE CURB AND GUTTER PER STD DWG 216
- 3 CONSTRUCT CONCRETE SIDEWALK PER STD DWG 234
- 4 CONSTRUCT CONCRETE CROSS GUTTER PER STD DWG 228
- 5 INSTALL DETECTABLE WARNING PANEL PER STD DWG 235
- 6 INSTALL CONCRETE SIDEWALK RAMP CASE I PER STD DWG 235
- 7 INSTALL CONCRETE SIDEWALK RAMP CASE II PER STD DWG 235
- 8 CONSTRUCT MEANDERING CONCRETE SIDEWALK PER DETAIL, SHT 8
- 9 ADJUST LVVWD ANODE PER DETAIL, SHT 13

TRAFFIC NOTES

- 1 INSTALL CROSSWALKS AND STOP LINES AS SHOWN PER STD DWG'S 246.6 AND 254
- 2 INSTALL TYPE 1 CENTERLINE PER STD DWG 244
- 3 INSTALL TYPE 2 CENTERLINE PER STD DWG 244
- 4 INSTALL TYPE 4 LANE LINE PER STD DWG 244.1
- 5 RELOCATE SIGN PANEL ON NEW GROUND MOUNTED POST
- 6 INSTALL STORAGE LANE LINE AND LEGENDS PER DETAIL SHT 8
- 7 INSTALL 6" TYPE 1 WHITE EDGE LINE
- 8 INSTALL DROP LANE PER STD DWG 246.6
- 9 INSTALL 250 HPS STREET LIGHT PER STD DWG 314
- 11 INSTALL BICYCLE LEGEND PER DETAIL, SHT 12
- 12 INSTALL GROUND MOUNTED SIGN AS SHOWN
- 13 INSTALL POLE MOUNTED SIGN AS SHOWN
- 14 INSTALL 6 - 6X6 MULTIPLE LOOP SYSTEM PER STD DWG 834
- 15 INSTALL 8" TYPE I WHITE EDGE LINE
- 16 INSTALL 1 1/4" CONDUIT FOR STREET LIGHTING WITH (2) #4 AND (1) #8 THW-2 OR XHHW-2 WIRE
- 17 INSTALL (3) #10 AWG THW-2-2 OR XHHW2

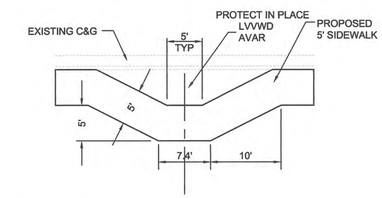

MEANDERING SIDEWALK

NTS

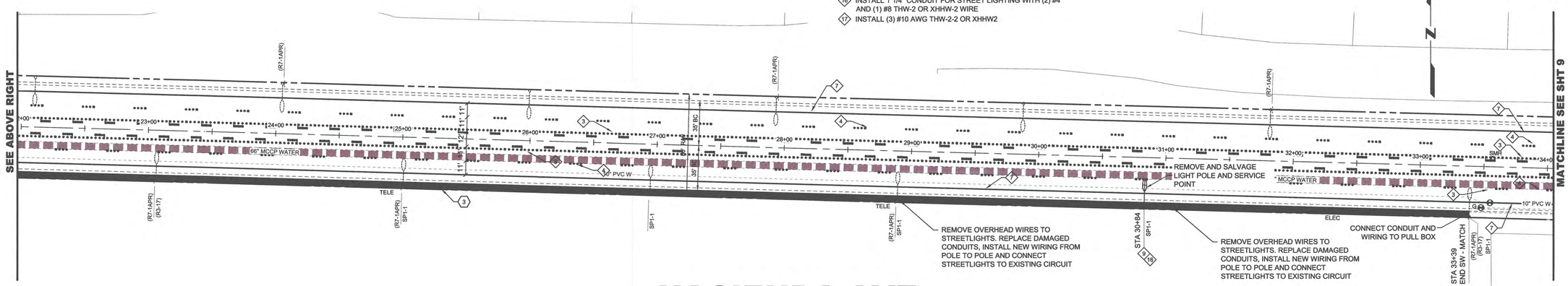

HACIENDA AVE

L2098 HACIENDA AVE.DWG

REV No	DATE	DESCRIPTION	APPROVED
1	AUG 2015	PER ADDENDUM No 1	RRR

CLARK COUNTY NEVADA

HACIENDA AVE

PAVEMENT WIDENING AND MARKING PLAN

STA 10+00 TO STA 34+00

CLARK COUNTY, NEVADA, DEPARTMENT OF PUBLIC WORKS

REGISTERED PROFESSIONAL ENGINEER RICHARD R. ROBINSON Exp: 12/31/15 CIVIL No 23264 STATE OF NEVADA 8/27/15

DESIGNED BY:	R ROBINSON
DRAWN BY:	BOB M
CHECKED BY:	R ROBINSON
DATE:	Aug 27, 2015 – 7:32 am

SCALE	
HORIZ:	1" = 40'
VERT:	NA
FIELD BOOK	60-21-54
WORK ORDER	D2015-005
PROJECT No.	NONE

SHEET No **8**

N15173A

L-2098

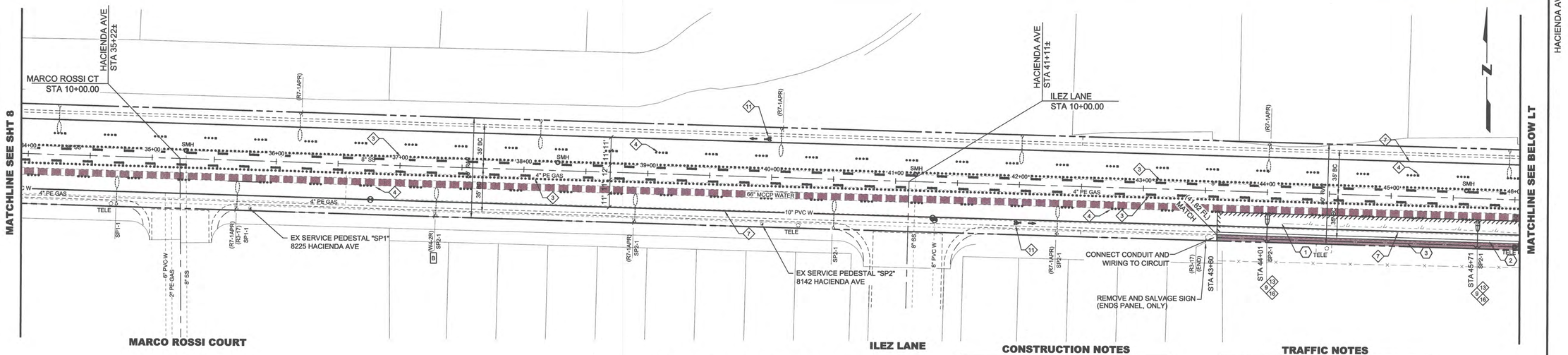

HACIENDA AVE

APPROVED FOR CONSTRUCTION

Las Vegas Valley Water District Engineering Services Manager

Date_____ Project No 123857

ADJUST ALL VALVES WITHIN SCOPE OF WORK TO FINISHED GRADE PER UDACS PLATE No 39. VALVES SHOULD BE ACCESSIBLE AT ALL TIMES.

CONSTRUCTION NOTES

- A REMOVE CONCRETE CURB
- B REMOVE AND SALVAGE SIGN
- 1 CONSTRUCT PAVEMENT SECTION PER DETAIL, SHT 7
- 2 CONSTRUCT "L" TYPE CURB AND GUTTER PER STD DWG 216
- 3 CONSTRUCT CONCRETE SIDEWALK PER STD DWG 234
- 4 CONSTRUCT CONCRETE CROSS GUTTER PER STD DWG 228
- 5 INSTALL DETECTABLE WARNING PANEL PER STD DWG 235
- 6 INSTALL CONCRETE SIDEWALK RAMP CASE I PER STD DWG 235
- 7 INSTALL CONCRETE SIDEWALK RAMP CASE II PER STD DWG 235
- 8 CONSTRUCT MEANDERING CONCRETE SIDEWALK PER DETAIL, SHT 8
- 9 ADJUST LVVWD ANODE PER DETAIL, SHT 13

TRAFFIC NOTES

- 1 INSTALL CROSSWALKS AND STOP LINES AS SHOWN PER STD DWG'S 246.6 AND 254
- 2 INSTALL TYPE 1 CENTERLINE PER STD DWG 244
- 3 INSTALL TYPE 2 CENTERLINE PER STD DWG 244
- 4 INSTALL TYPE 4 LANE LINE PER STD DWG 244.1
- 5 RELOCATE SIGN PANEL ON NEW GROUND MOUNTED POST
- 6 INSTALL STORAGE LANE LINE AND LEGENDS PER DETAIL SHT 8
- 7 INSTALL 6" TYPE 1 WHITE EDGE LINE
- 8 INSTALL DROP LANE PER STD DWG 246.6
- 9 INSTALL 250 HPS STREET LIGHT PER STD DWG 314
- 11 INSTALL BICYCLE LEGEND PER DETAIL, SHT 12
- 12 INSTALL GROUND MOUNTED SIGN AS SHOWN
- 13 INSTALL POLE MOUNTED SIGN AS SHOWN
- 14 INSTALL 6 - 6X6 MULTIPLE LOOP SYSTEM PER STD DWG 834
- 15 INSTALL 8" TYPE I WHITE EDGE LINE
- 16 INSTALL 1 1/4" CONDUIT FOR STREET LIGHTING WITH (2) #4 AND (1) #8 THW-2 OR XHHW-2 WIRE
- 17 INSTALL (3) #10 AWG THW-2-2 OR XHHW2

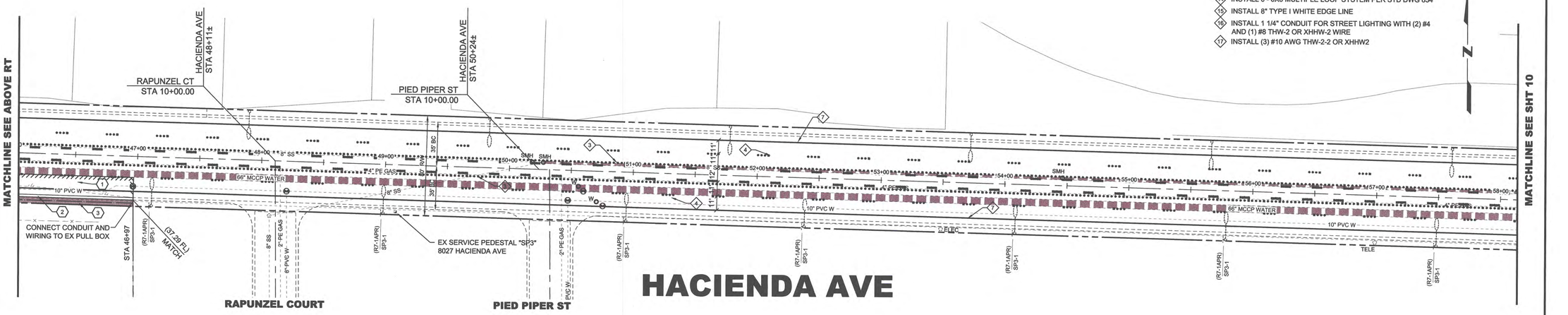

HACIENDA AVE

REV No	DATE	DESCRIPTION	APPROVED
1	AUG 2015	PER ADDENDUM No 1	RRR

CLARK COUNTY NEVADA

HACIENDA AVE

PAVEMENT WIDENING AND MARKING PLAN

STA 34+00 TO STA 58+00

CLARK COUNTY, NEVADA, DEPARTMENT OF PUBLIC WORKS

REGISTERED PROFESSIONAL ENGINEER RICHARD R ROBINSON Exp: 12/31/15 CIVIL No 23264 STATE OF NEVADA

8/27/15

DESIGNED BY:	R ROBINSON
DRAWN BY:	BOB M
CHECKED BY:	R ROBINSON
DATE:	Aug 27, 2015 – 7:33am

SCALE		SHEET No
HORIZ:	1" = 40'	9
VERT:	NA	
FIELD BOOK	60-21-54	N15173A
WORK ORDER	D2015-005	
PROJECT No.	NONE	L-2098

L2098 HACIENDA AVE.DWG

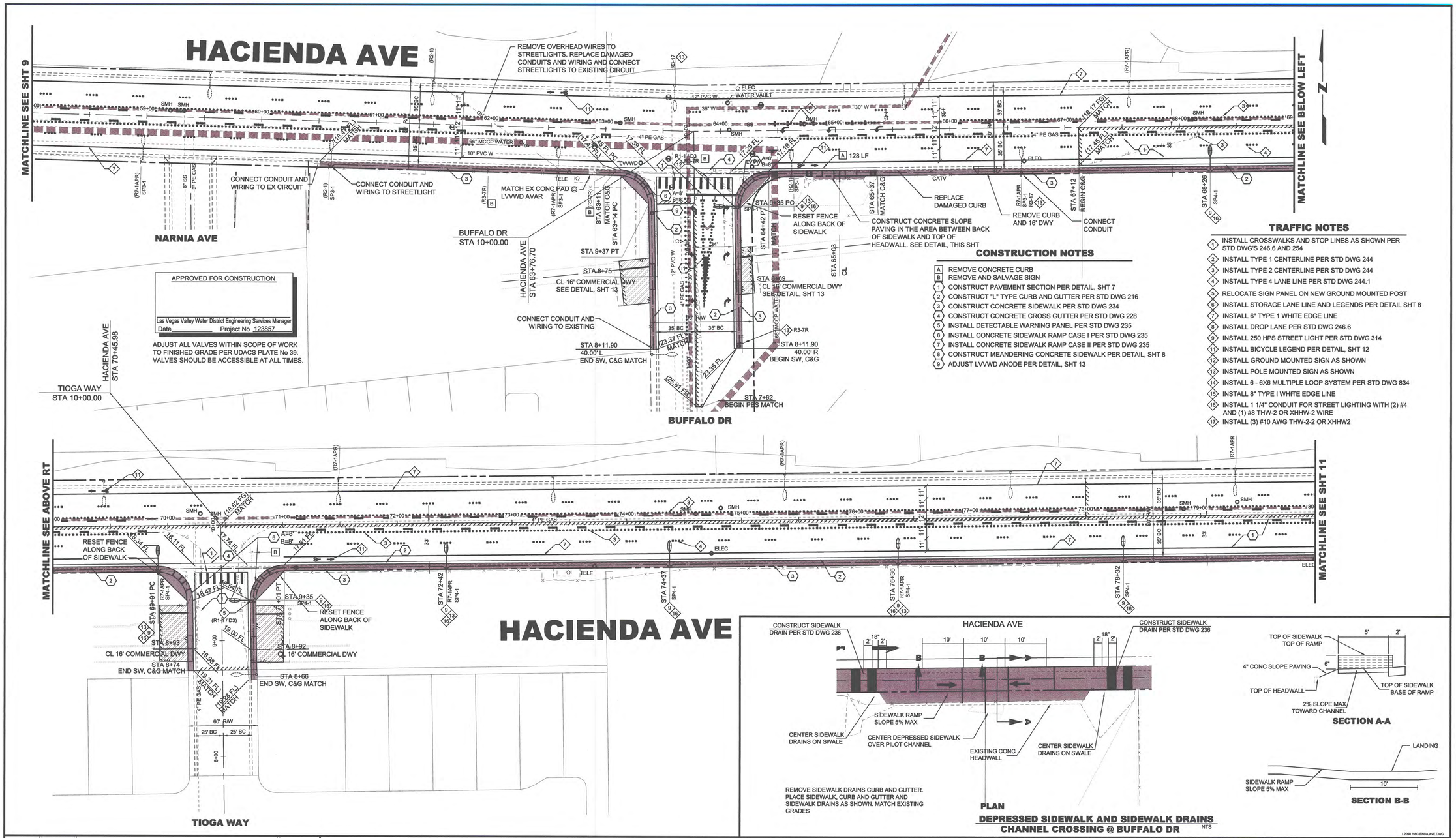

CONSTRUCTION NOTES

- A REMOVE CONCRETE CURB
- B REMOVE AND SALVAGE SIGN
- 1 CONSTRUCT PAVEMENT SECTION PER DETAIL, SHT 7
- 2 CONSTRUCT "L" TYPE CURB AND GUTTER PER STD DWG 216
- 3 CONSTRUCT CONCRETE SIDEWALK PER STD DWG 234
- 4 CONSTRUCT CONCRETE CROSS GUTTER PER STD DWG 228
- 5 INSTALL DETECTABLE WARNING PANEL PER STD DWG 235
- 6 INSTALL CONCRETE SIDEWALK RAMP CASE I PER STD DWG 235
- 7 INSTALL CONCRETE SIDEWALK RAMP CASE II PER STD DWG 235
- 8 CONSTRUCT MEANDERING CONCRETE SIDEWALK PER DETAIL, SHT 8
- 9 ADJUST LVVWD ANODE PER DETAIL, SHT 13

TRAFFIC NOTES

- 1 INSTALL CROSSWALKS AND STOP LINES AS SHOWN PER STD DWG'S 246.6 AND 254
- 2 INSTALL TYPE 1 CENTERLINE PER STD DWG 244
- 3 INSTALL TYPE 2 CENTERLINE PER STD DWG 244
- 4 INSTALL TYPE 4 LANE LINE PER STD DWG 244.1
- 5 RELOCATE SIGN PANEL ON NEW GROUND MOUNTED POST
- 6 INSTALL STORAGE LANE LINE AND LEGENDS PER DETAIL SHT 8
- 7 INSTALL 6" TYPE 1 WHITE EDGE LINE
- 8 INSTALL DROP LANE PER STD DWG 246.6
- 9 INSTALL 250 HPS STREET LIGHT PER STD DWG 314
- 11 INSTALL BICYCLE LEGEND PER DETAIL, SHT 12
- 12 INSTALL GROUND MOUNTED SIGN AS SHOWN
- 13 INSTALL POLE MOUNTED SIGN AS SHOWN
- 14 INSTALL 6 - 6X6 MULTIPLE LOOP SYSTEM PER STD DWG 834
- 15 INSTALL 8" TYPE I WHITE EDGE LINE
- 16 INSTALL 1 1/4" CONDUIT FOR STREET LIGHTING WITH (2) #4 AND (1) #8 THW-2 OR XHHW-2 WIRE
- 17 INSTALL (3) #10 AWG THW-2-2 OR XHHW2

REV No	DATE	DESCRIPTION	APPROVED
1	AUG 2015	PER ADDENDUM No 1	RRR

HACIENDA AVE

PAVEMENT WIDENING AND MARKING PLAN

STA 58+00 TO 80+00

CLARK COUNTY, NEVADA, DEPARTMENT OF PUBLIC WORKS

REGISTERED PROFESSIONAL ENGINEER RICHARD R. ROBINSON Exp: 12/31/15 CIVIL No 23264 STATE OF NEVADA
8/27/15

DESIGNED BY:	R ROBINSON
DRAWN BY:	BOB M
CHECKED BY:	R ROBINSON
DATE:	Aug 27, 2015 – 7:56am

SCALE	
HORIZ:	1" = 40'
VERT:	NA
FIELD BOOK	60-21-54
WORK ORDER	D2015-005
PROJECT No.	NONE

SHEET No **10**

N15173A

L-2098

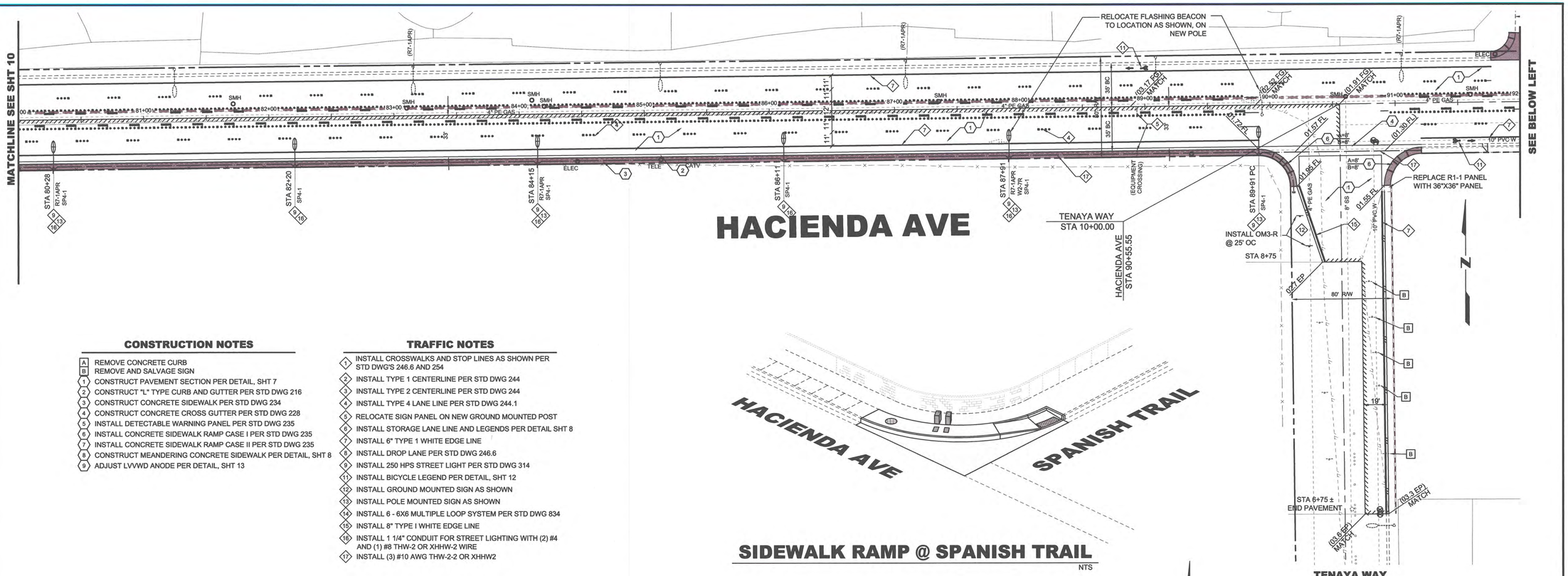

CONSTRUCTION NOTES

- A REMOVE CONCRETE CURB
- B REMOVE AND SALVAGE SIGN
- 1 CONSTRUCT PAVEMENT SECTION PER DETAIL, SHT 7
- 2 CONSTRUCT "L" TYPE CURB AND GUTTER PER STD DWG 216
- 3 CONSTRUCT CONCRETE SIDEWALK PER STD DWG 234
- 4 CONSTRUCT CONCRETE CROSS GUTTER PER STD DWG 228
- 5 INSTALL DETECTABLE WARNING PANEL PER STD DWG 235
- 6 INSTALL CONCRETE SIDEWALK RAMP CASE I PER STD DWG 235
- 7 INSTALL CONCRETE SIDEWALK RAMP CASE II PER STD DWG 235
- 8 CONSTRUCT MEANDERING CONCRETE SIDEWALK PER DETAIL, SHT 8
- 9 ADJUST LVVWD ANODE PER DETAIL, SHT 13

TRAFFIC NOTES

- 1 INSTALL CROSSWALKS AND STOP LINES AS SHOWN PER STD DWG'S 246.6 AND 254
- 2 INSTALL TYPE 1 CENTERLINE PER STD DWG 244
- 3 INSTALL TYPE 2 CENTERLINE PER STD DWG 244
- 4 INSTALL TYPE 4 LANE LINE PER STD DWG 244.1
- 5 RELOCATE SIGN PANEL ON NEW GROUND MOUNTED POST
- 6 INSTALL STORAGE LANE LINE AND LEGENDS PER DETAIL SHT 8
- 7 INSTALL 6" TYPE 1 WHITE EDGE LINE
- 8 INSTALL DROP LANE PER STD DWG 246.6
- 9 INSTALL 250 HPS STREET LIGHT PER STD DWG 314
- 11 INSTALL BICYCLE LEGEND PER DETAIL, SHT 12
- 12 INSTALL GROUND MOUNTED SIGN AS SHOWN
- 13 INSTALL POLE MOUNTED SIGN AS SHOWN
- 14 INSTALL 6 - 6X6 MULTIPLE LOOP SYSTEM PER STD DWG 834
- 15 INSTALL 8" TYPE I WHITE EDGE LINE
- 16 INSTALL 1 1/4" CONDUIT FOR STREET LIGHTING WITH (2) #4 AND (1) #8 THW-2 OR XHHW-2 WIRE
- 17 INSTALL (3) #10 AWG THW-2-2 OR XHHW2

SIDEWALK RAMP @ SPANISH TRAIL

NTS

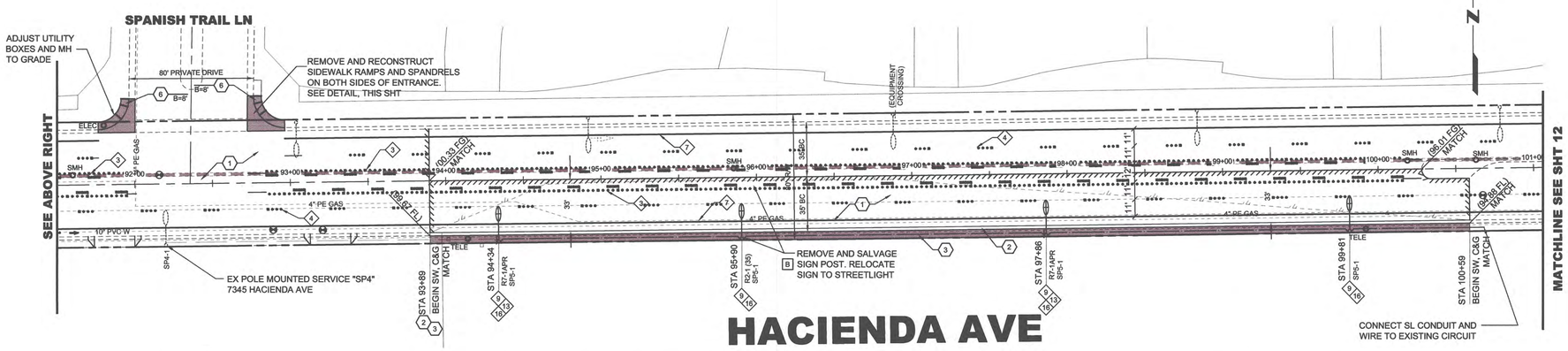

L2098 HACIENDA AVE.DWG

REV No	DATE	DESCRIPTION	APPROVED
1	AUG 2015	PER ADDENDUM No 1	RRR

CLARK COUNTY NEVADA

HACIENDA AVE

PAVEMENT WIDENING AND MARKING PLAN
STA 80+00 TO STA 101+00
CLARK COUNTY, NEVADA, DEPARTMENT OF PUBLIC WORKS

REGISTERED PROFESSIONAL ENGINEER — RICHARD R. ROBINSON — Exp: 12/31/15 — CIVIL — No 23264 — STATE OF NEVADA

8/27/15

DESIGNED BY:	R ROBINSON
DRAWN BY:	BOB M
CHECKED BY:	R ROBINSON
DATE:	Aug 27, 2015 – 7:57am

SCALE	
HORIZ:	1" = 40'
VERT:	NA
FIELD BOOK	60-21-54
WORK ORDER	D2015-005
PROJECT No.	NONE

SHEET No **11**

N15173A

L-2098

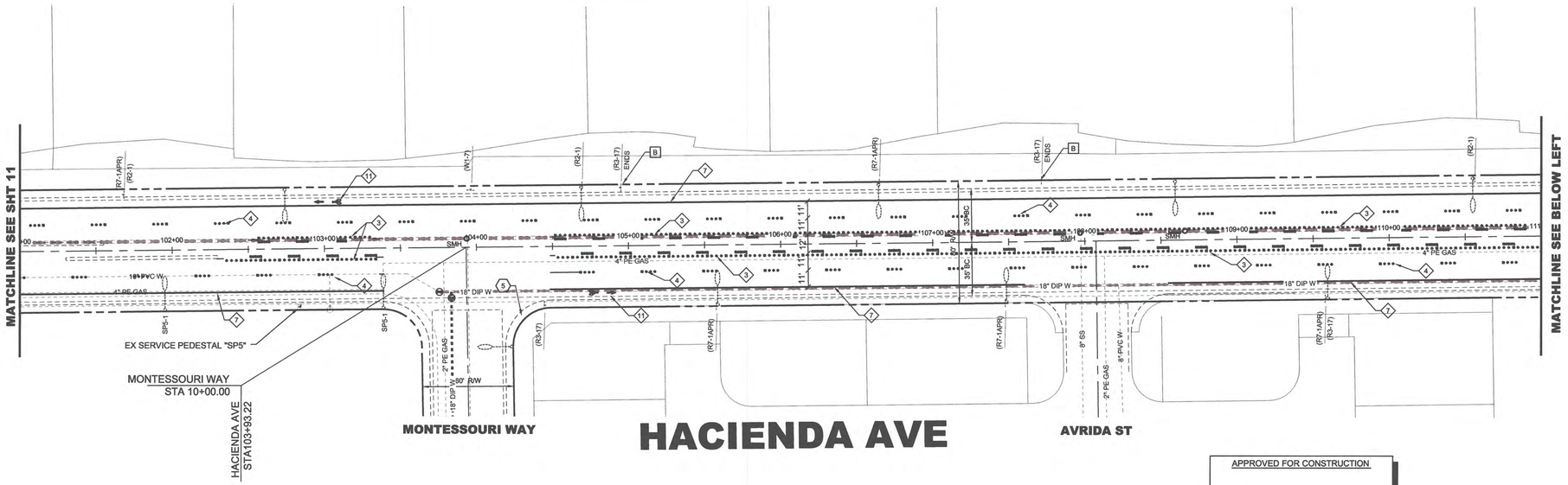

APPROVED FOR CONSTRUCTION

Las Vegas Valley Water District Engineering Services Manager

Date_____ Project No 123857

ADJUST ALL VALVES WITHIN SCOPE OF WORK TO FINISHED GRADE PER UDACS PLATE No 39. VALVES SHOULD BE ACCESSIBLE AT ALL TIMES.

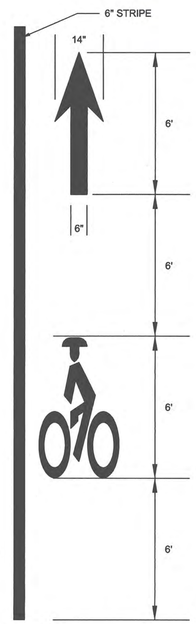

HELMETED BICYCLIST SYMBOL
TYPE II FILM

PAVEMENT MARKINGS FOR BICYCLE LANES

NTS

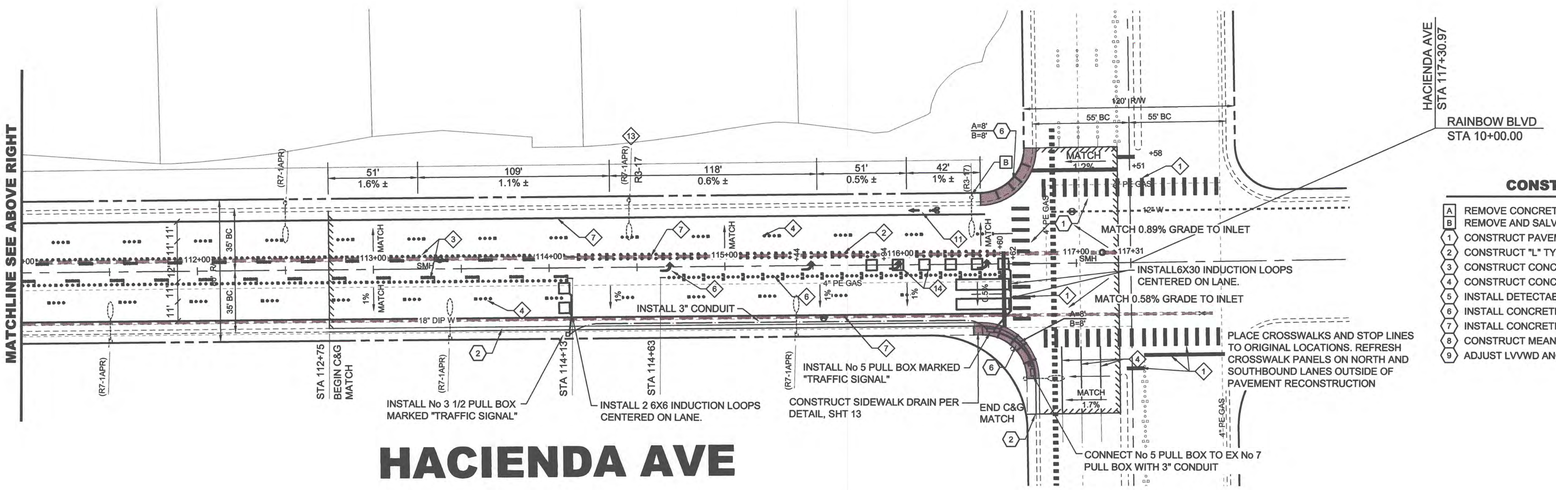

CONSTRUCTION NOTES

- A REMOVE CONCRETE CURB
- B REMOVE AND SALVAGE SIGN
- 1 CONSTRUCT PAVEMENT SECTION PER DETAIL, SHT 7
- 2 CONSTRUCT "L" TYPE CURB AND GUTTER PER STD DWG 216
- 3 CONSTRUCT CONCRETE SIDEWALK PER STD DWG 234
- 4 CONSTRUCT CONCRETE CROSS GUTTER PER STD DWG 228
- 5 INSTALL DETECTABLE WARNING PANEL PER STD DWG 235
- 6 INSTALL CONCRETE SIDEWALK RAMP CASE I PER STD DWG 235
- 7 INSTALL CONCRETE SIDEWALK RAMP CASE II PER STD DWG 235
- 8 CONSTRUCT MEANDERING CONCRETE SIDEWALK PER DETAIL, SHT 8
- 9 ADJUST LVVWD ANODE PER DETAIL, SHT 13

TRAFFIC NOTES

- 1 INSTALL CROSSWALKS AND STOP LINES AS SHOWN PER STD DWG'S 246.6 AND 254
- 2 INSTALL TYPE 1 CENTERLINE PER STD DWG 244
- 3 INSTALL TYPE 2 CENTERLINE PER STD DWG 244
- 4 INSTALL TYPE 4 LANE LINE PER STD DWG 244.1
- 5 RELOCATE SIGN PANEL ON NEW GROUND MOUNTED POST
- 6 INSTALL STORAGE LANE LINE AND LEGENDS PER DETAIL SHT 8
- 7 INSTALL 6" TYPE 1 WHITE EDGE LINE
- 8 INSTALL DROP LANE PER STD DWG 246.6
- 9 INSTALL 250 HPS STREET LIGHT PER STD DWG 314
- 11 INSTALL BICYCLE LEGEND PER DETAIL, SHT 12
- 12 INSTALL GROUND MOUNTED SIGN AS SHOWN
- 13 INSTALL POLE MOUNTED SIGN AS SHOWN
- 14 INSTALL 6 - 6X6 MULTIPLE LOOP SYSTEM PER STD DWG 834
- 15 INSTALL 8" TYPE I WHITE EDGE LINE
- 16 INSTALL 1 1/4" CONDUIT FOR STREET LIGHTING WITH (2) #4 AND (1) #8 THW-2 OR XHHW-2 WIRE
- 17 INSTALL (3) #10 AWG THW-2-2 OR XHHW2

L2098 HACIENDA AVE.DWG

REV No	DATE	DESCRIPTION	APPROVED
1	AUG 2015	PER ADDENDUM No 1	RRR

CLARK COUNTY NEVADA

HACIENDA AVE

PAVEMENT WIDENING AND MARKING PLAN
STA 101+00 TO STA 117+30.97
CLARK COUNTY, NEVADA, DEPARTMENT OF PUBLIC WORKS

REGISTERED PROFESSIONAL ENGINEER — RICHARD R. ROBINSON — Exp: 12/31/15 — CIVIL — No 23264 — STATE OF NEVADA

9/28/15

DESIGNED BY:	R ROBINSON
DRAWN BY:	BOB M
CHECKED BY:	R ROBINSON
DATE:	Aug 27, 2015 – 7:38am

SCALE		SHEET No
HORIZ:	1" = 40'	12
VERT:	NA	
FIELD BOOK	60-21-54	
WORK ORDER	D2015-005	N15173A
PROJECT No.	NONE	L-2098

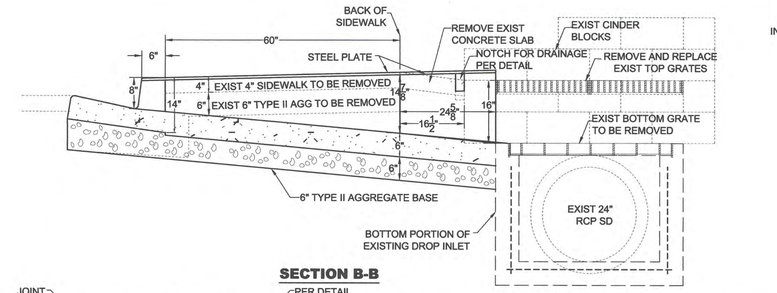

SECTION B-B

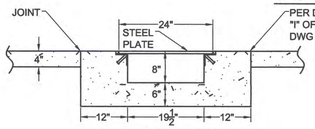

SECTION C-C

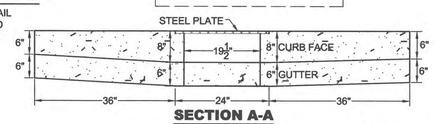

SECTION A-A

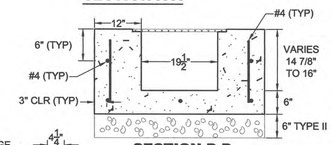

SECTION D-D

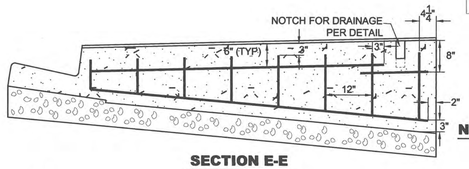

SECTION E-E

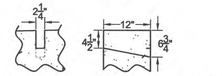

NOTCH FOR DRAINAGE DETAIL

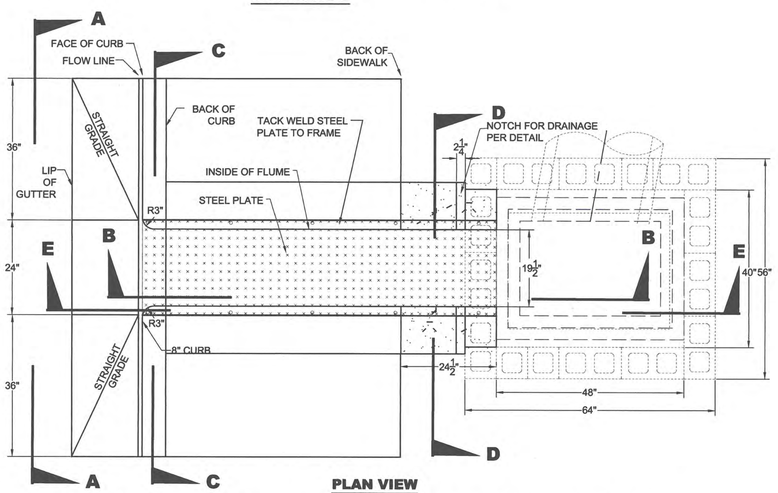

PLAN VIEW

SIDEWALK DRAIN CONNECTION DETAIL "H" 9+15.26, 44' RT CL

SCALE ~1" = 1.5'

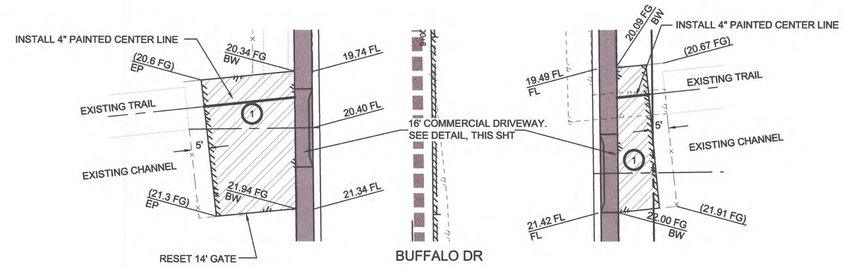

COMMERCIAL DRIVEWAY

NTS

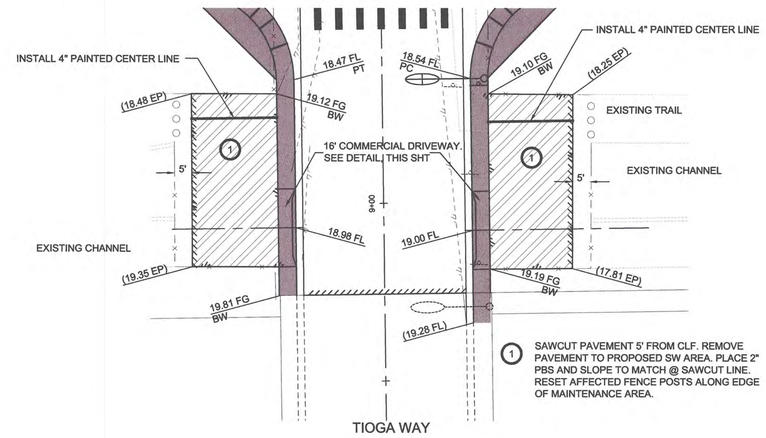

1 SAWCUT PAVEMENT 5' FROM CLF. REMOVE PAVEMENT TO PROPOSED SW AREA. PLACE 2" PBS AND SLOPE TO MATCH @ SAWCUT LINE. RESET AFFECTED FENCE POSTS ALONG EDGE OF MAINTENANCE AREA.

COMMERCIAL DRIVEWAY

NTS

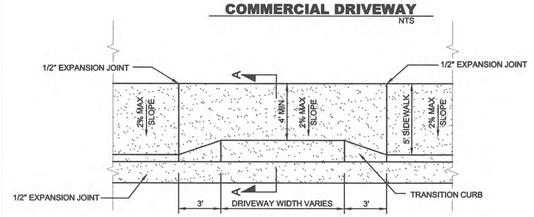

PLAN VIEW

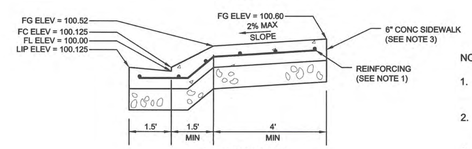

SECTION A-A

NOTE: ELEVATIONS SHOWN ARE TYPICAL

COMMERCIAL DRIVEWAY

NTS

NOTES:

1. No 4 BARS @ 16" OC BOTH WAYS EXTENDING INTO GUTTER. No 4 BARS SHALL BE PLACED 3" ABOVE BOTTOM OF CONCRETE, SUPPORTED BY NON-FERROUS CHAIRS APPROVED BY THE ENGINEER.
2. WHEN CONSTRUCTING DRIVEWAY WHERE CURB AND GUTTER EXISTS, COMPLETELY REMOVE INTERFERING PORTIONS OF EXISTING CURB AND GUTTER. DRIVEWAY SHALL BE MONOLITHIC TO AC LINE
3. DRIVEWAY THICKNESS FOR INDUSTRIAL USE SHALL BE 8" MIN
4. WEAKENED PLANE JOINTS SHALL BE EQUALLY SPACED AT 15' MAX, INTERVALS. SEE STD DWG 234

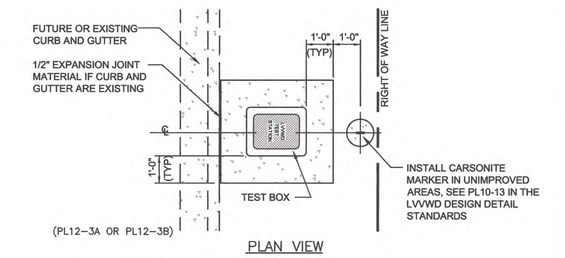

PLAN VIEW

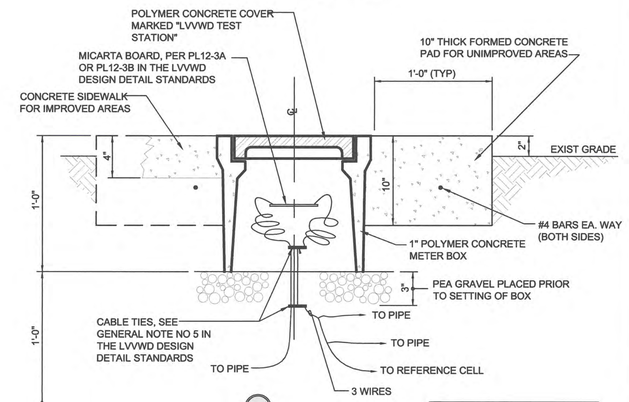

APPROVED FOR CONSTRUCTION

Las Vegas Valley Water District Engineering Services Manager

Date _____ Project No. 123857

TEST BOX DETAIL - TYPICAL

NOT TO SCALE PL12-2 090808

HACIENDA AVE

L2098 HACIENDA AVE.DWG

REV No	DATE	DESCRIPTION	APPROVED
1	AUG 2015	PER ADDENDUM No 1	RRR

CLARK COUNTY NEVADA

HACIENDA AVE

DURANGO DR TO RAINBOW BLVD

DETAILS

CLARK COUNTY, NEVADA, DEPARTMENT OF PUBLIC WORKS

REGISTERED PROFESSIONAL ENGINEER RICHARD R. ROBINSON Exp: 12/31/15 CIVIL No 23264 STATE OF NEVADA 8/27/15

DESIGNED BY:	R ROBINSON
DRAWN BY:	BOB M
CHECKED BY:	R ROBINSON
DATE:	Aug 27, 2015 – 7:39am

SCALE	
HORIZ:	NA
VERT:	NA
FIELD BOOK	60-21-54
WORK ORDER	D2015-005
PROJECT No.	NONE

SHEET No **13**

N15173A

L-2098