Department of Administrative Services
Purchasing and Contracts Division

CONFIRMATION FORM
for
RECEIPT OF BID NO. 603858-15

If you are interested in this invitation, immediately upon receipt please fax this confirmation form to the fax number provided at the bottom of this page.

Failure to do so means you are not interested in the project and do not want any associated addenda mailed to you.

SUPPLIER ACKNOWLEDGES RECEIVING THE FOLLOWING BID DOCUMENT:

PROJECT NO. BID NO. 603858-15 BID PAGES: 40

DESCRIPTION: VARIOUS CURRENT PRODUCTION MODEL UTILITY VEHICLES

SUPPLIER MUST COMPLETE THE FOLLOWING INFORMATION:

Company Name:_____

Company Address:_____

City / State / Zip:_____

Name / Title:_____

Area Code/Phone Number:_____

Area Code/Fax Number:_____

Email Address:_____

Please indicate the method you used to obtain this Bid Document:

_____ Internet _____Plan Room

FAX THIS CONFIRMATION FORM TO: (702) 386-4914
TYPE or PRINT CLEARLY

CLARK COUNTY, NEVADA

INVITATION TO BID

BID NO. 603858-15
VARIOUS CURRENT PRODUCTION MODEL UTILITY VEHICLES

The bid package is available as follows:

- Internet – Visit the Clark County Purchasing and Contracts Division website at http://www.ClarkCountyNV.gov/Purchasing. Click on "Current Opportunities" and locate Document No. 603858 in the list of current solicitations.
- Mail – Please fax a request to (702) 386-4914 specifying project number and description. Be sure to include company address, phone and fax numbers.
- Pick up - Clark County Government Center, 500 South Grand Central Parkway, Purchasing and Contracts Division, Fourth Floor, Las Vegas, NV 89106.

A Pre-bid Conference will be held on **OCTOBER 16, 2015** at **9:00 a.m.**, at the Clark County Government Center, 500 South Grand Central Parkway, Purchasing and Contracts Division, Fourth Floor, Las Vegas, Nevada 89106. If your firm is unfamiliar with the County Bid Submittal procedures and would like to obtain training on the submittal process for this Bid, please contact Sandra Mendoza, Purchasing Analyst II, at (702) 455-4184 no later than **THURSDAY, OCTOBER 15, 2015,** and a training session will be provided immediately following the pre-bid conference referenced above.

Bids will be accepted at the Clark County Government Center address specified above, on or before **OCTOBER 23, 2015** at **3:00:00 p.m.** based on the time clock at the Clark County Purchasing and Contracts front desk.

PLEASE PUBLISH THE INFORMATION PROVIDED ABOVE THE LINE.

PUBLISHED:
Las Vegas Review-Journal
October 2, 2015

TABLE OF CONTENTS

TABLE OF CONTENTS i

INSTRUCTIONS TO BIDDERS I-1

GENERAL CONDITIONS II-1

SPECIAL CONDITIONS III-1
QUALIFICATION CLAUSES III-1
DELIVERY CLAUSES III-1

TECHNICAL SPECIFICATIONS IV-1

BID FORM V-1

SUBCONTRACTOR INFORMATION ..... ATTACHMENT 1

DEVIATIONS FROM SPECIFICATIONS ..... EXHIBIT A

DISCLOSURE OF OWNERSHIP/PRINCIPALS ..... ATTACHED

I – INSTRUCTIONS TO BIDDERS

BID NO. 603858-15
VARIOUS CURRENT PRODUCTION MODEL UTILITY VEHICLES

1. INTENT OF INVITATION

In accordance with the terms and conditions provided in this bid document, it is the intent of this formal Invitation to Bid to receive bids from qualified Bidders for the items specified in this document.

2. DEFINITIONS

A. **Addendum:** A written document issued by COUNTY, via the Purchasing and Contracts Division, prior to the submission of bids which modifies or clarifies the Bidding Documents by additions, deletions, clarifications, or corrections.

B. **BCC:** The Clark County Board of County Commissioners.

C. **Bid (Bidder):** An offer, in response to a solicitation by COUNTY, to supply goods or services at a specific price and within a specified time period.

D. **Bid (COUNTY):** A competitive solicitation by COUNTY to procure goods or services in accordance with Nevada Revised Statutes (NRS) 332.

E. **Bid Form:** Standard printed form given to Bidders that must be completed and submitted back to COUNTY with the required information for evaluation of the bid, in correct format and sequence. Bid pages are identified herein as "Bid Form" and contain a black line in the right margin.

F. **Bid Submittal:** Bid Form pages, Bid Security (if required), and all required attachments.

G. **Bidder(s):** A supplier who submits a bid to COUNTY.

H. **Bidding Documents:** May include but are not limited to, the Invitation to Bid, Instructions to Bidders, General Conditions, Special Conditions, Technical Specifications, Contract Requirements and Forms, Bid Forms/Attachments, Exhibits, Specifications/Special Provisions and Drawings, and any Addenda issued prior to the date designated for receipt of bids, as applicable.

I. **CONTRACT:** Contract documents include the Bidding Documents, SUCCESSFUL BIDDER'S Bid Form, all Addenda, SUCCESSFUL BIDDER'S bonds and insurance and Notice of Award letter.

J. **COUNTY:** The term used throughout these documents to mean County of Clark, Nevada.

K. **F.O.B. Destination:** Designates the seller will pay shipping cost and remain responsible for the goods until the buyer takes possession.

L. **Governing Body:** Used throughout these documents to mean the Clark County Board of Commissioners.

M. **Lot:** A group of items similar in nature and bought individually, all items in a lot must be bid on to be a responsible bidder considered for award.

N. **Nevada Revised Statutes (NRS):** The current codified laws of the State of Nevada. Nevada law consists of the Constitution of Nevada (the state constitution) and Nevada Revised Statutes. The Nevada Supreme Court interprets the law and constitution of Nevada.

O. **No Substitute:** Means there is only one brand name product that is acceptable to perform the function required by the using department.

P. **Purchasing Manager:** The Clark County Purchasing Manager or their designee responsible for the Purchasing and Contracts Division.

Q. **Purchase Order:** The formal authorization by COUNTY for seller to provide goods or services to COUNTY. The formal CONTRACT takes precedence over any conflicting terms and conditions contained in the purchase order.

R. **SUCCESSFUL BIDDER:** Bidder who is the lowest responsive, responsible or best Bidder, to whom the Governing Body or the authorized representative has authorized the award of the CONTRACT.

3. DESIGNATED CONTACTS

For questions pertaining to this Invitation to Bid, please call Sandra Mendoza, Purchasing Analyst II, telephone number (702) 455-4184 or the Purchasing and Contracts Front Desk at (702) 455-2897. After award, the designated contact will be David Johnson, Manager, Automotive Services, telephone number (702) 455-8556.

4. CONTACT WITH COUNTY DURING BIDDING PROCESS

Communication between a Bidder and a member of the BCC, or between a Bidder and a non-designated COUNTY contact, regarding this bid is prohibited from the time the bid is advertised until the bid is recommended for award of a contract. Questions pertaining to this Invitation to Bid shall be addressed to the designated contact(s) specified above. Failure of a Bidder, or any of its representatives, to comply with this paragraph may result in its bid being rejected.

5. PREBID CONFERENCE

A pre-bid conference is being held for this bid. The intent of the pre-bid conference is to review the entire bid document and answer any questions Bidders may have.

6. ADDENDA AND INTERPRETATIONS

A. If it becomes necessary to revise any part of this bid, a written Addendum will be issued by COUNTY. COUNTY shall not be bound by any oral representations, clarifications, or changes made in the written requirements or specifications by COUNTYS' employees, unless such clarification or change is provided by COUNTY in written addendum form from the Purchasing and Contracts Division.

B. Bidder(s) shall take no advantage of any apparent error or omission in the Bidding Documents. In the event Bidder(s) discover such an error or omission, they shall immediately notify COUNTY. COUNTY will then make such corrections and interpretations as may be deemed necessary for fulfilling the intent of the Bidding Documents through the issuance of an Addendum.

C. Addenda shall be available via mail, certified mail, fax, online or pick up by all prospective Bidders.

D. Prior to submission of the bid, Bidder shall ascertain that it has received all Addenda issued. Bidder shall acknowledge receipt of each Addendum by completing the acknowledgement space provided on the Bid Form. Failure to acknowledge receipt of all addenda and use the correct bid form as required may result in rejection of bid.

7. DOCUMENT REVIEW

Bidders may visit the Purchasing and Contracts Division, during normal business hours, to review any current bid documents. This information is available for review provided the contents of the document have not been deemed confidential or proprietary as defined in the "Public Records" clause in the General Conditions section of this bid. Bids submitted in response to this invitation to bid may be reviewed after the formal bid opening has been completed. To review bid documents, an appointment must be made in advance to ensure that full consideration will be provided. Please call telephone number (702) 455-2897 and request the Purchasing Front Desk to schedule your appointment.

8. PREPARATION OF FORMS

All bids must be submitted on the Bid Form provided in this document. **All figures must be written in ink or typed.** Figures written in pencil or containing erasures are not acceptable and may be rejected. However, mistakes may be crossed out and corrections may be inserted adjacent thereto and initialed in ink by the person signing the bid form.

In the event there are unit price bid items provided in the Bid Form, and the total indicated for a unit price bid item does not equal the product of the unit price and quantity, the unit price shall govern and the total will be corrected accordingly. Mathematical errors in the Bid shall be corrected by COUNTY. If there is no cost for a unit price, the Bidder **MUST** enter "0" or write the words "NO COST."

9. BID DOCUMENTS NECESSARY FOR SUBMITTAL

Bid Form, all required attachments, and the bid security (if required) shall be included in the envelope containing the bid. These documents, together, comprise a bid. Omission of, or failure to complete, any portion of the required documents at the time of bid opening may be cause to reject the entire bid.

10. SUBCONTRACTOR INFORMATION

Bidders should submit with their bids a list of the Minority-Owned Business Enterprise (MBE), Women-Owned Business Enterprise (WBE), Physically-Challenged Business Enterprise (PBE), Small Business Enterprise (SBE) Veteran Business Enterprise (VET), Disabled Veteran Business Enterprise (DVET), and Emerging Small Business Enterprise (ESB) subcontractors for CONTRACT utilizing **Attachment 1.** The information provided in **Attachment 1** by Bidder is for COUNTY'S information only.

If there are any questions regarding **Attachment 1,** please contact Adleen Stidhum at telephone number (702) 455-7155.

11. DESCRIPTIVE LITERATURE

Bidder may be requested to provide the latest printed specifications and advertising literature on the product(s) offered on its Bid Form.

12. PRODUCTS

New Product:

SUCCESSFUL BIDDER shall guarantee that the product provided to COUNTY shall be new, and of the latest and most improved model of current production, and shall be of first quality as to workmanship and materials used in said units.

A new product is defined as a product that is made up completely of unused, genuine, original parts. The product shall not have been operated for any purpose other than routine operational testing. A demonstrator product does not meet this definition and is not acceptable.

13. BRAND NAMES "OR EQUAL"

Whenever, in this Invitation to Bid, any particular materials, process, or equipment are indicated or specified by patent, proprietary or brand name, or by name of manufacturer, such wording will be deemed to be used for the purpose of facilitating description of the material, process, or equipment desired and will be deemed to be followed by the words, "or equal." Proof satisfactory to COUNTY must be provided by SUCCESSFUL BIDDER to show that the alternative product is, in fact, equal to the product required in the specifications.

14. SUBSTITUTIONS

Specifications are intended to show kind and quality required, and are not intended to be restrictive. **Additional bids that are equal to, or exceed the requirements stated in this document are invited.** Bidders desiring to submit more than one bid for items other than those specified shall observe the following procedure:

A. Submit with the bid complete manufacturer's brochures of the actual items being offered, including pictures or dimensional drawings.

B. Proof, satisfactory to COUNTY, must be provided by Bidder to show that the product is equal to, or exceeds the bid specifications in design and performance.

C. Equivalent items may be subject to performance testing.

15. ORDER QUANTITIES AND UNIT PRICING

Unit pricing for the items listed in this bid shall be reflective of the unit of measure of “each.” This bid expressly prohibits “minimum order quantity” practices. All invoices shall reflect the pricing for the exact quantities received.

16. DISCOUNT TERMS OF PAYMENT

Terms of payment, as listed on the Bid Form, shall be defined as the amount of discount offered by Bidder to COUNTY if payment is made within a specified time frame.

Examples:

Terms of Payment: 2%, Net thirty (30) Calendar Days.

A 2% payment discount will be deducted from the purchase price if the invoice is paid within thirty (30) calendar days of receipt of invoice or delivery of an acceptable product or service, whichever is later.

Terms of Payment: 0%, Net thirty (30) Calendar Days.

No payment discount is offered and payment is due within thirty (30) calendar days of receipt of invoice or delivery of an acceptable product or service, whichever is later.

No prompt payment discount will be considered by COUNTY in the bid evaluation process unless the discount period offered by Bidder is thirty (30) calendar days or more.

17. ADDITIONAL BIDS

Bidders may submit more than one bid as long as all such bids comply with, or exceed, the bid terms, conditions and specifications.

18. DEVIATIONS TO TERMS AND CONDITIONS OR SPECIFICATIONS

Any additional agreements, terms, conditions, or exceptions to the bid requirements or specifications that are submitted with Bidder’s Bid Form may be considered substantial deviations from the bid requirements and be cause for rejection.

19. DURATION OF OFFER

All offers (bids) submitted in association with this Invitation to Bid shall be considered firm offers for a period of ninety (90) calendar days after the date of bid opening in order to allow COUNTY to evaluate and consider award, unless the offer is further extended in writing and agreed upon by both parties.

20. DEVIATIONS TO TECHNICAL SPECIFICATIONS

Any deviation taken at the time of or after bid submittal may render the bid non-responsive. If a Bidder is unable to meet the Technical Specifications, Bidder MUST complete the attached **Exhibit A** and submit it to the Purchasing Analyst at least five (5) business days prior to the scheduled **PRE-BID CONFERENCE**. It shall be the sole responsibility of the Bidder to ensure that the Purchasing Analyst has been properly notified, **PRIOR TO THE PRE-BID CONFERENCE** of the Bidder's deviation to the Technical Specifications.

21. BIDDER'S REPRESENTATION

Each Bidder by submitting their Bid represents that:

A. Bidder has read and understands the Bidding Documents and asserts that its bid is made in accordance therewith and shall be considered a firm offer for a period of ninety (90) calendar days following the opening of bids. The Bidder's offer may expire at the end of the ninety (90) calendar day period.

B. Bidder is familiar with the local conditions under which the work is to be performed.

C. **Prior to submission of the bid, Bidder shall ascertain that it has received all Addenda issued; Bidder shall acknowledge receipt of each Addendum by completing the acknowledgment space provided on the Bid Form. Failure to acknowledge receipt of all addenda and use the correct bid form as required may result in rejection of bid.**

22. SUBMISSION OF BIDS

All bids must be submitted in a sealed envelope plainly marked with the name and address of Bidder and the bid number and title. Bidders are requested to submit one (1) original and one (1) copy of the Bid Form and one (1) copy of all requested attachments unless otherwise specified. No responsibility will attach to COUNTY, or any official or employee thereof, for the pre-opening of, post opening of, or the failure to open a bid not properly addressed and identified. Bids are time-stamped upon receipt. Bids time-stamped after 3:00:00 p.m. based on the time clock at the Clark County Purchasing and Contracts front desk will be recorded as late, remain unopened and be formally rejected. **FAXED OR ELECTRONICALLY SUBMITTED BIDS ARE NOT ALLOWED AND WILL NOT BE CONSIDERED.**

The following are detailed delivery/mailing instructions for bids:

HAND DELIVERY	U.S. MAIL DELIVERY	EXPRESS DELIVERY
Clark County Government Center	Clark County Government Center	Clark County Government Center
Purchasing and Contracts Division, 4th Floor	Attn: Purchasing and Contracts, 4th Floor	Attn: Purchasing and Contracts, 4th Floor
500 South Grand Central Parkway	500 South Grand Central Parkway	500 South Grand Central Parkway
Las Vegas, Nevada 89106	P.O. Box 551217	Las Vegas, Nevada 89106
	Las Vegas, Nevada 89155-1217	

Regardless of the method used for delivery, Bidder shall be wholly responsible for the timely delivery of its bid. Overnight Mail must use the EXPRESS DELIVERY instructions.

Any bids submitted via a third party courier must be sealed in a separate envelope from courier's packaging to allow for proper recording of receipt.

Bidders and other interested parties are invited to attend the bid opening.

23. COST TO PREPARE AND SUBMIT RESPONSE

All costs incurred in the preparation and submission of responses to this Invitation to Bid shall be the responsibility of the Bidder.

24. WITHDRAWAL OF BID

A. Before Bid Opening

Bidders may request withdrawal of a posted, sealed bid prior to the scheduled bid opening time, provided the request for withdrawal is submitted to the Purchasing Analyst in writing, or a bid release form has been properly completed and submitted to the Purchasing and Contracts Division reception desk. Withdrawn bids must be re-submitted and time-stamped in accordance with this bid document in order to be accepted.

B. After the Bid Opening

All responsive and responsible bids received are considered firm offers for a period of ninety (90) calendar days. Bidder's offer will expire after ninety (90) calendar days unless the offer is further extended in writing by Bidder and agreed upon by both parties. If Bidder intended for award requests that its bid be withdrawn, that Bidder may be deemed non-responsible if responding to future invitations to bid or may be required to forfeit its bid bond (if applicable).

25. LOWEST RESPONSIVE AND RESPONSIBLE BIDDER

All bids will be awarded to the lowest responsive and responsible Bidder. The determination of the lowest responsive and responsible Bidder may be judged on all or some of the following factors: price, conformity to specifications, facilities and equipment, availability of repair parts, experience, terms of payment, qualifications, past performance, performance or delivery dates, quality and utility of services, supplies, materials or equipment offered and the adaptability of those services, supplies, materials or equipment to the required purpose of CONTRACT, and other objective and accountable factors which are reasonable. COUNTY has the option to accept additional promotional specials, discounts or trade-in allowances offered by SUCCESSFUL BIDDER during the term of CONTRACT but these offers will not be part of the determination for award of this bid unless otherwise specified.

In accordance with NRS 332.065.3, COUNTY may re-award CONTRACT if SUCCESSFUL BIDDER is found to be in breach of contract. Re-awarding the CONTRACT by COUNTY is not a waiver of any liability of the initial Bidder awarded CONTRACT.

26. REJECTION OF BID

COUNTY reserves the right to reject any and all bids received by reason of this request. COUNTY reserves the right to waive any minor informality or irregularity.

27. DISQUALIFICATION OF BIDDERS

Bidders may be disqualified and their bids may be rejected for any of, but not limited to, the following causes:

A. Failure to use the specified Bid Form furnished by COUNTY.

B. Lack of signature by an authorized representative.

C. Failure to properly complete the Bid Form.

D. Evidence of collusion among Bidders.

E. Unauthorized alteration to content of the Bid Form.

F. Failure to acknowledge all addenda issued.

28. TIE-BIDS

A tie-bid is defined as an instance where bids are received from two (2) or more Bidders who are the low Bidders, and their offers are identical. Bids must be identical in all evaluation areas; e.g., price, quality, delivery, terms, and ability to supply, etc. If any of these areas are not identical, it is not considered a tie-bid, and COUNTY can justify awarding to Bidder with the lowest responsive and responsible bid.

The procedure for tie-bids is to hold a public drawing and award the bid to the winner of the draw in accordance with the Method of Award clause in the Instruction to Bidders. When a drawing is necessary, Bidder(s) involved will be contacted with the time and place of the drawing. Attendance is not mandatory for the drawing. An impartial witness will be present at the drawing.

29. NOTIFICATION OF INTENT TO AWARD

COUNTY will issue to all Bidders a formal letter of “Notification of Intent to Award.” This notice will confirm COUNTY’S determination of the lowest responsive and responsible Bidder.

30. PROTESTS

A. Any Bidder who submits a bid and is allegedly aggrieved in connection with this solicitation or award of CONTRACT may protest. The letter of protest must, at a minimum, contain a written statement setting forth with specificity the reasons the person filing the notice believes that the applicable provisions of the law were violated and be accompanied by required bond. The protest must be submitted in writing to the Purchasing Analyst, within five (5) business days after COUNTY issued a “Notification of Intent to Award” letter. If a written protest is received within the time frame specified and is not resolved by mutual agreement, the Purchasing Analyst will issue a decision in writing to the protestor. Within three (3) business days of receipt of the decision, a protestor MUST submit to the Purchasing Manager its written notice of intent to appeal the decision to the BCC. The Purchasing Manager or their designee will notify the protestor of the date they may appear to present their appeal to the BCC. Protestor MUST submit to the Purchasing Manager fifteen (15) copies of any documents protestor intends to present to the BCC and all documents MUST be submitted ten (10) calendar days prior to the BCC meeting. The decision of the BCC will be final. The BCC is not required to consider protests unless this procedure is followed.

B. Bidder filing the protest shall be required, to post a bond with a good and solvent surety authorized to do business in this state, or submit other security, defined as a cashiers check, money order or certified check, to COUNTY who shall hold the bond or other security until a determination is made on the protest. A bond posted or other security submitted with the protest must be in an amount equal to the lesser of:

(1) 25% of the total value of the bid submitted by Bidder filing the notice of protest; or
(2) $250,000

C. The notice of protest filed in accordance with the provisions of this section operates as a stay of action in relation to the awarding of CONTRACT until the BCC makes a determination on the protest.

D. A Bidder who submits an unsuccessful bid may not seek any type of judicial intervention until the BCC has made a determination on the protest and awards CONTRACT.

E. Neither the BCC nor its authorized representative is liable for any costs, expenses, attorney's fees, loss of income or other damages sustained by a Bidder who submits a bid, whether or not the person files the protest pursuant to this section.

F. If the protest is upheld by the BCC, the bond posted or other security submitted with the notice of protest must be returned to Bidder who posted the bond or submitted the security. If the protest is rejected by the BCC, COUNTY may make a claim against the bond or other security in an equal amount to the expenses incurred by COUNTY because of the unsuccessful protest. Any money remaining after the claim has been satisfied must be returned to the person who posted the bond or submitted the security.

31. METHOD OF AWARD

Award will be made to the lowest responsive and responsible Bidder on an item by item basis, contingent upon the submission of all requested documents within the timelines specified, unless an extension is approved by COUNTY.

32. LETTER OF AWARD

Award of this bid will be by "Letter of Award" issued by the Purchasing and Contracts Division. CONTRACT shall include this Bid Document, any associated Addendums, and the Bid Form as signed by SUCCESSFUL BIDDER.

33. INITIAL TERM

The initial term of CONTRACT shall be from date of award through June 30, 2016.

34. CONTRACT RENEWAL

COUNTY reserves the option to renew CONTRACT for an additional two (2), one-year period(s) from its expiration date. It is understood that SUCCESSFUL BIDDER shall consider this bid an open-end CONTRACT for the vehicle offered. In the event COUNTY requires additional vehicles or replacement vehicles, it is understood that SUCCESSFUL BIDDER agrees to furnish vehicles or replacement vehicles as per the terms of this bid from the date of award through subsequent model year(s) 2016 and 2017.

35. CONTRACT EXTENSION

COUNTY reserves the option to temporarily extend CONTRACT for up to ninety (90)calendar days from its expiration date for any reason. The current contract pricing shall remain in effect through the contract extension period.

36. ADDITIONAL REQUIREMENTS

Although particular COUNTY departments may be identified in the solicitation, unless otherwise documented in CONTRACT, other COUNTY departments may utilize the resulting CONTRACT upon approval by COUNTY Purchasing and Contracts Division. Each COUNTY Department or Division will issue a separate identifying Purchase Order.

37. PRICE ADJUSTMENT REQUESTS

Commencing on date of award, prices shall not be subject to change during the initial first (1) year term, thereafter, there may be price adjustments. All price adjustment requests, including suitable proof, shall be submitted, at least thirty (30) calendar days in advance of SUCCESSFUL BIDDER'S expectation of price increase commencement, to the Clark County, Nevada, Administrative Services Department, Purchasing Manager, 500 South Grand Central Parkway, Las Vegas, Nevada 89155. Price increases shall not be retroactive. A price adjustment can only occur if SUCCESSFUL BIDDER has been notified in writing of COUNTY'S approval of the new Price(s). Only one (1) written price adjustment request(s) will be accepted from SUCCESSFUL BIDDER per one (1) year term. The reference months/period and indexes to be used to determine price adjustments will be the most recent published index between 14-16 months prior (using the final index) and 2-4 months prior (using the first-published index) to the anniversary date of the Contract, using the price index specified below.

Consumer Price Index (CPI) or Producer Price Index (PPI): CUSR000554501A. Series ID: New Cars and Trucks will be used as the index for the price adjustments. The price adjustment per year may be the lesser of the percent of CPI or PPI change or three (3) percent for an increase or decrease.

❑ Suitable Proof:

Print-out of PPI index and calculated increase, Letter from Manufacturer/ Distributor.

38. STATE OF NEVADA LEGAL HOLIDAYS

SUCCESSFUL BIDDER is advised that below there are ten (10) firm legal holidays and eleven (11) when December 31st falls on Friday.

Martin Luther King's Birthday
Presidents' Day
Memorial Day
Independence Day
Labor Day
Nevada Admission Day
Veteran's Day
Thanksgiving Day and the Friday After
Christmas Day
New Year's Day

SUCCESSFUL BIDDER is required to verify dates with COUNTY'S representative prior to the commencement of work.

II -GENERAL CONDITIONS

BID NO. 603858-15
VARIOUS CURRENT PRODUCTION MODEL UTILITY VEHICLES

1. ASSIGNMENT OF CONTRACTUAL RIGHTS

SUCCESSFUL BIDDER will not assign, transfer, convey or otherwise dispose of CONTRACT or its right, title, or interest in, or to the same, or any part thereof, without previous written consent of COUNTY and any sureties.

2. AUDITS

The performance of CONTRACT by SUCCESSFUL BIDDER is subject to review by COUNTY to insure CONTRACT compliance. SUCCESSFUL BIDDER agrees to provide COUNTY any and all information requested that relates to the performance of CONTRACT. All requests for information will be in writing to SUCCESSFUL BIDDER. Time is of the essence during the audit process. Failure to provide the information requested within the timeline provided in the written information request may be considered a material breach of contract and be cause for suspension or termination of CONTRACT.

3. AUTHORITY

COUNTY is bound only by COUNTY agents acting within the actual scope of their authority. COUNTY is not bound by actions of one who has apparent authority to act for COUNTY. The acts of COUNTY agents which exceed their contracting authority do not bind COUNTY.

4. BIDS ARE NOT TO CONTAIN CONFIDENTIAL / PROPRIETARY INFORMATION

Bids must contain sufficient information to be evaluated without reference to any confidential or proprietary information. In accordance with NRS 239.010, Bidders shall not include any information in their bid that they would not want to be released to the public. Any bid submitted that is marked “Confidential” or “Proprietary,” or that contains materials so marked, may be returned to Bidder and may not be considered for award.

5. CLARK COUNTY’S PROPERTY

All property owned by COUNTY and furnished to SUCCESSFUL BIDDER for the purpose of performance under this Bid will be identified and marked as COUNTY’S property and adequately insured by SUCCESSFUL BIDDER for COUNTY’S protection. In the event that COUNTY’S property becomes lost or damaged to any extent while in SUCCESSFUL BIDDER’S possession from any cause, including faulty workmanship or negligent acts by SUCCESSFUL BIDDER, its agents or its employees, SUCCESSFUL BIDDER agrees to replace such property or reimburse COUNTY for the value or expense of replacement, whichever is greater, in accordance with COUNTY request.

6. COLLECTION AND PAYMENT OF SALES TAX

In accordance with NRS 372.123, any Bidder that sells tangible personal property to any commercial business in the State of Nevada is required to possess a Nevada Sales Tax Permit and shall collect and pay the taxes as defined in NRS Chapters 372 and 374. Permit information can be obtained by contacting the Nevada State Department of Taxation at (702) 486-2300.

7. COLLUSION AND ADVANCE DISCLOSURES

Pursuant to NRS 332.820 evidence of agreement or collusion among Bidders and prospective Bidders acting to illegally restrain freedom of competition by agreement to bid a fixed price, or otherwise, shall render the bids of such Bidders void.

Advance disclosures of any information to any particular Bidder which gives that particular Bidder any advantage over any other interested Bidders, in advance of the bid opening, whether in response to advertising or an informal request for bids, made or permitted by a member of the governing body or an employee or representative thereof, shall operate to void all bids received in response to that particular request for bids.

8. CONSUMPTION ESTIMATES

The quantities appearing in the Bid Form are approximate only and are prepared for the solicitation of bids. Payment to SUCCESSFUL BIDDER will be made only for the actual quantities of items furnished in accordance with the bid and it is understood that the scheduled quantities of items to be furnished may be increased, decreased or omitted without, in any way, invalidating bid prices.

9. CONTRACT AMENDMENTS

Notwithstanding any provision herein to the contrary, and pursuant to NRS 104.2306, and recognizing the constraints inherent in public bidding, COUNTY reserves the right to request modification at any time to the scope, frequency, estimated quantities or the timing of SUCCESSFUL BIDDER'S obligations under CONTRACT, in whatever manner COUNTY determines, in good faith, to be reasonably necessary and to be in the best interests of the public. Both parties agree that, should any modifications to CONTRACT be made during CONTRACT term, a written amendment detailing those elements shall be executed by SUCCESSFUL BIDDER and the BCC or their authorized representative.

10. DISCLOSURE OF OWNERSHIP / PRINCIPALS

Any Bidder recommended for award of CONTRACT by the Board of County Commissioners is required to provide the information on the attached "Disclosure of Ownership/Principals" form. The form shall be submitted to COUNTY within twenty-four (24) hours after request. Failure to fill out the subject form by Bidders shall be cause for rejection of the bid.

11. DRUG-FREE WORKPLACE

SUCCESSFUL BIDDER agrees to comply with all applicable state and federal laws regarding a drug-free workplace. SUCCESSFUL BIDDER shall make a good faith effort to ensure that all of its employees, while working on COUNTY property, will not purchase, use, be under the influence of, or possess illegal drugs or alcohol or abuse prescription drugs in any way.

12. EMPLOYMENT OF UNAUTHORIZED ALIENS

In accordance with the Immigration Reform and Control Act of 1986, SUCCESSFUL BIDDER agrees that it will not employ unauthorized aliens in the performance of CONTRACT.

13. FEDERAL, STATE, LOCAL LAWS

All Bidders shall comply with all Federal, State and local laws relative to conducting business in Clark County. The laws of the State of Nevada will govern as to the interpretation, validity, and effect of this bid, its award, and any contract entered into.

14. FISCAL FUNDING OUT

COUNTY reasonably believes that funds can be obtained sufficiently to make all payments during the term of CONTRACT. If COUNTY does not allocate funds to continue the purchase of the product or service, in accordance with NRS 354.626, CONTRACT shall be terminated when appropriated funds expire.

15. FORCE MAJEURE

SUCCESSFUL BIDDER shall be excused from performance hereunder during the time and to the extent that it is prevented from obtaining, delivering, or performing, by acts of God, fire, war, loss or shortage of transportation facilities, lockout or commandeering of raw materials, products, plants or facilities by the government. SUCCESSFUL BIDDER shall provide COUNTY satisfactory evidence that nonperformance is due to cause other than fault or negligence on its part.

16. GOVERNING LAW/VENUE OF ACTION

CONTRACT shall be construed and enforced in accordance with the laws of the State of Nevada. Any action at law or other judicial proceeding for the enforcement of any provision shall be instituted in the County of Clark, State of Nevada.

17. GOVERNING ORDER OF BIDDING AND CONTRACT DOCUMENTS

The bidding and CONTRACT documents include various divisions, sections, and conditions which are essential parts for the work to be provided by SUCCESSFUL BIDDER. A requirement occurring in one is as binding as though occurring in all. They are intended to be complementary and to describe and provide for complete work. In case of discrepancy, the following precedence will govern:

A. Amendment

B. General Conditions

C. Addenda

D. Instructions to Bidders

E. Federal Requirements (If Applicable)

F. Special Conditions

G. Technical Specifications

18. INDEMNITY

SUCCESSFUL BIDDER agrees, by entering into CONTRACT, regardless of the coverage provided by any insurance policy, to pay all costs necessary to indemnify, defend, and hold COUNTY harmless from any and all claims, demands, actions, attorney's fees, costs, and expenses based upon or arising out of any acts, errors, omissions, fault or negligence of SUCCESSFUL BIDDER or its principals, employees, subcontractors or other agents while performing services under CONTRACT. SUCCESSFUL BIDDER shall indemnify, defend, and hold harmless COUNTY for any attorney's fees or other costs of defense, even if the allegations of the claim are groundless, false or fraudulent.

19. INVOICING

Invoicing for bid items are to be sent to the location as identified in the purchase order(s). Invoices are to be sent within thirty (30) calendar days of the delivery of the product or completion of the work. Payment of invoices will be made within thirty (30) calendar days, unless otherwise specified, after receipt of an accurate invoice that has been reviewed and approved by the applicable department's authorized representative. In accordance with NRS 244.250 COUNTY shall not provide payment on any invoice SUCCESSFUL BIDDER submits after six (6) months from the date SUCCESSFUL BIDDER provides goods, performs services, or provides deliverables or milestones.

All invoices should include the following information:

A. Company Name

B. Complete Address (including street, city, state, and zip code)

C. Telephone Number

D. Contact Person

E. Itemized description of products delivered (including quantities) or services rendered (including dates)

F. Clark County Purchase Order Number

G. Company's Tax Identification Number

H. Bid Number

I. Itemized pricing and total amount due (excluding Sales and Use Tax)

J. Percentage Discounts/ Payment Terms (if offered)

K. Company's Invoice Number

L. Clark County Work Order Number(s)

SUCCESSFUL BIDDER is responsible to insure that all invoices submitted for payment are in strict accordance with the price(s) offered on the Bid Form. If overcharges are found, COUNTY may declare SUCCESSFUL BIDDER in breach of contract, terminate CONTRACT, and designate SUCCESSFUL BIDDER as non-responsible if responding to future invitations to bid.

20. INVOICE AUDITS

SUCCESSFUL BIDDER shall provide to COUNTY, within ten (10) business days of COUNTY'S request, a report to validate that the price(s) charged are in accordance with the price(s) offered on SUCCESSFUL BIDDER'S Bid Form. The format of the report will depend on the pricing structure provided on the Bid Form. The report shall be subject to review and approval by COUNTY'S using department(s) and Internal Audit Department. Discrepancies found in the report will require SUCCESSFUL BIDDER to update the report no later than five (5) business days after notification by COUNTY. In the event that SUCCESSFUL BIDDER undercharged COUNTY, COUNTY shall reimburse SUCCESSFUL BIDDER within ten (10) business days. In the event that SUCCESSFUL BIDDER overcharged COUNTY, SUCCESSFUL BIDDER shall reimburse COUNTY within ten (10) business days. If overcharges are found, COUNTY may declare SUCCESSFUL BIDDER in breach of contract, terminate CONTRACT, and designate SUCCESSFUL BIDDER as non-responsible if responding to future invitations to bid.

21. NON-DISCRIMINATION

The BCC is committed to promoting full and equal business opportunity for all persons doing business in Clark County. SUCCESSFUL BIDDER acknowledges that COUNTY has an obligation to ensure that public funds are not used to subsidize private discrimination. SUCCESSFUL BIDDER recognizes that if they or their subcontractors are found guilty by an appropriate authority of refusing to hire or do business with an individual or company due to reasons of race, color, religion, sex, sexual orientation, gender identity or expression, age, disability, national origin, or any other protected status, COUNTY may declare SUCCESSFUL BIDDER in breach of contract, terminate CONTRACT, and designate SUCCESSFUL BIDDER as non-responsible.

22. NON-ENDORSEMENT

As a result of the selection of SUCCESSFUL BIDDER to supply goods or services, COUNTY is neither endorsing nor suggesting that SUCCESSFUL BIDDER'S service is the best or only solution. SUCCESSFUL BIDDER agrees to make no reference to COUNTY in any literature, promotional material, brochures, sales presentations, or the like, without the express written consent of COUNTY.

23. OUT OF STATE SUPPLIERS

Out of state suppliers shall accept collect calls or provide a toll free telephone number for the placement of orders.

24. PARTIAL PAYMENTS

Partial payment requests will be accepted only at the sole discretion of COUNTY.

25. PATENT INDEMNITY

A. SUCCESSFUL BIDDER hereby indemnifies and shall defend and hold harmless COUNTY, its officers, employees, agents, its officers, and employees, respectively, from and against all claims, losses, costs, damages, and expenses, including attorney's fees, incurred by COUNTY, respectively, as a result of or in connection with any claims or actions based upon infringement or alleged infringement of any patent and arising out of the use of the equipment or materials furnished under CONTRACT by SUCCESSFUL BIDDER, or out of the processes or actions employed by, or on behalf of SUCCESSFUL BIDDER in connection with the performance of CONTRACT. SUCCESSFUL BIDDER shall, at its sole expense, promptly defend against any such claim or action unless directed otherwise by COUNTY; provided that COUNTY or its construction manager shall have notified SUCCESSFUL BIDDER upon becoming aware of such claims or actions, and provided further that SUCCESSFUL BIDDER'S aforementioned obligations shall not apply to equipment, materials, or processes furnished or specified by COUNTY.

B. SUCCESSFUL BIDDER shall have the right, in order to avoid such claims or actions, to substitute at its expense non infringing equipment, materials, or processes, or to modify such infringing equipment, materials and processes so they become non infringing, or obtain the necessary licenses to use the infringing equipment, material or processes, provided that such substituted and modified equipment, materials and processes shall meet all the requirements and be subject to all the provisions of CONTRACT.

26. PUBLIC RECORDS

COUNTY is a public agency as defined by state law, and as such, is subject to the Nevada Public Records Law (Chapter 239 of the Nevada Revised Statutes). Under the law, all of COUNTY'S records are public records (unless otherwise declared by law to be confidential) and are subject to inspection and copying by any person. All bid documents are available for review following the bid opening.

27. PURCHASE ORDERS

The Purchasing and Contracts Division will issue a purchase order(s) which will authorize SUCCESSFUL BIDDER to deliver and invoice for the product(s) or service(s) offered.

28. RIGHT OF INSPECTION AND REJECTION

All goods and services purchased under this bid will be subject to inspections, tests and approval/acceptance by COUNTY. It is acknowledged that many of the goods contained in closed packages may not be inspected until such time as they are used, and that the inspections and rejection rights will continue until those packages are opened and inspected, notwithstanding prior payment. If specifications or warranties are not met, material and equipment will be returned at SUCCESSFUL BIDDER'S expense. Nonconforming goods may be returned to SUCCESSFUL BIDDER freight collect at which time risk of loss will pass to SUCCESSFUL BIDDER upon COUNTY'S delivery to common carrier or retrieved by SUCCESSFUL BIDDER at which time risk of loss will pass to SUCCESSFUL BIDDER at time of retrieval.

29. SEVERABILITY

If any terms or provisions of CONTRACT shall be found to be illegal or unenforceable, then such term or provision shall be deemed stricken and the remaining portions of CONTRACT shall remain in full force and effect.

30. SUBCONTRACTS

Services specified in CONTRACT shall not be subcontracted by SUCCESSFUL BIDDER, without the written approval of COUNTY. Approval by COUNTY of SUCCESSFUL BIDDER'S request to subcontract or acceptance of or payment for subcontracted work by COUNTY shall not in any way relieve SUCCESSFUL BIDDER of responsibility for the professional and technical accuracy and adequacy of the services performed. SUCCESSFUL BIDDER shall be and remain liable for all damages to COUNTY caused by negligent performance or non-performance of services performed under CONTRACT by SUCCESSFUL BIDDER'S subcontractor.

31. SUBCONTRACTOR / INDEPENDENT CONTRACTOR

SUCCESSFUL BIDDER represents that it is fully experienced and properly qualified to perform the class of work provided for herein, and that it is properly licensed, equipped, organized and financed to perform such work. SUCCESSFUL BIDDER shall act as an independent SUCCESSFUL BIDDER and not as the agent of COUNTY in performing CONTRACT. SUCCESSFUL BIDDER shall maintain complete control over its employees and all of its Subcontractors. Nothing contained in CONTRACT or any subcontract awarded by SUCCESSFUL BIDDER shall create any contractual relationship between any such Subcontractor and COUNTY. SUCCESSFUL BIDDER shall perform all work in accordance with its own methods subject to compliance with CONTRACT.

32. SUSPENSION BY THE COUNTY FOR CONVENIENCE

A. COUNTY may, without cause, order SUCCESSFUL BIDDER in writing to suspend, delay or interrupt the work in whole or in part for such period of time as COUNTY may determine.

B. In the event COUNTY suspends performance of SUCCESSFUL BIDDER for an aggregate period in excess of sixty (60) calendar days, SUCCESSFUL BIDDER shall be entitled to an equitable adjustment of the compensation payable to SUCCESSFUL BIDDER under this Bid to reimburse SUCCESSFUL BIDDER for additional costs occasioned as a result of such suspension of performance by COUNTY. Equitable adjustment shall be based on appropriated funds and approval by COUNTY.

C. No equitable adjustment will be made if performance is, was or would have been so suspended, delayed or interrupted by another cause for which SUCCESSFUL BIDDER is responsible.

33. TAXES

COUNTY is a political subdivision of the State of Nevada and under the provisions of Nevada Revised Statute (NRS) 372.325 is exempt from the payment of Sales and Use Tax (Employee Identification Number 88-6000028). A copy of the tax exempt letter is available upon request. The bid price(s) must be net, exclusive of these taxes.

34. TERMINATION FOR CAUSE

If SUCCESSFUL BIDDER fails to perform in accordance with the agreed terms, conditions, or warranties applicable to CONTRACT, COUNTY may **immediately** terminate all or part of CONTRACT upon written notice of intent to terminate without any liability by COUNTY to SUCCESSFUL BIDDER. In the event of termination for cause, COUNTY may cancel any delivery or service and purchase the product or service elsewhere on such terms or in such manner as COUNTY may deem appropriate and SUCCESSFUL BIDDER shall be liable to COUNTY for any excess cost or other expenses incurred by COUNTY.

35. TERMINATION FOR CONVENIENCE

COUNTY reserves the right to terminate CONTRACT in whole or part at any time whenever COUNTY shall determine that such a termination is in the best interest of COUNTY without penalty or recourse upon thirty (30) calendar days written notice of intent to terminate. In the event that COUNTY elects to terminate CONTRACT, the termination request will be submitted to the BCC or the Clark County Administrative Services Department for approval.

36. TITLE AND RISK OF LOSS

The title and risk of loss of material or service shall not pass to COUNTY until material is delivered to the specific location, quantities are verified, and the material is inspected for damage or service is completed as specified.

37. USE BY OTHER GOVERNMENT ENTITIES

Nevada Revised Statutes 332.195 allows local governments to join or use the contracts of other local governments or the State of Nevada, with the authorization of contracting Supplier.

38. WARRANTY

SUCCESSFUL BIDDER warrants that the goods and services covered under this bid will conform to applicable specifications, instructions, drawings, data and samples, will be merchantable and of good material and workmanship, free from defects and will be fit and sufficient for the purposes intended. SUCCESSFUL BIDDER shall guarantee all workmanship, materials, and equipment they have furnished for a period of one (1) year after the final acceptance of the equipment or materials or for the length of the current manufacturer's warranty, whichever is longer. If during the guarantee period, any defect or faulty materials are found, it shall immediately, upon notification by COUNTY, proceed at its own expense to replace and repair same, together with any damage to all finishes, fixtures, equipment, and furnishings that may be damaged as a result of this defective equipment or workmanship. Acceptance or receipt of payment for goods or services shall not constitute a waiver of any warranty.

III - SPECIAL CONDITIONS

BID NO. 603858-15
VARIOUS CURRENT PRODUCTION MODEL UTILITY VEHICLES

1. DOCUMENTATION SUBMITTAL REQUIRED BY APPARENT LOW BIDDER

Apparent low Bidder shall furnish the following information and documents within twenty-four (24) hours of COUNTY'S request:

A. A copy of the product's printed specifications advertising literature or catalogs as specified.

B. A copy of the product's standard warranty.

C. Completed "Disclosure of Ownership" form.

D. A copy of current applicable Clark County Business License.

2. SERVICE AND INSPECTION INSTRUCTIONS - COMPLETION OF CONTRACT

Prior to delivery, the product shall be completely inspected and serviced by the delivering dealer or the manufacturer's pre-delivery service center. A copy of the manufacturer's standard pre-delivery service check list shall be completed for the product, signed by a representative of the organization performing the inspection/service and delivered with the product.

The product may be inspected at time of delivery, by an authorized representative of COUNTY, for workmanship, appearance, proper functioning of all equipment and systems, and conformance to all other requirements of this specification. In the event deficiencies are detected, the product will be rejected to make the necessary repairs, adjustments or replacements. Payment or the commencement of a discount period (if applicable) will not be made until the corrective action is made the product is re-inspected and accepted. If the product is accepted at delivery and later rejected because of deficiencies, it shall be the dealer's responsibility to pick up the product, make the necessary corrections and redeliver the product for re-inspection and acceptance at no additional cost to COUNTY.

3. DEALER'S REPORT OF SALE - COMPLETION OF CONTRACT

Dealer's Report of Sale shall be addressed to:

Clark County Automotive
4241 Stephanie Street
Las Vegas, Nevada 89122

4. TITLE FEES

The SUCCESSFUL BIDDER shall pay all title fees.

5. NOTICE OF DELIVERY(AUTOMOTIVE ONLY)

COUNTY shall be given twenty-four (24) hours notice prior to delivery in order to establish a time, date and location. Notify David Johnson, Manager of Automotive Services, at (702) 455-8556. At the time of delivery SUCCESSFUL BIDDER shall provide the necessary documents and keys, as specified on the attachment, as per type of vehicle(s) being delivered. If the required documents and keys are not available at the time of delivery the vehicle(s) **will not be accepted**.

DOCUMENTS AND KEYS REQUIRED AT DELIVERY

VEHICLE TYPE	DEALERS REPORT OF SALE IN-STATE	OR	CERTIFICATE OF ORIGIN OUT OF STATE	ODOMETER STATEMENT	PURCHASE ORDER (COPY)	INVOICE	KEYS (PER BID)	MANUAL (PER BID)
HEAVY DUTY TRUCKS NOT TO EXCEED 12,000 LBS. LICENSED	X	OR	X	X	X	X	X	X

NOTE: Vehicles without the indicated documents and keys will not be accepted.

6. FUEL

Each Vehicle(s) shall be delivered with a full tank of fuel.

7. MILEAGE

Each Vehicle(s) shall be delivered with less than fifty (50) miles on the odometer.

8. KEYS

There shall be three (3) sets of keys for each vehicle and all locking compartments or vandal covers provided at the time of delivery.

9. COMPONENT INSTALLATION

All components supplied shall be factory or dealer installed and shall be as advertised in current published literature unless otherwise stated (**Literature shall be provided upon request**).

10. DEALER'S NAMEPLATES AND DECALS

All vehicles(s) shall be delivered free of dealer nameplates, license plate holders or advertisement decals.

11. ORDER CONFIRMATION

SUCCESSFUL BIDDER shall provide, within ten (10) business days of receipt of purchase order, a confirmation from the manufacturer showing the vehicles have been ordered. The confirmation may be provided via facsimile to:

Clark County Purchasing Department
Attn: Sandra Mendoza, Purchasing Analyst II
Fax: (702) 386-4914

12. MANUALS

There shall be one part, one repair, and one operator manuals; or a PC friendly CD manual provided for each vehicle at time of delivery.

13. LOCATION AND HOURS

Deliveries shall be made to the 4241 Stephanie Street, Las Vegas, Nevada 89122, Monday through Friday (excluding COUNTY'S holidays), between the hours of 8:00 a.m. through 4:00 p.m.

14. MAXIMUM DELIVERY TIME

Maximum delivery time is one hundred twenty (120) calendar day(s). Failure to offer a delivery time within the maximum number of days specified may be considered a substantial deviation and be cause for rejection. Time is of the essence and failure to meet the delivery time specified shall constitute a breach of contract and may result in termination of CONTRACT.

15. OUT OF AREA DELIVERY REQUIREMENTS

If the successful Bidder is located outside of the Las Vegas Valley, it is required to have an Authorized Dealer located in the Las Vegas Valley who will act as its representative. All vehicles will be delivered to this local Authorized Dealer Representative and not directly to Clark County. This local Authorized Dealer Representative will be responsible for the Pre-delivery inspection (PDI), all dealer prep, delivery, and any necessary documentation and paperwork, including State of Nevada VIN inspection.

16. F.O.B. DESTINATION - FREIGHT PRE-PAID

SUCCESSFUL BIDDER shall pay all freight charges. SUCCESSFUL BIDDER shall file all claims and bears all responsibility for the products from the point of origin to COUNTY'S destination. All prices shall be F.O.B. the delivery points as required. All prices shall include delivery, as well as any necessary unloading.

17. PARTIAL SHIPMENTS

Partial shipments will not be permitted.

18. TRAINING

Training, in the form of orientation, shall be provided to COUNTY'S personnel by a qualified factory representative or the SUCCESSFUL BIDDER'S personnel, in the proper operation techniques, including care and maintenance of the product. This training shall take place at 4241 Stephanie Street, Las Vegas, Nevada 89122, at the SUCCESSFUL BIDDER'S expense.

19. FAILURE TO DELIVER

In the event that SUCCESSFUL BIDDER fails to deliver the product or service in accordance with the terms and conditions of CONTRACT, COUNTY shall have the option to either terminate CONTRACT or temporarily procure the product or service from another supplier. If the product or service is procured from another supplier, SUCCESSFUL BIDDER shall pay to COUNTY any difference between the bid price and the price paid to the other supplier.

20. DAMAGED OR DEFECTIVE PRODUCTS

SUCCESSFUL BIDDER shall replace, at no cost to COUNTY, damaged or defective products within five (5) business day(s) after notice. This shall include freight and any and all other associated costs. Failure to do so will cause such products to be procured from another supplier. If the product is procured from another supplier, SUCCESSFUL BIDDER shall pay COUNTY any difference between the bid price and the price paid to the other supplier.

21. EXTENDED WARRANTY(S)

Specify all factory and component manufacturers' standards and extended warranties. SUCCESSFUL BIDDER shall list any extended warranties and costs associated with them that may be purchased by COUNTY. (PLEASE NOTE: THE COST OF EXTENDED WARRANTIES SHALL NOT BE INCLUDED IN THE BID PRICE. THE EXTENDED WARRANTY DESCRIPTION AND PRICE SHALL BE LISTED SEPARATELY. COUNTY SHALL HAVE THE OPTION OF PURCHASING THE EXTENDED WARRANTIES SEPARATELY, BASED ON COUNTY BUDGETED APPROPRIATIONS) SUCCESSFUL BIDDER shall provide copy of warranties upon request.

IV - TECHNICAL SPECIFICATIONS

BID NO. 603858-15
VARIOUS CURRENT PRODUCTION MODEL UTILITY VEHICLES

_____
Name of Firm

INTENT:

It is the intent of these specifications to provide a vehicle(s) that will conform to the specifications, and be suitable for continuous use by COUNTY. The vehicle(s) offered shall be new, unused, the current production model and conform to the specifications provided below.

The vehicle(s) shall comply with all Federal and State of Nevada Emission Control Regulations, and Safety Standards in effect at the time of delivery to COUNTY.

These specifications shall be construed as minimum requirements. Should the manufacturer's current published data or specifications exceed these, they shall be considered as minimum and be furnished by Bidder.

Any deviation taken at the time of or after bid submittal may render the bid non-responsive. If a Bidder is unable to meet the Technical Specifications, Bidder MUST complete the attached **Exhibit A** and submit it to the Purchasing Analyst at least five (5) business days prior to the scheduled **PRE-BID CONFERENCE**. It shall be the sole responsibility of the Bidder to ensure that the Purchasing Analyst has been properly notified, **PRIOR TO THE PRE-BID CONFERENCE** of the Bidder's deviation to the Technical Specifications.

It is the sole responsibility of the BIDDER to ensure that the Purchasing Analyst has been properly notified of BIDDER'S inability to meet the specification, prior to the **PRE-BID CONFERENCE.**

BIDDERS MUST RETURN THE ORIGINAL OR A PHOTOCOPY OF THIS FORM AND MAKE AN ENTRY FOR EACH SPECIFICATION IN THE SPACE PROVIDED OPPOSITE THE SPECIFICATIONS, INDICATING ANY VARIANCES IN THE SPECIFICATION. IF THERE IS NOT ENOUGH SPACE, ATTACH AN ADDITIONAL SHEET OF PAPER.

ITEM NO. 1

CURRENT PRODUCTION MODEL 1-TON 4X4 CAB & CHASSIS WITH DUAL REAR WHEELS WITH UTILITY BODY WITH TOWING PACKAGE

SPECIFICATION NO. 1

GENERAL DESCRIPTION:

Vehicle to be manufacturer's conventional design full size diesel, 1-ton Cab & Chassis, 4X4, dual rear wheels with a 60" cab to axle with a utility body to match. Cab & chassis to have a minimum GVW rating of 13,000 pounds. All components supplied shall be factory installed and shall be as advertised in current published literature unless otherwise stated.

SPECIFICATION NO. 2

STEERING/BRAKES/SUSPENSION:

a. Steering: Power assist with Heavy Duty Stabilizer.

b. Brakes: Power assist with anti-lock on all wheels.

c. Tires/wheels: Seven tubeless radial with the most aggressive mud and snow rated tires available from the manufacturer (M&S rating must appear on tires), including full-size spare. All wheels must match. Size and ratings shall meet or exceed maximum allowable GVW imposed.

SPECIFICATION NO. 3

POWER TRAIN:

a. Engine: Largest diesel engine available from manufacturer, turbo-charged with fuel injection system and water separator type fuel filter.

b. Transmission: Automatic, with trailer towing package, including a transmission oil cooler.

c. Transfer Case: Shall be electronic 4X4 with capability to shift on the fly.

d. Differentials: Shall be locking type front and rear with a minimum ration of 4.1 limited slip.

SPECIFICATION NO. 4

CHARGING/STARTING SYSTEM:

Maximum output and capacity alternator and battery available from vehicle manufacturer for model offered.

SPECIFICATION NO. 5

COOLING/AIR CONDITIONING:

a. Radiator: Maximum capacity and frontal area radiator available for vehicle model offered with coolant recovery system.

b. Air Conditioning: Factory-installed air conditioning with integral fresh air heater and defroster.

SPECIFICATION NO. 6

EXTERIOR:

a. Bumpers: Front Manufacturer's standard.

b. Mirrors: Electronic controlled Left and Right outside, with small convex mirror integrated in housing. Factory standard size for vehicle modeled offered

c. Moldings and appearance package: Standard for vehicle model offered.

d. Fuel Tank: Shall be the largest single capacity fuel tank available from manufacturer for model offered.

e. Window Tint: Factory standard.

f. Heavy gauge steps or nerf bars for ease of access to cab.

SPECIFICATION NO. 7

TRAILER TOWING PACKAGE:

Maximum capacity available for model offered. A heavy-duty frame mounted Class Three weight distribution designed receiver hitch capable of accepting a 2-inch hitch. In addition, a 7-way RV style light connector installed and wired to truck lighting system.

SPECIFICATION NO. 8

INTERIOR:

a. Seat: Shall be equipped with split bench, cloth or vinyl with cloth inserts.

b. Trim: Vinyl or cloth door panels and armrests.

c. Floor mats: Driver and passenger side.

d. Factory AM/FM/CD Player or latest technology, with Blue Tooth compatibility.

e. Factory installed cruise control.

f. Standard gauge package offered by manufacturer for model offered.

g. Additional dash mounted 12-volt power source.

h. Factory installed power windows and door locks.

i. Manufacturer Approved Reverse vehicle aid sensor. This will include an audible alarm in the cab that will sound when the rear of the vehicle get's close to an object and will increase in frequency the closer the vehicle gets to the object.

j. Manufacturer Approved Rear View Camera.

SPECIFICATION NO. 9

UNDERCOATING:

Standard for manufacturer with exception of drive train and fuel tank.

SPECIFICATION NO. 10

FUEL:

Vehicle shall be delivered with a full tank of fuel.

SPECIFICATION NO. 11

COLOR:

To be manufacturer's standard white with clear coat.

SPECIFICATION NO. 12

UTILITY BODY GENERAL DESCRIPTION:

Shall be a Knapheide Model#5108D54FJ40 Utility/Service body to be mounted on a new current production year cab & chassis with a 60" cab to axle. All components supplied shall be factory installed and shall be as advertised in current published literature unless otherwise stated.

SPECIFICATION NO. 13

SHELVING:

a. Shelving and compartment partitions shall be removable allowing creation of various compartment arrangements.
b. 4 full-height compartment partitions shall be furnished.
c. Compartment shelving shall be adjustable on 2" centers.
d. 16 gauge galvanneal steel shelves are to be slotted for dividers on 2" centers.
e. 20 fully folded dividers for the compartment shelving.
f. 16 additional fully folded dividers for the top compartment opening section.
g. Material hook bar assembly shall be provided with 3 hooks.

SPECIFICATION NO. 14

TAILGATE:

a. 11 ½" high.
b. Nylon coated stainless steel cables to support and secure tailgate.
c. Tailgate shall drop down for dock style loading.

SPECIFICATION NO. 15

PRIME PAINT:

a. All body components shall receive a 5-stage zinc phosphate pretreatment and baked on primer.
b. A second primer coating shall be applied after final body assembly for maximum corrosion resistance.

SPECIFICATION NO. 16

UNDER COATING:

Entire body underside shall be fully under coated with an automotive grade undercoating.

SPECIFICATION NO. 17

COLOR:

a. Body shall be painted inside and out with the OE paint color of cab & chassis that it will be installed on.
b. Clear coat shall be applied.

SPECIFICATION NO. 18

DOOR LOCKS:

a. All doors shall be lockable and keyed alike.
b. 4 sets of keys for door locks shall accompany body when completed.

SPECIFICATION NO. 19

LADDER RACK:

Shall extend the full width of the inside of the utility bed and from the rear of the utility bed to the front of the cab with expanded metal front and rear.

SPECIFICATION NO. 20

MANUALS:

One part's, repair, and operator's manuals shall be supplied to Clark County at time of delivery of vehicles. One CD/DVD PC friendly parts and repair manual in lieu of the paper back books if available, shall be supplied to Clark County at time of delivery of vehicle.

SPECIFICATION NO. 21

KEYS:

Vehicle **must** be equipped with Factory Installed **Three** (3) key fobs for keyless entry and three keys for all locks and they shall be provided at time of delivery to Clark County.

SPECIFICATION NO. 22

WARRANTY:

Specify all factory, and component manufacturer's standard and extended warranties. Bidder shall list any extended warranties and costs associated with them that may be purchased by Clark County. (PLEASE NOTE: THE COST OF EXTENDED WARRANTIES IS NOT TO BE INCLUDED IN THE BID PRICE. THE EXTENDED WARRANTY DESCRIPTION AND PRICE WILL BE LISTED SEPERATELY AS AN OPTION. CLARK COUNTY SHALL HAVE THE OPTION TO PURCHASE THE EXTENDED WARRANTIES SEPARATELY.)

BIDDERS MUST RETURN THE ORIGINAL OR A PHOTOCOPY OF THIS FORM AND MAKE AN ENTRY FOR EACH SPECIFICATION IN THE SPACE PROVIDED OPPOSITE THE SPECIFICATIONS, INDICATING ANY VARIANCES IN THE SPECIFICATION. IF THERE IS NOT ENOUGH SPACE, ATTACH AN ADDITIONAL SHEET OF PAPER.

ITEM NO. 2

CURRENT PRODUCTION MODEL 1-TON DIESEL 4X2 CUTAWAY VAN CHASSIS WITH DUAL REAR WHEELS INTEGRATED UTILITY BODY

SPECIFICATION NO. 1

GENERAL DESCRIPTION:

Vehicles to be manufacturer's conventional design full-sized diesel, 1-ton Cutaway Van Chassis, 4X2, dual rear wheel with 80" cab to axle dimension and Utility body to match. Cutaway Van Chassis to have a minimum GVW rating of 10,000-pounds. All components supplied shall be factory-installed and shall be as advertised in current published literature unless otherwise stated.

SPECIFICATION NO. 2

SUSPENSION/STEERING/BRAKES:

a. Steering: Power assist.

b. Brakes: Power assist with anti-lock on all wheels.

c. Tires/Wheels: Seven tubeless radial with an all-season rating available from manufacturer, this includes a spare. Size and ratings shall meet or exceed maximum allowable GVW imposed.

SPECIFICATION NO. 3

POWER TRAIN:

a. Engine: Largest diesel engine available from manufacturer, turbo-charged with fuel injection system and water separator type fuel filter.

b. Transmission: Automatic with factory installed transmission cooler and trailer towing package.

SPECIFICATION NO. 4

CHARGING/STARTING SYSTEM:

Maximum output and capacity alternator and battery available from vehicle manufacturer for model offered.

SPECIFICATION NO. 5

TRAILER TOWING PACKAGE:

Maximum capacity available for model offered. A heavy-duty frame mounted Class Three weight distribution designed receiver hitch capable of accepting a 2-inch hitch. In addition, a 7-way RV Style light connector installed and wired to truck lighting system.

SPECIFICATION NO. 6

COOLING/AIR CONDITIONING:

a. Radiator: Maximum capacity and frontal area radiator available for vehicle model offered with coolant recovery system.

b. Air Conditioning: Factory-installed air conditioning with integral fresh air heater and defroster.

SPECIFICATION NO. 7

EXTERIOR:

a. Bumpers: Front manufacturer's standard.

b. Mirrors: Electronic controlled Left and Right outside with full extension capability for complete view along side of utility body, with small convex mirror integrated in housing.

c. Moldings and Appearance Package: Standard for vehicle model offered.

d. Fuel Tank: Shall be the largest optional capacity fuel tank available from manufacturer for model offered.

e. Tint: Factory standard.

SPECIFICATION NO. 8

INTERIOR:

a. Seat: Bucket, cloth or vinyl with cloth inserts.

b. Trim: Vinyl or cloth door panels and armrests.

c. Standard gauge package offered by manufacturer for model offered.

d. Floor Mats: Driver and passenger side.

e. Factory AM/FM/CD Player or latest technology, with Blue Tooth compatibility.

f. Additional dash mounted 12-volt power source.

g. Factory installed power windows and door locks.

h. Factory installed cruise control.

i. Manufacturer Approved Reverse vehicle aid sensor. This will include an audible alarm in the cab that will sound when the rear of the vehicle gets close to an object and will increase in frequency the closer the vehicle gets to the object.

j. Manufacturer Approved Rear View Camera.

SPECIFICATION NO. 9

UNDERCOATING:

Standard for manufacturer with exception of drive train and fuel tank.

SPECIFICATION NO. 10

FUEL:

Vehicles shall be delivered with fuel tank full of fuel.

SPECIFICATION NO. 11

COLOR:

To be manufacturer's standard white with clear coat.

SPECIFICATION NO. 12

MANUALS:

One part's, repair, and operator manuals shall be supplied to Clark County at time of delivery of vehicles. One CD/DVD PC friendly parts and repair manual in lieu of the paper back books if available, shall be supplied to Clark County at time of delivery of vehicle.

SPECIFICATION NO. 13

KEYS:

Vehicle **must** be equipped with **Three** key fobs and three keys for all locks and they shall be provided at time of delivery to Clark County.

SPECIFICATION NO. 14

UTILITY BODY GENERAL DESCRIPTION:

Utility/Service body to be integrated with a new current production year Cutaway Van Chassis with an 80" cab to axle with dual rear wheels. The utility body should be a Knapheide Model#KUV129D20LK or equivalent.

DOOR LOCKS:

All doors shall be keyed the same and 4 sets of keys shall be supplied at the time of delivery.

REAR CARGO DOORS:

The rear cargo doors shall have tempered glass windows in each door.

INTERIOR DOME LIGHT:

The cargo area shall be illuminated by two overhead dome lights, switched at the rear of the van thus eliminating the need to climb into the interior to operate the lights.

UNDER COATING:

a. Entire body underside shall be fully under coated with an automotive grade undercoating.

PRIME PAINT:

a. All body components shall receive a 5-stage zinc phosphate pretreatment and baked on primer.

b. A second primer coating shall be applied after final body assembly for maximum corrosion resistance.

COLOR:

a. Body shall be painted inside and out with the OE paint color of cab & chassis that it will be installed on.

b. b. Clear coat shall be applied to the front and backside of all doors and the full exterior of the utility bed.

LADDER RACK:

a. Shall be equipped with an electrical roof mounted "Power Rack" on the curbside of the utility bed. The operational switch shall be located in the right rear load space.

REAR BUMPER:

a. Rear bumper shall be integral to the utility bed and provide a step up design to enter the bed area.

SPARE TIRE CARRIER:

a. A provision shall be made to allow the storage of the spare tire inside the utility bed.

SPECIFICATION NO. 15

WARRANTY:

Specify all factory, and component manufacturer's standard and extended warranties. Bidder shall list any extended warranties and costs associated with them that may be purchased by Clark County. (PLEASE NOTE: THE COST OF EXTENDED WARRANTIES IS NOT TO BE INCLUDED IN THE BID PRICE. CLARK COUNTY SHALL HAVE THE OPTION TO PURCHASE THE EXTENDED WARRANTIES SEPARATELY.)

BIDDERS MUST RETURN THE ORIGINAL OR A PHOTOCOPY OF THIS FORM AND MAKE AN ENTRY FOR EACH SPECIFICATION IN THE SPACE PROVIDED OPPOSITE THE SPECIFICATIONS, INDICATING ANY VARIANCES IN THE SPECIFICATION. IF THERE IS NOT ENOUGH SPACE, ATTACH AN ADDITIONAL SHEET OF PAPER.

ITEM NO. 3

CURRENT PRODUCTION MODEL 1 ½ -TON 4X4 DIESEL EXTENDED CAB & CHASSIS WITH DUAL REAR WHEELS WITH UTILTY BODY

SPECIFICATION NO. 1

GENERAL DESCRIPTION:

Vehicles to be manufacturer's conventional design full-sized diesel, 1 ½ ton Extended Cab & Chassis, 4X4, dual rear wheel with 60" cab to axle dimension and Utility body to match. Cab & Chassis to have a minimum GVW rating of 16,000-pounds. All components supplied shall be factory-installed and shall be as advertised in current published literature unless otherwise stated.

SPECIFICATION NO. 2

SUSPENSION/STEERING/BRAKES:

a. Steering: Power assist with heavy-duty steering stabilizer.

b. Brakes: Power assist with anti-lock on all four wheels.

c. Tires/Wheels: Six tubeless radial with an all-season rating available from manufacturer. All wheels must match. Size and ratings shall meet or exceed maximum allowable GVW imposed.

SPECIFICATION NO. 3

POWER TRAIN:

a. Engine: Largest diesel engine available from manufacturer, turbo-charged with fuel injection system and water separator type fuel filter.

b. Transmission: Automatic with factory installed transmission cooler and trailer towing package.

c. Transfer Case: Electronic Shift on the Fly with a protective skid plate.

d. Differentials: Shall be limited slip with a minimum ration of 4.30.

SPECIFICATION NO. 4

CHARGING/STARTING SYSTEM:

Maximum output and capacity alternator and battery available from vehicle manufacturer for model offered.

SPECIFICATION NO. 5

COOLING/AIR CONDITIONING:

a. Radiator: Maximum capacity and frontal area radiator available for vehicle model offered with coolant recovery system.

b. Air Conditioning: Factory-installed air conditioning with integral fresh air heater and defroster.

SPECIFICATION NO. 6

EXTERIOR:

a. Bumpers: Front manufacturer's standard.

b. Mirrors: Electronic controlled Left and Right outside with full extension capability for complete view along side of utility body, with small convex mirror integrated in housing. Factory standard size for vehicle model offered.

c. Moldings and Appearance Package: Standard for vehicle model offered.

d. Fuel Tank: Shall be the largest optional capacity fuel tank available from manufacturer for model offered.

e. Window Tint: Factory standard.

f. Rear cab mounted cargo light.

g. Running Boards for the length of the cab for ease of access to cab.

h. 4 Corner White Strobes mounted in the headlights and reverse light pods with a switch located on the dash to control them.

SPECIFICATION NO. 7

TRAILER TOWING PACKAGE:

Maximum capacity available for model offered. A heavy-duty frame mounted Class V weight distribution designed receiver hitch capable of accepting a 2-inch hitch with electronic auxiliary brake controller mounted in the cab. Two (2) Rings mounted on each side of receiver hitch. In addition, a 7-way RV Style light connector installed and wired to truck lighting system.

SPECIFICATION NO. 8

INTERIOR:

a. Seat: Front high-back bucket seats with center console and rear bench, cloth or vinyl with cloth inserts.
b. Trim: Vinyl or cloth door panels and armrests.
c. Floor Mats: Driver and passenger side.
d. Factory AM/FM/CD Player or latest technology, with Blue Tooth compatibility.
e. Factory installed cruise control.
f. Standard gauge package offered by manufacturer for model offered.
g. Additional dash mounted 12-volt source
h. Factory installed power windows and door locks.
i. Manufacturer Approved Reverse vehicle aid sensor. This will include an audible alarm in the cab that will sound when the rear of the vehicle get's close to an object and will increase in frequency the closer the vehicle gets to the object.

SPECIFICATION NO. 9

UNDERCOATING:

Standard for manufacturer with exception of drive train and fuel tank.

SPECIFICATION NO. 10

FUEL:

Vehicles shall be delivered with fuel tank full of fuel.

SPECIFICATION NO. 11

COLOR:

To be manufacturer's standard white with clear coat.

SPECIFICATION NO. 12

MANUALS:

One part's, repair, and one operator manuals shall be supplied to Clark County at time of delivery of vehicles. One CD/DVD PC friendly parts and repair manual in lieu of the paperback books if available, shall be supplied to Clark County at time of delivery of vehicle.

SPECIFICATION NO. 13

KEYS:

Vehicle **must** be equipped with Factory Installed (3) **Three** key fobs for keyless entry and three keys for all locks and they shall be provided at time of delivery to Clark County.

SERVICE BODY KEYS:

Shall be equipped with four (4) keys and all locks shall be keyed alike.

SPECIFICATION NO. 14

*****(SEE DRAWINGS, SPECIFICATION NO. 18)*****

UTILITY BODY GENERAL DESCRIPTION:

Utility/Service body to be mounted on a new current production year cab & chassis with a 60" cab to axle with dual rear wheels. Utility/Service Body to be a Warner Select II WS2A108-M-DW-U-FT Aluminum Service Body or Equivalent.

Shall Include the following:

a. Flip Top Compartments
b. Transverse Compartments between LV1 and RV 1
c. Body Shell Constructed of .125" thick 5052.
d. Doors constructed of .125" & .090 thickness 3003 aluminum. .125' thick outer panels and .090 inner panels.
e. Stamped Wheel Panel
f. Clip style shelf adjusting brackets
g. Adjustable shelving constructed of steel, 18-gauge G90-min spangle galvanized material 205lb capacity
h. Structural 6061 aluminum tubing understructure
i. .125" thick aluminum tread brite cargo floor
j. Flush mount doors
k. 12" High tailgate
l. LED Light Kit and LED Over 80" wide body marker light kit
m. Shall be powder coated white inside and outside
n. Entire underside of body shall be undercoated with asphalt based undercoating
o. Shall be equipped with mud flaps
p. Rear Grab Handles, 1 each side
q. Igloo 5 Gallon Water Cooler with mounting bracket installed as follows:
    1. Portable Plastic Water Cooler
    2. 14" Diameter X 20-1/2" high
    3. Yellow with red lid, includes lid keeper cord
    4. Storage rack with webbed strap with buckle
r. Mobile Vision BR-RVS5602 backup camera system installed as follows:
    1. 5.6" digital panel TFT LCD touch screen monitor
    2. Built-in speaker
    3. 18 LED Infrared camera
s. 15" Work bench Bumper as follows:
    1. 94"W X 15"D
    2. Full Width grip strut step
    3. 1/8" smooth steel side plates
    4. ¼" X 10 overlay with 2" clamping lip
t. Rear Bumper Storage Compartment installed as follows:
    1. 3/8" X 10 Steel Plate lid and end plates with 2" clamping lip.
    2. Locking Hinged Lid
    3. Expanded metal basket with rubber mat.
u. Vise Holder installed as follows:
    1. Shall be a 2"X2" tubing mounted on the right rear side of bumper
v. Two (2) each, grip strut step with rubber mounts mounted on either side of rear of service bed.

SPECIFICATION NO. 14 CONTINUED

w. C-Tech Extreme Duty Drawer Unit Installed as follows:

1. 36” 2250 slides for 3” drawers and 36” 3300 slides for 4” or taller drawers
2. Units Dim: (20w X 27.82h X 40d)
3. Drawers:
   - i. 3” Black Liner
   - ii. 3” Tray
   - iii. 3” Tray
   - iv. 4” 3 Row with Liner
   - v. 4” 2 Row with Liner
   - vi. 7” with Liner
   - vii. Slide Type: 2250 – 38” Bolt-On
   - viii. Bottom Space = 2.554
   - ix. Inside Drawer Dim: 15.53 W X 37.671 D
   - x. Telescoping Shelf
   - xi. Powder Coated Shelf

SPECIFICATION NO. 15

*****(SEE DRAWINGS, SPECIFICATION NO. 18)*****

LADDER RACK:

A custom ladder rack shall be built and installed per specifications below.

1. Overall dimensions are 248” L X 102” W
   - a. 2” square tubing X .25 wall thickness
   - b. (5) 6”uprights per side
   - c. (5) cross bars – rear 2 are removable
   - d. From the end of the back of the cab to the front on ladder rack the floor shall be covered with ¾” expanded metal
   - e. Powder coated white
2. Four (4) each ladder holders welded on each side
3. Steel Dispensing Cabinet, Wire, Hose and Tubing installed as follows:
   - a. Dimensions shall be width shall be entire width of rack and 12” height X 18” deep
   - b. 6 Dispensing holes
   - c. Powder coated white
   - d. Shall have a 4 each 5/8” diameter solid steel rod, removable through the center of the cabinet
   - e. Installed on ladder rack above transverse box (behind the cab) welded into place
4. Two (2) Weather Guard Aluminum conduit carrier hinged to open on top side and installed as follows:
   - a. 121.5”L X 11”W X 6”H installed on each side of the front of the rack

SPECIFICATION NO. 16

ADDITNONAL EQUIPMENT:

a. There shall be a 3000W Go Power Inverter installed in the left side mounted rear bin with a temperature controlled fan.

b. There shall be an 110V GFI Electrical outlet with weather proof cover located inside the cab of the truck and mounted to the rear left wall of the cab. This shall be wired to the 3000W Inverter.

SPECIFICATION NO. 17

WARRANTY:

Specify all factory, and component manufacturer’s standard and extended warranties. Bidder shall list any extended warranties and costs associated with them that may be purchased by Clark County. (PLEASE NOTE: THE COST OF EXTENDED WARRANTIES IS NOT TO BE INCLUDED IN THE BID PRICE. THE EXTENDED WARRANTY DESCRIPTION AND PRICE WILL BE LISTED SEPERATELY AS AN OPTION. CLARK COUNTY SHALL HAVE THE OPTION TO PURCHASE THE EXTENDED WARRANTIES SEPARATELY.)

SPECIFICATION NO. 18

DRAWINGS

right side view

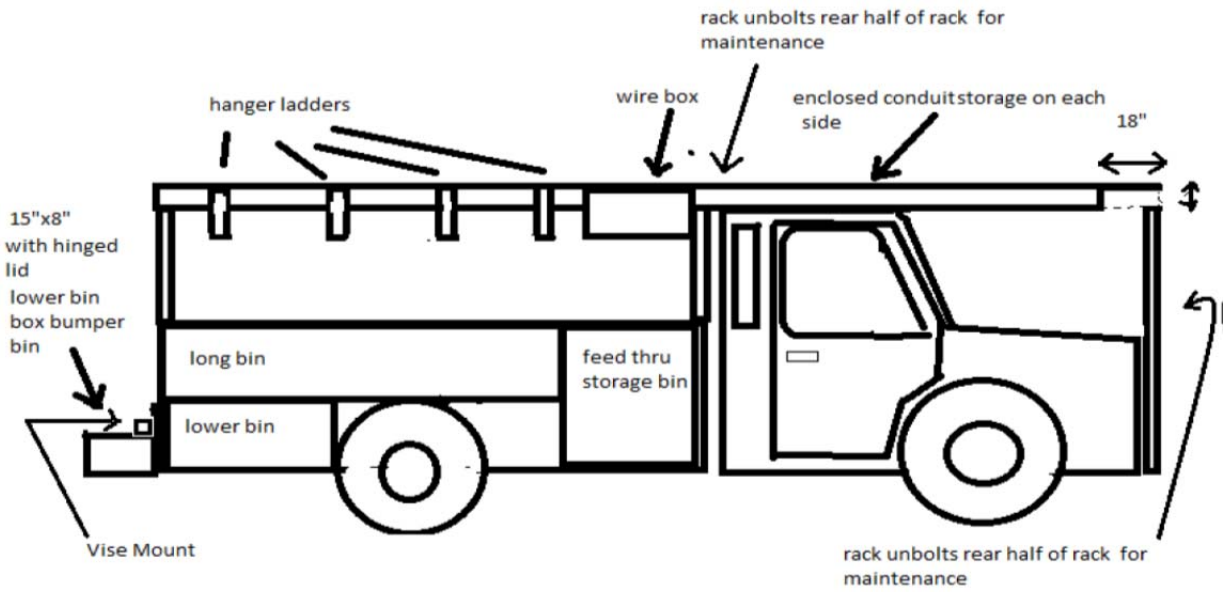

left side view

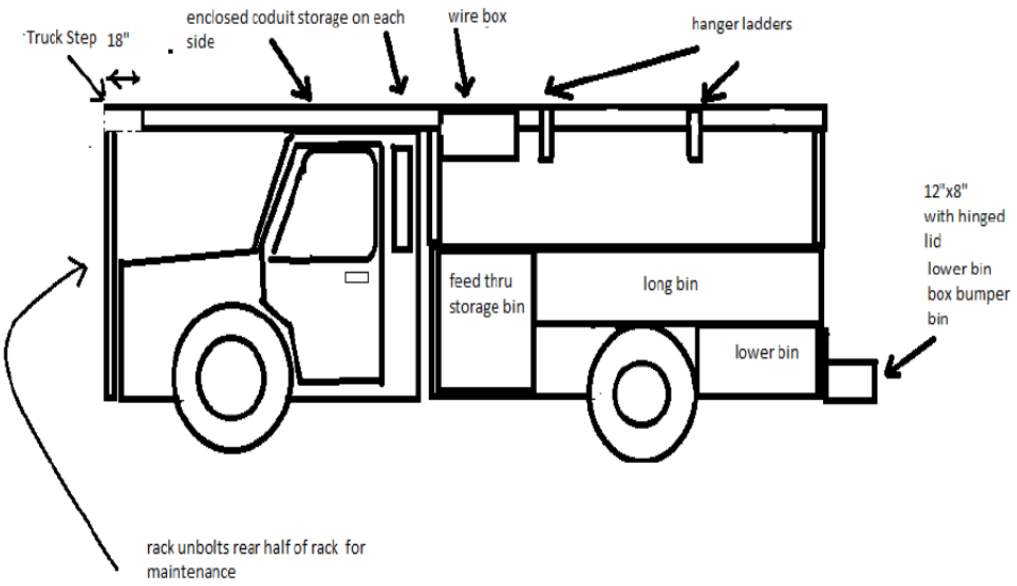

SPECIFICATION NO. 18

DRAWINGS CONTINUED

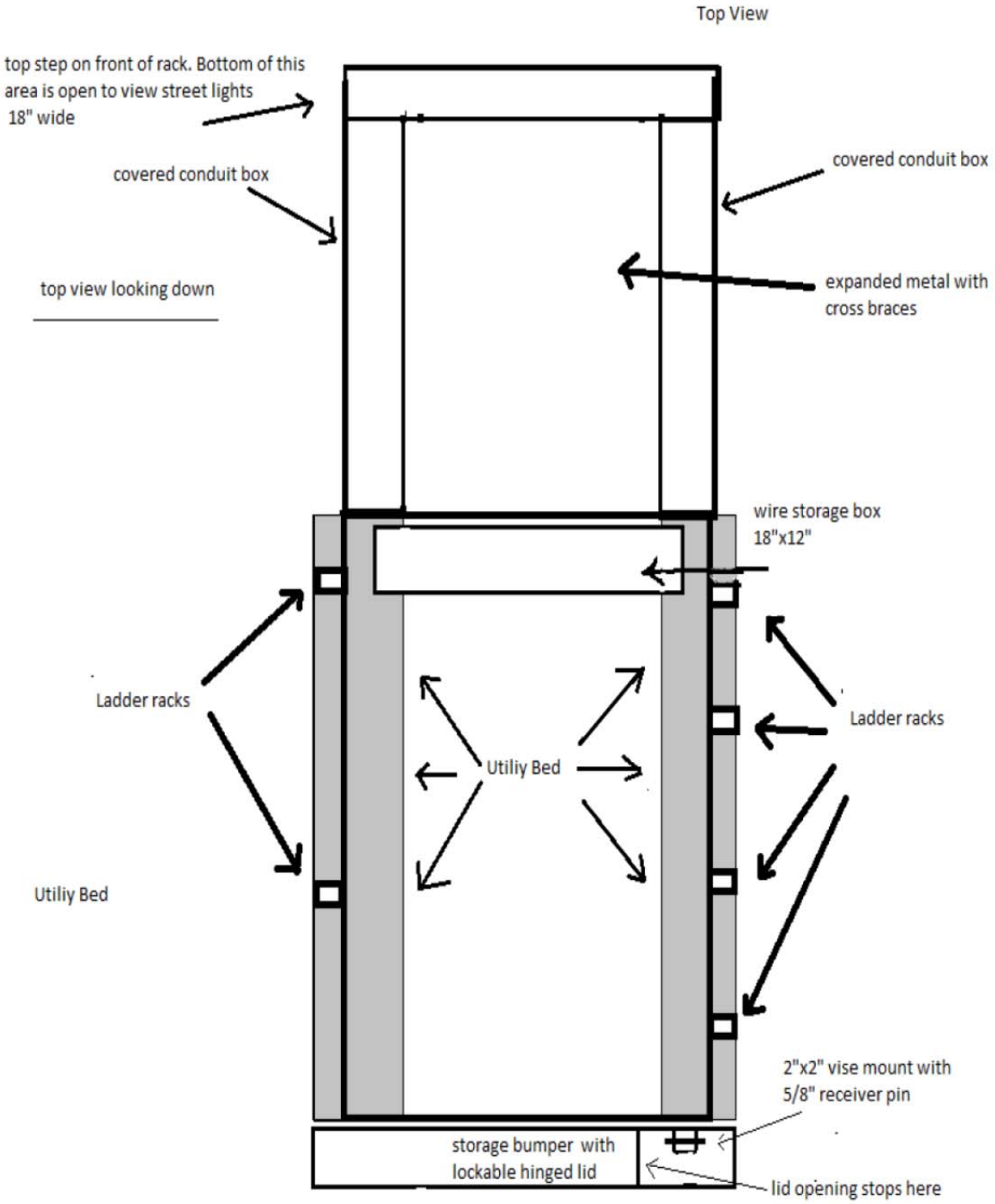

SPECIFICATION NO. 18

DRAWINGS CONTINUED

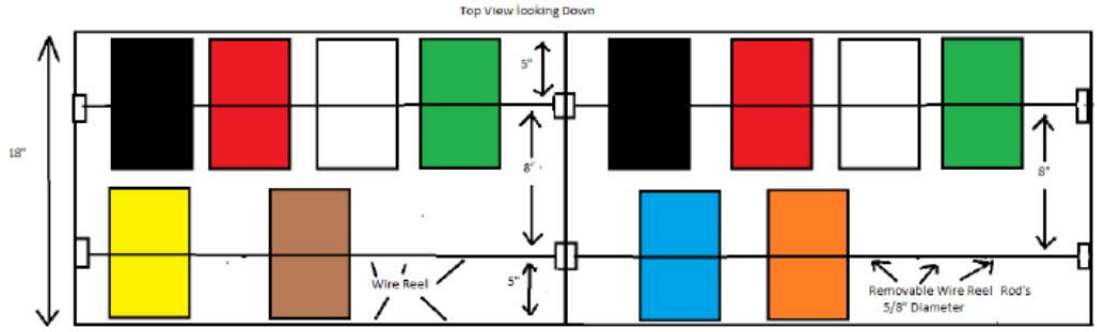

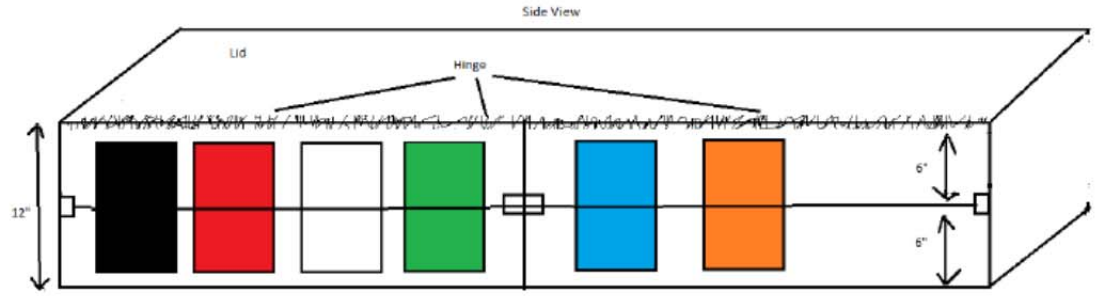

Mounted Behind the conduit storage boxes from driver side to passenger side

rear side view

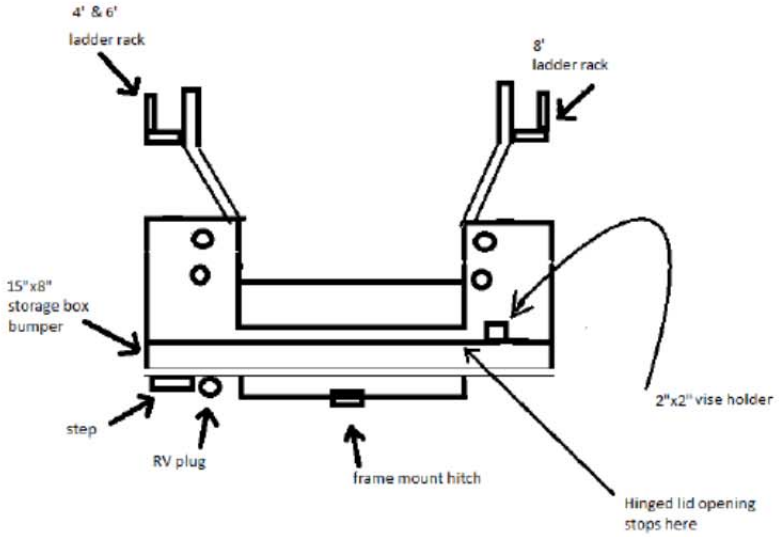

CLARK COUNTY, NEVADA

V - BID FORM

BID NO. 603858-15
VARIOUS CURRENT PRODUCTION MODEL UTILITY VEHICLES

_____
Name of Firm

This bid is submitted in response to COUNTY'S Invitation to Bid and is in accordance with all conditions and specifications in this document.

Item No.	Description	Quantity	Unit Price	Extended Total
1.	**Current Production Model 1-Ton 4x4 Cab & Chassis with Dual Rear Wheels with Utility Body with Towing Package** _____ (Model Year) (Manufacturer) (Make) Delivery _____Calendar Days (maximum 120 days)	3 Each	$_____	$_____
2.	**Current Production Model 1-Ton Diesel 4x2 Cutaway Van Chassis with Dual Rear Wheels Integrated Utility Body** _____ (Model Year) (Manufacturer) (Make) Delivery _____Calendar Days (maximum 120 days)	2 Each	$_____	$_____
3.	**Current Production Model 1 ½ -Ton 4x4 Diesel Extended Cab and Chassis with Dual Rear Wheels with Utility Body** _____ (Model Year) (Manufacturer) (Make) Delivery _____Calendar Days (maximum 120 days)	1 Each	$_____	$_____
			GRAND TOTAL	$_____

EXTENDED WARRANTY OPTIONS (IF ANY):

LAS VEGAS VALLEY FACTORY AUTHORIZED REPAIR FACILITY:

_____ _____ _____
(COMPANY NAME) (ADDRESS) (PHONE NUMBER)

Extended Warranty: _____ _____ _____
Type of Warranty Number of Years/Hours Cost

Extended Warranty: _____ _____ _____
Type of Warranty Number of Years/Hours Cost

OUT OF STATE DEALERS MUST PROVIDE LOCAL AUTHORIZED DEALER REPRESENTATIVE CONTACT INFORMATION TO WHOM ALL VEHICLES WILL BE DELIVERED:

_____ _____ _____
(COMPANY NAME – LOCAL AUTHORIZED DEALER) (ADDRESS) (PHONE NUMBER)

_____ _____
(CONTACT PERSON) (EMAIL ADDRESS)

DELIVERY:

_____ calendar days (Maximum 120 calendar days)

DISCOUNT TERMS OF PAYMENT:

_____%, _____ calendar days.

BIDDER'S LOCAL FACILITY
(If Bidder has multiple local facilities, please attach to bid submittal a list of this information for each facility)

_____
CONTACT MANAGER OR ACCOUNT REPRESENTATIVE NAME

_____
ADDRESS

_____
CITY STATE, ZIP

_____
PHONE NUMBER

_____
FAX NUMBER

_____
EMAIL ADDRESS

ATTACHMENTS TO BID FORM

FAILURE TO SUBMIT REQUIRED ATTACHMENTS AS LISTED BELOW MAY RESULT IN REJECTION OF BID.

1. **Attachment 1,** Subcontractor Information, is attached.

Bidder is responsible to ascertain the number of Addenda issued and hereby acknowledges receipt of the following Addendum: **FAILURE TO ACKNOWLEDGE ALL ADDENDA ISSUED AND USE THE CORRECT BID FORM AS REQUIRED, MAY RESULT IN REJECTION OF BID.**

Addendum No.	_____	Addendum No.	_____	Addendum No.	_____
Addendum No.	_____	Addendum No.	_____	Addendum No.	_____
Addendum No.	_____	Addendum No.	_____	Addendum No.	_____

Bidder hereby offers and agrees to furnish the material(s) and service(s) in compliance with all terms, conditions, specifications, and amendments in the Invitation to Bid and any written exceptions in the offer. We understand that the items in this Invitation to Bid, including, but not limited to, all required certificates are fully incorporated herein as a material and necessary part of the contract.

The undersigned hereby states, under penalty of perjury, that all information provided is true, accurate, and complete, and states that he/she has the authority to submit this bid, which will result in a binding contract if accepted by Clark County, Nevada.

I certify, under penalty of perjury, that I have the legal authorization to bind the firm hereunder:

SIGNATURE OF AUTHORIZED REPRESENTATIVE	LEGAL NAME OF FIRM
NAME AND TITLE OF AUTHORIZED REPRESENTATIVE (PRINT OR TYPE)	ADDRESS OF FIRM
PHONE NUMBER OF AUTHORIZED REPRESENTATIVE	CITY, STATE ZIP
FAX NUMBER OF AUTHORIZED REPRESENTATIVE	
EMAIL ADDRESS	DATE

BUSINESS LICENSE INFORMATION:

CURRENT STATE	**LICENSE NO.**	**ISSUE DATE:**	**EXPIRATION DATE:**
CURRENT COUNTY:	**LICENSE NO.**	**ISSUE DATE:**	**EXPIRATION DATE:**
CURRENT CITY:	**LICENSE NO.**	**ISSUE DATE:**	**EXPIRATION DATE:**

FOR INFORMATIONAL PURPOSES ONLY:

The above referenced firm is a ☐ MBE ☐ WBE ☐ PBE ☐ SBE ☐ VET ☐ DVET ☐ ESB as defined below.

STATE OF NEVADA BUSINESSES

MINORITY OWNED BUSINESS ENTERPRISE (MBE):

An independent and continuing Nevada business for profit which performs a commercially useful function and is at least 51% owned and controlled by one or more minority persons of Black American, Hispanic American, Asian-Pacific American or Native American ethnicity.

WOMEN OWNED BUSINESS ENTERPRISE (WBE):

An independent and continuing Nevada business for profit which performs a commercially useful function and is at least 51% owned and controlled by one or more women.

PHYSICALLY-CHALLENGED BUSINESS ENTERPRISE (PBE):

An independent and continuing Nevada business for profit which performs a commercially useful function and is at least 51% owned and controlled by one or more disabled individuals pursuant to the federal Americans with Disabilities Act.

SMALL BUSINESS ENTERPRISE (SBE):

An independent and continuing Nevada business for profit which performs a commercially useful function, is not owned and controlled by individuals designated as minority, women, or physically-challenged, and where gross annual sales does not exceed $2,000,000.

VETERAN OWNED BUSINESS ENTERPRISE (VET):

An independent and continuing Nevada business for profit which performs a commercially useful function and is at least 51 percent owned and controlled by one or more U.S. Veterans.

DISABLED VETERAN OWNED BUSINESS ENTERPRISE (DVET):

A Nevada business at least 51 percent owned/controlled by a disabled veteran.

EMERGING SMALL BUSINESS (ESB):

Certified by the Nevada Governor's Office of Economic Development effective January, 2014. Approved into Nevada law during the 77th Legislative session as a result of AB294.

ATTACHMENT 1
BID NO. 603858-15
VARIOUS CURRENT PRODUCTION MODEL UTILITY VEHICLES

SUBCONTRACTOR INFORMATION

It is our intent to utilize the following MBE, WBE, PBE, SBE, VET, DVET and ESB subcontractors in association with CONTRACT:

Subcontractor Name: _____
Contact Person: _____ Telephone Number: _____
Description of Work: _____
Estimated Percentage of Total Dollars: _____
Business Type: ☐ MBE ☐ WBE ☐ PBE ☐ SBE ☐ VET
☐ DVET ☐ ESB

Subcontractor Name: _____
Contact Person: _____ Telephone Number: _____
Description of Work: _____
Estimated Percentage of Total Dollars: _____
Business Type: ☐ MBE ☐ WBE ☐ PBE ☐ SBE ☐ VET
☐ DVET ☐ ESB

Subcontractor Name: _____
Contact Person: _____ Telephone Number: _____
Description of Work: _____
Estimated Percentage of Total Dollars: _____
Business Type: ☐ MBE ☐ WBE ☐ PBE ☐ SBE ☐ VET
☐ DVET ☐ ESB

Subcontractor Name: _____
Contact Person: _____ Telephone Number: _____
Description of Work: _____
Estimated Percentage of Total Dollars: _____
Business Type: ☐ MBE ☐ WBE ☐ PBE ☐ SBE ☐ VET
☐ DVET ☐ ESB

Subcontractor Name: _____
Contact Person: _____ Telephone Number: _____
Description of Work: _____
Estimated Percentage of Total Dollars: _____
Business Type: ☐ MBE ☐ WBE ☐ PBE ☐ SBE ☐ VET
☐ DVET ☐ ESB

Subcontractor Name: _____
Contact Person: _____ Telephone Number: _____
Description of Work: _____
Estimated Percentage of Total Dollars: _____
Business Type: ☐ MBE ☐ WBE ☐ PBE ☐ SBE ☐ VET
☐ DVET ☐ ESB

☐ No MBE, WBE, PBE, SBE, VET, DVET or ESB subcontractors will be used.

EXHIBIT A

BID NO. 603858-15
VARIOUS CURRENT PRODUCTION MODEL UTILITY VEHICLES

DEVIATIONS TO TECHNICAL SPECIFICATIONS

Any deviation taken at the time of or after bid submittal may render the bid non-responsive. If a Bidder is unable to meet the Technical Specifications, Bidder MUST complete the attached **Exhibit A** and submit it to the Purchasing Analyst at least five (5) business days prior to the scheduled **PRE-BID CONFERENCE**. It shall be the sole responsibility of the Bidder to ensure that the Purchasing Analyst has been properly notified, **PRIOR TO THE PRE-BID CONFERENCE** of the Bidder's deviation to the Technical Specifications.

Specification	Remarks
1- j	***Fuel tank size 115 gallons*** **(example of deviation to specifications)**
_____	_____
_____	_____
_____	_____
_____	_____
_____	_____
_____	_____
_____	_____
_____	_____
_____	_____
_____	_____
_____	_____
_____	_____
_____	_____

Name of Firm _____ Date _____

Signature _____ Print Name _____

INSTRUCTIONS FOR COMPLETING THE
DISCLOSURE OF OWNERSHIP/PRINCIPALS FORM

Purpose of the Form

The purpose of the Disclosure of Ownership/Principals Form is to gather ownership information pertaining to the business entity for use by the Board of County Commissioners ("BCC") in determining whether members of the BCC should exclude themselves from voting on agenda items where they have, or may be perceived as having a conflict of interest, and to determine compliance with Nevada Revised Statute 281A.430, contracts in which a public officer or employee has interest is prohibited.

General Instructions

Completion and submission of this Form is a condition of approval or renewal of a contract or lease and/or release of monetary funding between the disclosing entity and the appropriate Clark County government entity. Failure to submit the requested information may result in a refusal by the BCC to enter into an agreement/contract and/or release monetary funding to such disclosing entity.

Detailed Instructions

All sections of the Disclosure of Ownership form must be completed. If not applicable, write in N/A.

Business Entity Type – Indicate if the entity is an Individual, Partnership, Limited Liability Company, Corporation, Trust, Non-profit Organization, or Other. When selecting 'Other', provide a description of the legal entity.

Non-Profit Organization (NPO) - Any non-profit corporation, group, association, or corporation duly filed and registered as required by state law.

Business Designation Group – Indicate if the entity is a Minority Owned Business Enterprise (MBE), Women-Owned Business Enterprise (WBE), Small Business Enterprise (SBE), Physically-Challenged Business Enterprise (PBE), Veteran Owned Business (VET), Disabled Veteran Owned Business (DVET), or Emerging Small Business (ESB) . This is needed in order to provide utilization statistics to the Legislative Council Bureau, and will be used only for such purpose.

- **Minority Owned Business Enterprise (MBE):** An independent and continuing business for profit which performs a commercially useful function and is at least 51% owned and controlled by one or more minority persons of Black American, Hispanic American, Asian-Pacific American or Native American ethnicity.
- **Women Owned Business Enterprise (WBE**): An independent and continuing business for profit which performs a commercially useful function and is at least 51% owned and controlled by one or more women.
- **Physically-Challenged Business Enterprise (PBE):** An independent and continuing business for profit which performs a commercially useful function and is at least 51% owned and controlled by one or more disabled individuals pursuant to the federal Americans with Disabilities Act.
- **Small Business Enterprise (SBE):** An independent and continuing business for profit which performs a commercially useful function, is not owned and controlled by individuals designated as minority, women, or physically-challenged, and where gross annual sales does not exceed $2,000,000.
- **Veteran Owned Business Enterprise (VET):** An independent and continuing Nevada business for profit which performs a commercially useful function and is at least 51 percent owned and controlled by one or more U.S. Veterans.
- **Disabled Veteran Owned Business Enterprise (DVET):** A Nevada business at least 51 percent owned/controlled by a disabled veteran.
- **Emerging Small Business (ESB):** Certified by the Nevada Governor's Office of Economic Development effective January, 2014. Approved into Nevada law during the 77th Legislative session as a result of AB294.

Business Name (include d.b.a., if applicable) – Enter the legal name of the business entity and enter the "Doing Business As" (d.b.a.) name, if applicable.

Corporate/Business Address, Business Telephone, Business Fax, and Email – Enter the street address, telephone and fax numbers, and email of the named business entity.

Nevada Local Business Address, Local Business Telephone, Local Business Fax, and Email – If business entity is out-of-state, but operates the business from a location in Nevada, enter the Nevada street address, telephone and fax numbers, point of contact and email of the local office. Please note that the local address must be an address from which the business is operating from that location. Please do not include a P.O. Box number, unless required by the U.S. Postal Service, or a business license hanging address.

Number of Clark County Nevada Residents employed by this firm. (**Do not leave blank. If none or zero, put the number 0 in the space provided.)**

List of Owners/Officers – Include the full name, title and percentage of ownership of each person who has ownership or financial interest in the business entity. If the business is a publicly-traded corporation or non-profit organization, list all Corporate Officers and Directors only.

For All Contracts – **(Not required for publicly-traded corporations)**

1) Indicate if any individual members, partners, owners or principals involved in the business entity are a Clark County full-time employee(s), or appointed/elected official(s). If yes, the following paragraph applies.

   In accordance with NRS 281A.430.1, a public officer or employee shall not bid on or enter into a contract between a government agency and any private business in which he has a significant financial interest, except as provided for in subsections 2, 3, and 4.

2) Indicate if any individual members, partners, owners or principals involved in the business entity have a second degree of consanguinity or affinity relation to a Clark County full-time employee(s), or appointed/elected official(s) (reference form on Page 2 for definition). If **YES**, complete the Disclosure of Relationship Form. Clark County is comprised of the following government entities: Clark County, Department of Aviation (McCarran Airport), and Clark County Water Reclamation District. Note: The Department of Aviation includes all of the General Aviation Airports (Henderson, North Las Vegas, and Jean). **This will also include Clark County Detention Center.**

A professional service is defined as a business entity that offers business/financial consulting, legal, physician, architect, engineer or other professional services.

Signature and Print Name – Requires signature of an authorized representative and the date signed.

Disclosure of Relationship Form – If any individual members, partners, owners or principals of the business entity is presently a Clark County employee, public officer or official, or has a second degree of consanguinity or affinity relationship to a Clark County employee, public officer or official, this section must be completed in its entirety.

DISCLOSURE OF OWNERSHIP/PRINCIPALS

Business Entity Type (Please select one)						
☐ Sole Proprietorship	☐Partnership	☐ Limited Liability Company	☐ Corporation	☐ Trust	☐ Non-Profit Organization	☐ Other

Business Designation Group (Please select all that apply)						
☐ MBE	☐ WBE	☐ SBE	☐ PBE	☐ VET	☐DVET	☐ ESB
Minority Business Enterprise	Women-Owned Business Enterprise	Small Business Enterprise	Physically Challenged Business Enterprise	Veteran Owned Business	Disabled Veteran Owned Business	Emerging Small Business

Number of Clark County Nevada Residents Employed:

Corporate/Business Entity Name:		
(Include d.b.a., if applicable)		
Street Address:		**Website:**
City, State and Zip Code:		**POC Name:** **Email:**
Telephone No:		**Fax No:**
Nevada Local Street Address: **(If different from above)**		**Website:**
City, State and Zip Code:		**Local Fax No:**
Local Telephone No:		**Local POC Name:** **Email:**

All entities, with the exception of publicly-traded and non-profit organizations**,** must list the names of individuals holding more than five percent (5%) ownership or financial interest in the business entity appearing before the Board.

Publicly-traded entities and non-profit organizations shall list all Corporate Officers and Directors in lieu of disclosing the names of individuals with ownership or financial interest. The disclosure requirement, as applied to land-use applications, extends to the applicant and the landowner(s).

Entities include all business associations organized under or governed by Title 7 of the Nevada Revised Statutes, including but not limited to private corporations, close corporations, foreign corporations, limited liability companies, partnerships, limited partnerships, and professional corporations.

Full Name	Title	% Owned (Not required for Publicly Traded Corporations/Non-profit organizations)

This section is not required for publicly-traded corporations. Are you a publicly-traded corporation? ☐ Yes ☐ No

1. Are any individual members, partners, owners or principals, involved in the business entity, a Clark County, Department of Aviation, Clark County Detention Center or Clark County Water Reclamation District full-time employee(s), or appointed/elected official(s)?

   ☐ Yes ☐ No (If yes, please note that County employee(s), or appointed/elected official(s) may not perform any work on professional service contracts, or other contracts, which are not subject to competitive bid.)

2. Do any individual members, partners, owners or principals have a spouse, registered domestic partner, child, parent, in-law or brother/sister, half-brother/half-sister, grandchild, grandparent, related to a Clark County, Department of Aviation, Clark County Detention Center or Clark County Water Reclamation District full-time employee(s), or appointed/elected official(s)?

   ☐ Yes ☐ No (If yes, please complete the Disclosure of Relationship form on Page 2. If no, please print N/A on Page 2.)

I certify under penalty of perjury, that all of the information provided herein is current, complete, and accurate. I also understand that the Board will not take action on land-use approvals, contract approvals, land sales, leases or exchanges without the completed disclosure form.

Signature _____ Print Name _____

Title _____ Date _____

DISCLOSURE OF RELATIONSHIP

List any disclosures below:
(Mark N/A, if not applicable.)

NAME OF BUSINESS OWNER/PRINCIPAL	NAME OF COUNTY* EMPLOYEE/OFFICIAL AND JOB TITLE	RELATIONSHIP TO COUNTY* EMPLOYEE/OFFICIAL	COUNTY* EMPLOYEE'S/OFFICIAL'S DEPARTMENT

* County employee means Clark County, Department of Aviation, Clark County Detention Center or Clark County Water Reclamation District.

"Consanguinity" is a relationship by blood. "Affinity" is a relationship by marriage.

"To the second degree of consanguinity" applies to the candidate's first and second degree of blood relatives as follows:

- Spouse – Registered Domestic Partners – Children – Parents – In-laws (first degree)
- Brothers/Sisters – Half-Brothers/Half-Sisters – Grandchildren – Grandparents – In-laws (second degree)

For County Use Only:

If any Disclosure of Relationship is noted above, please complete the following:

☐ Yes ☐ No Is the County employee(s) noted above involved in the contracting/selection process for this particular agenda item?

☐ Yes ☐ No Is the County employee(s) noted above involved in any way with the business in performance of the contract?

Notes/Comments:

_____
Signature

_____
Print Name
Authorized Department Representative