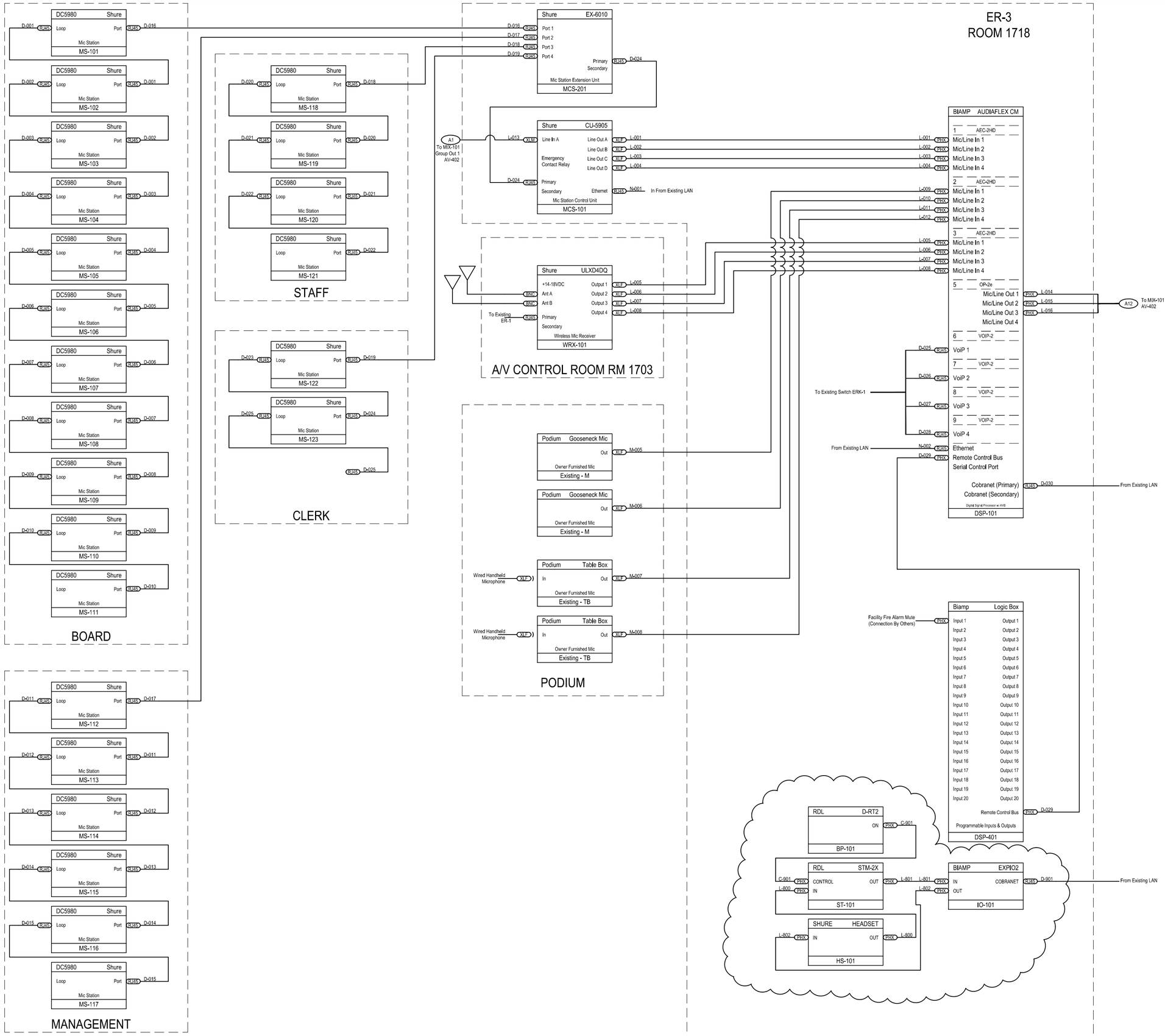

1 AUDIO PRESENTATION SYSTEM PART 1

SCALE: N.T.S.

CLARK COUNTY GOVERNMENT CENTER

500 S. Grand Central Parkway
Las Vegas, NV 89155
Phone: 702.455.6731

1ST FLOOR COMMISSION CHAMBERS

AUDIO SYSTEM REPLACEMENT

AUDIO VIDEO DESIGN BUILD GROUP LC
6672 Spencer Street Suite 100
Las Vegas, Nv 89119
www.avdb-group.com
Office: 702-586-4400
Fax: 702-586-4404

REVISION #	DATE
Design Submittal	10.25.2013
Asbuilt	11.15.2013
Revised Asbuilt AV-401 only	07.16.2014

PROJECT NO: 1309CCN
DESIGNED BY: MBC
ENGINEERED BY: RFC

SHEET TITLE: Audio Presentation System Part 1

SHEET NUMBER: AV-401

ALL IDEAS, DESIGNS AND IMPLIED INTENT REPRESENTED BY THESE DRAWINGS ARE EXCLUSIVELY OWNED BY AVDB GROUP LC. THESE DRAWINGS CONSTITUTE INTELLECTUAL PROPERTY OF AVDB GROUP LC. THEY SHALL NOT BE COPIED IN WHOLE OR IN PART, DUPLICATED OR DISTRIBUTED IN ANY WAY WITHOUT THE EXPRESS WRITTEN PERMISSION OF AVDB GROUP LC.

ALL IDEAS, DESIGNS AND IMPLIED INTENT REPRESENTED BY THESE DRAWINGS ARE EXCLUSIVELY OWNED BY AVDB GROUP LLC. THESE DRAWINGS CONSTITUTE INTELLECTUAL PROPERTY OF AVDB GROUP. THEY SHALL NOT BE COPIED IN WHOLE OR IN PART, DUPLICATED OR DISTRIBUTED IN ANY WAY WITHOUT THE EXPRESS WRITTEN PERMISSION OF AVDB GROUP.

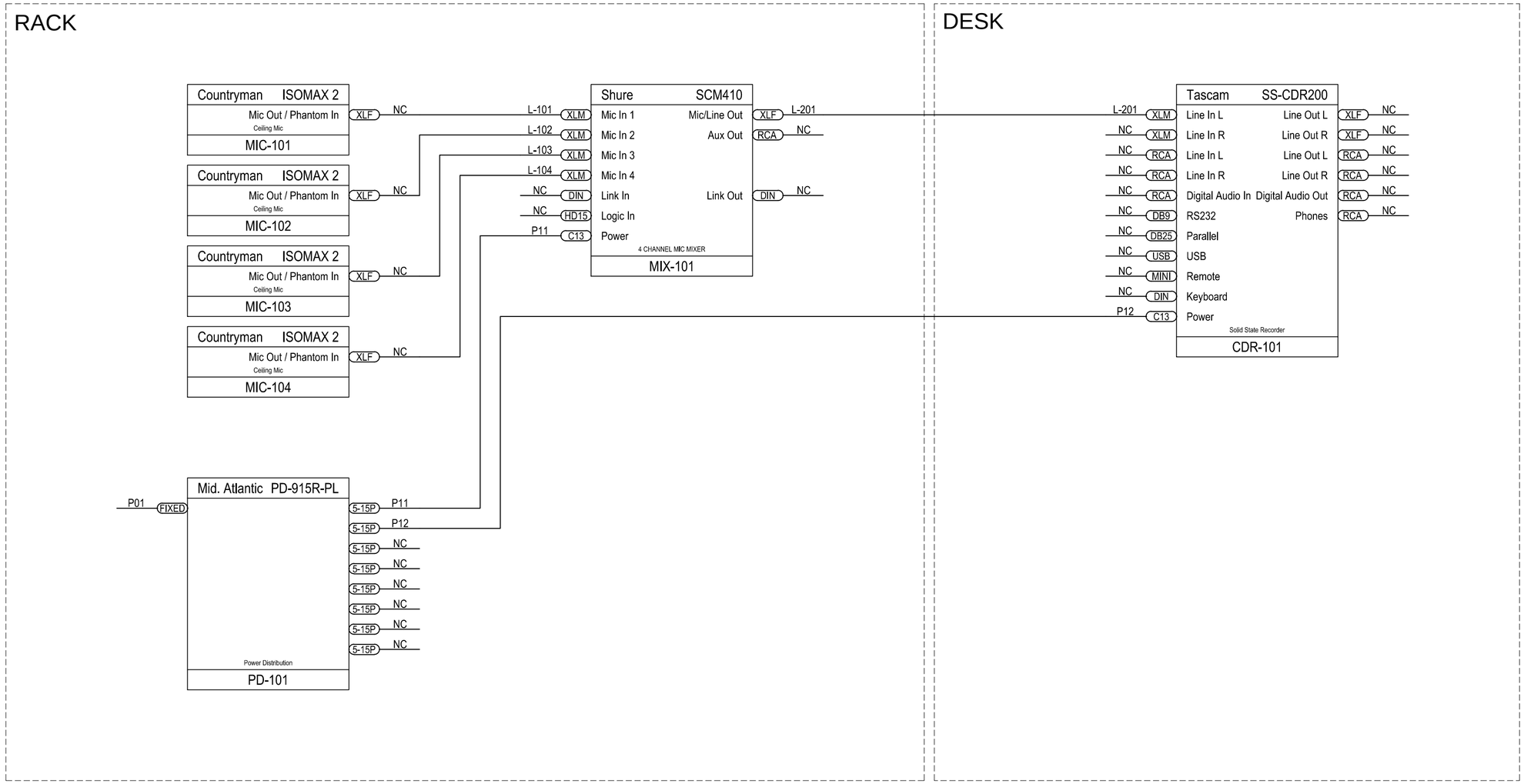

Clark County Nevada

500 S. Grand Central Pkwy
Las Vegas, NV 89155
Phone: 702-455-3030

Chambers

Conference Recording System

AUDIO VIDEO DESIGN BUILD GROUP
2470 N Decatur Blvd
Suite 170
Las Vegas, NV 89108
www.avdb-group.com
Office: 702.586.4400
Fax: 702.586.4404

REVISION #	DATE
AS BUILT	07-15-2014

PROJECT NO: XXXX
DESIGNED BY: MBC
ENGINEERED BY: JS

SHEET TITLE:
Line Drawing

SHEET NUMBER:
TA-401

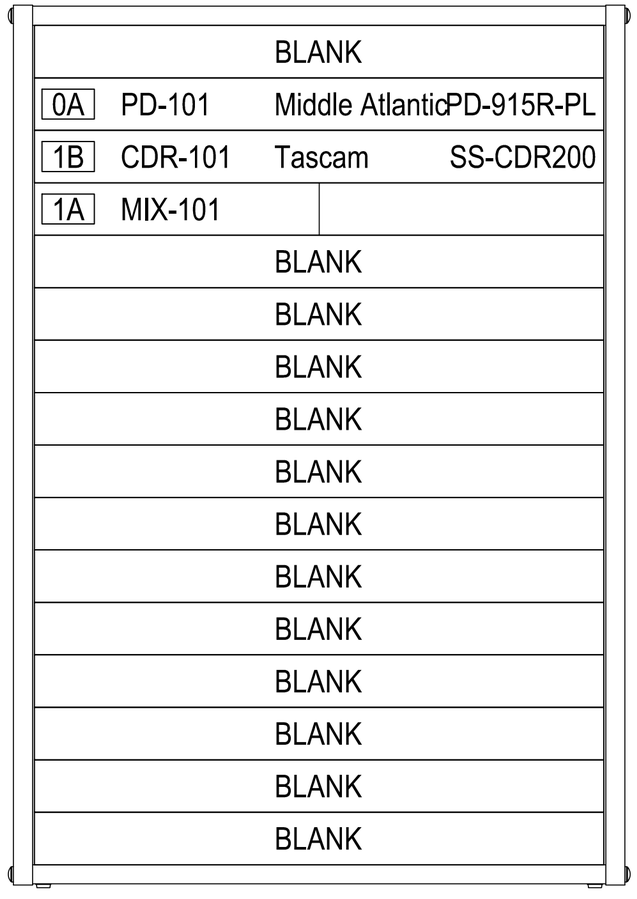

Clark County Nevada

500 S. Grand Central Pkwy
Las Vegas, NV 89155
Phone: 702-455-3030

Chambers

Conference Recording System

AUDIO VIDEO DESIGN BUILD GROUP
2470 N Decatur Blvd
Suite 170
Las Vegas, NV 89108
www.avdb-group.com
Office: 702.586.4400
Fax: 702.586.4404

REVISION #	DATE
AS BUILT	07-15-2014

PROJECT NO: XXXX
DESIGNED BY: MBC
ENGINEERED BY: JS

SHEET TITLE:
Rack Elevation

SHEET NUMBER:
TA-501

-ALL IDEAS, DESIGNS AND IMPLIED INTENT REPRESENTED BY THESE DRAWINGS ARE EXCLUSIVELY OWNED BY AVDB GROUP P.C. THESE DRAWINGS CONSTITUTE INTELLECTUAL PROPERTY OF AVDB GROUP. THEY SHALL NOT BE COPIED IN WHOLE OR IN PART, DUPLICATED OR DISTRIBUTED IN ANY WAY WITHOUT THE EXPRESS WRITTEN PERMISSION OF AVDB GROUP-