OPTIONAL DUCT SMOKE DETECTOR INSTALLATION

OPTIONAL METHOD FOR DUCT SMOKE DETECTOR INSTALLED TO PROVIDE WEATHER PROTECTION AND ACCESS TO SMOKE DETECTOR FOR PURPOSES OF SHUTOFF OF AIR MOVING SYSTEM FOR COMPLIANCE UMC CHAPTER 6. SMOKE DETECTOR MUST BE INSTALLED IN ACCORDANCE WITH ITS LISTING AND IN THE MAIN SUPPLY AIR DUCT.

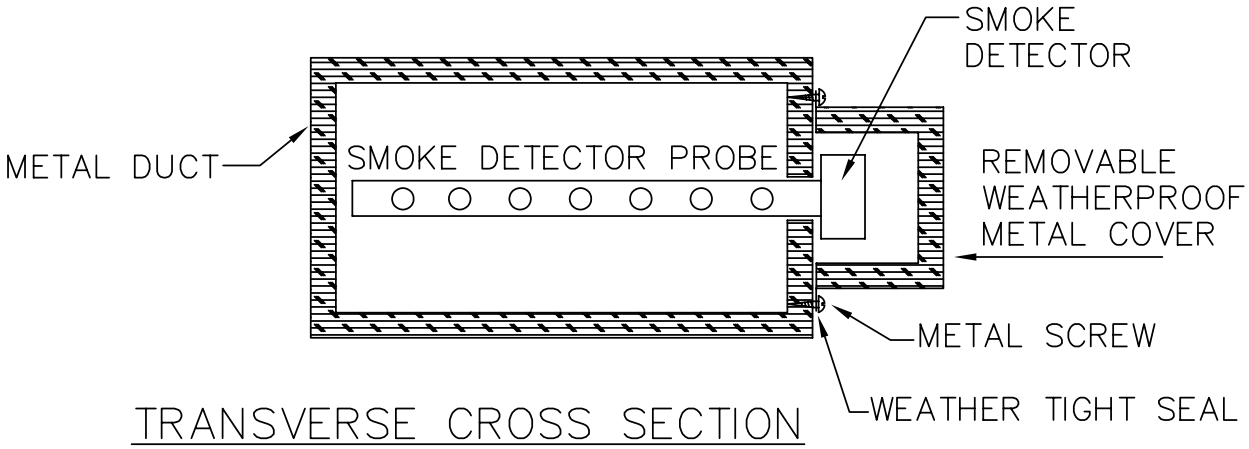

TRANSVERSE CROSS SECTION

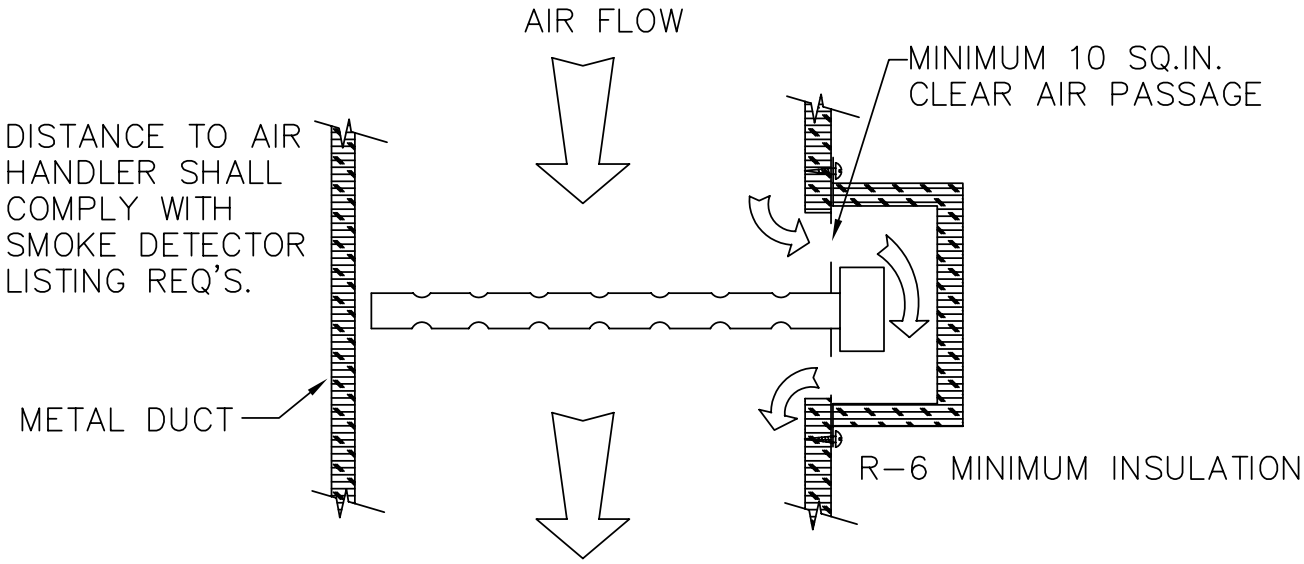

LONGITUDINAL SECTION