| SOUTHERN NEVADA BUILDING OFFICIALS<br>REGIONAL STANDARDS | B-120-4<br>11-02-05<br>Pg. 1 of 1 |
|---|---|

## TOWNHOUSE-TWO ONE HOUR WALLS

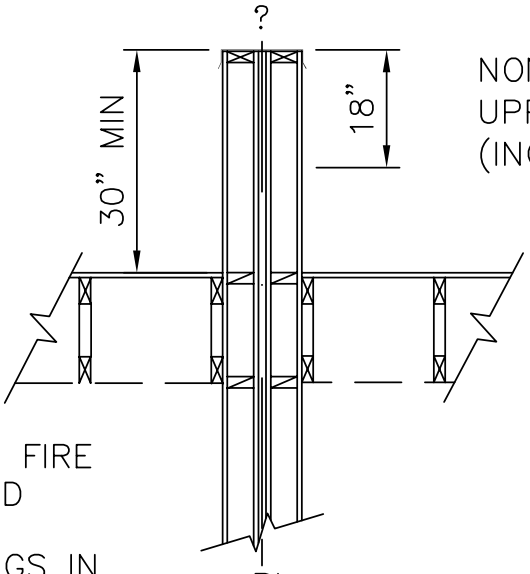


NON–COMBUSTIBLE FACING UPPER 18" MIN.–BOTH SIDES (INCLUDING COPING)

PARALLEL FRAMING

NO ROOF OR CEILING FIRE PROTECTION REQUIRED

LOCATION OF OPENINGS IN THE ROOF PER THE PLUMBING AND MECHANICAL CODES

TRUSSES JOISTS OR RAFTERS SHALL NOT FRAME THROUGH THE WALL

FLOOR CEILING STC & IIC OF 50 OR BETTER

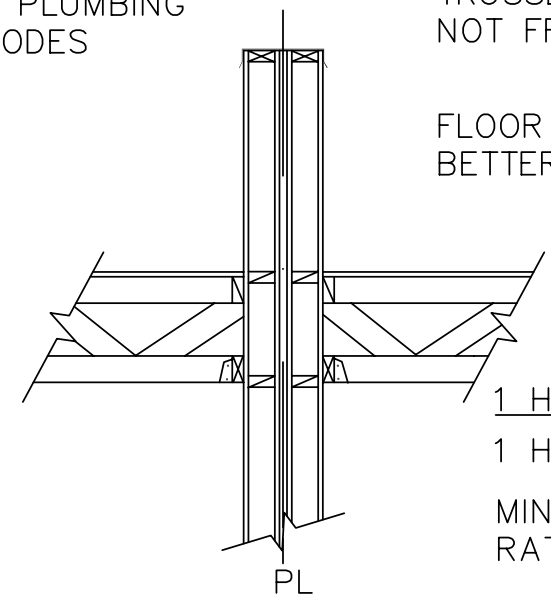


PERPENDICULAR FRAMING

1 HOUR WALL CONSTRUCTION

1 HOUR LISTED ASSEMBLY

MINIMUM STC 50 SOUND RATING

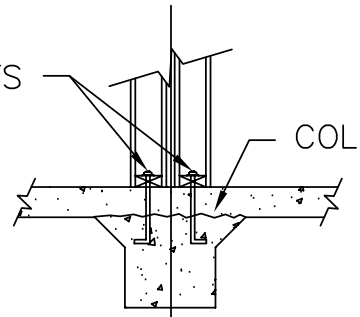

ANCHOR BOLTS PER PLAN

COLD JOINT OPTIONAL

FOR OPTIONAL 2 HOUR PARTY WALL SEE IRC SECTION R321.2.2, EXCEPTION

| Clark County | Boulder City | Henderson | Las Vegas | Mesquite | North Las Vegas |
|---|---|---|---|---|---|
| Dept. of Develop. Services<br>4701 W Russell Rd<br>Las Vegas NV 89118<br>(702) 455-3000 | Building Department<br>401 California Avenue<br>Boulder City, NV 89005<br>(702) 293-9282 | Bldg & Fire Safety Dept.<br>240 Water St.<br>Henderson, NV 89015<br>(702) 267-3650 | Building & Safety Dept.<br>731 S. 4th Street<br>Las Vegas, NV 89101<br>(702) 229-6916 | Building Department<br>10 East Mesquite Blvd.<br>Mesquite NV. 89027<br>(702) 346-2835 | Building Department<br>2266 Civic Center Drive<br>N. Las Vegas, NV 89030<br>(702) 633-1577 |