Clark County
Department of Building
500 S. Grand Central Pky.
Las Vegas, Nevada 89115-3530
(702) 455-3000

FREE STANDING CARPORTS - LOCATION ON PROPERTY

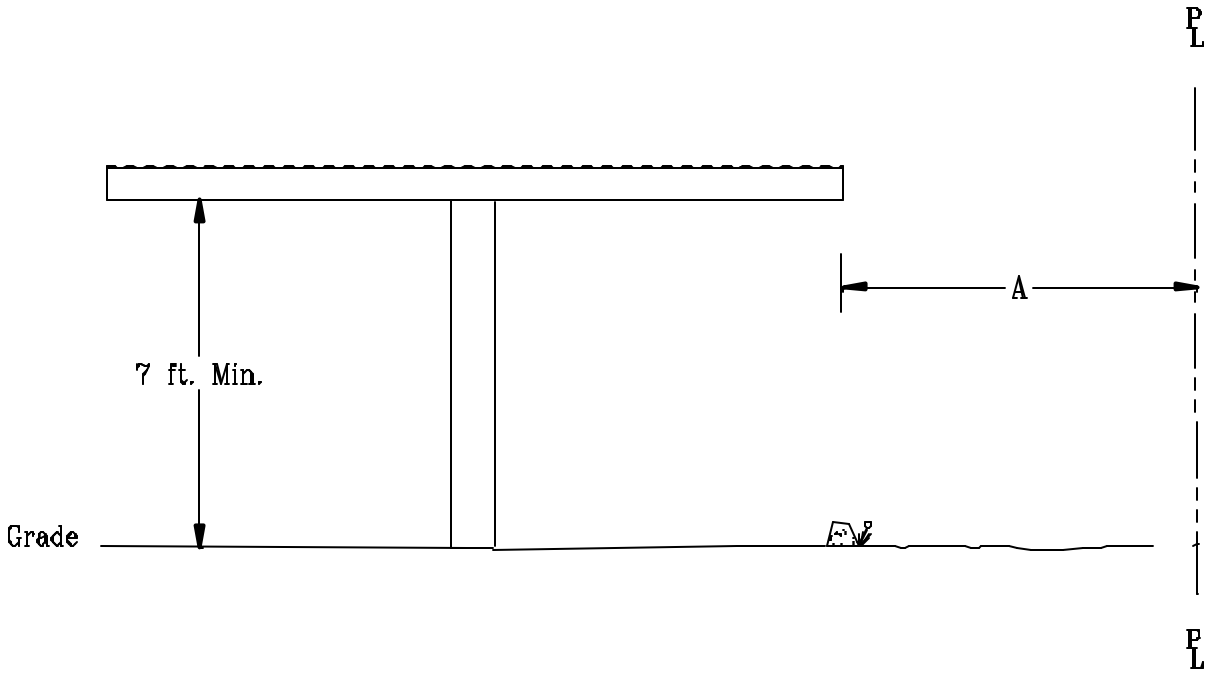

OCCUPANCY	U-1	U-1	S-3
AREA sq. ft.	0 to 1000	1001 to 3000	3001or More
DIMENSION A	2 ft. Min.	4 ft.Min.	6ft 8in. Min

The property line is either the actual recorded or is an assumed property line between buildings on the same property as allowed by code.

Setbacks from an assumed property line shall be as required by UBC 503.3 .

Mesquite
Building Department
10 East Mesquite Blvd.
Mesquite NV. 89027
(702) 346-2835