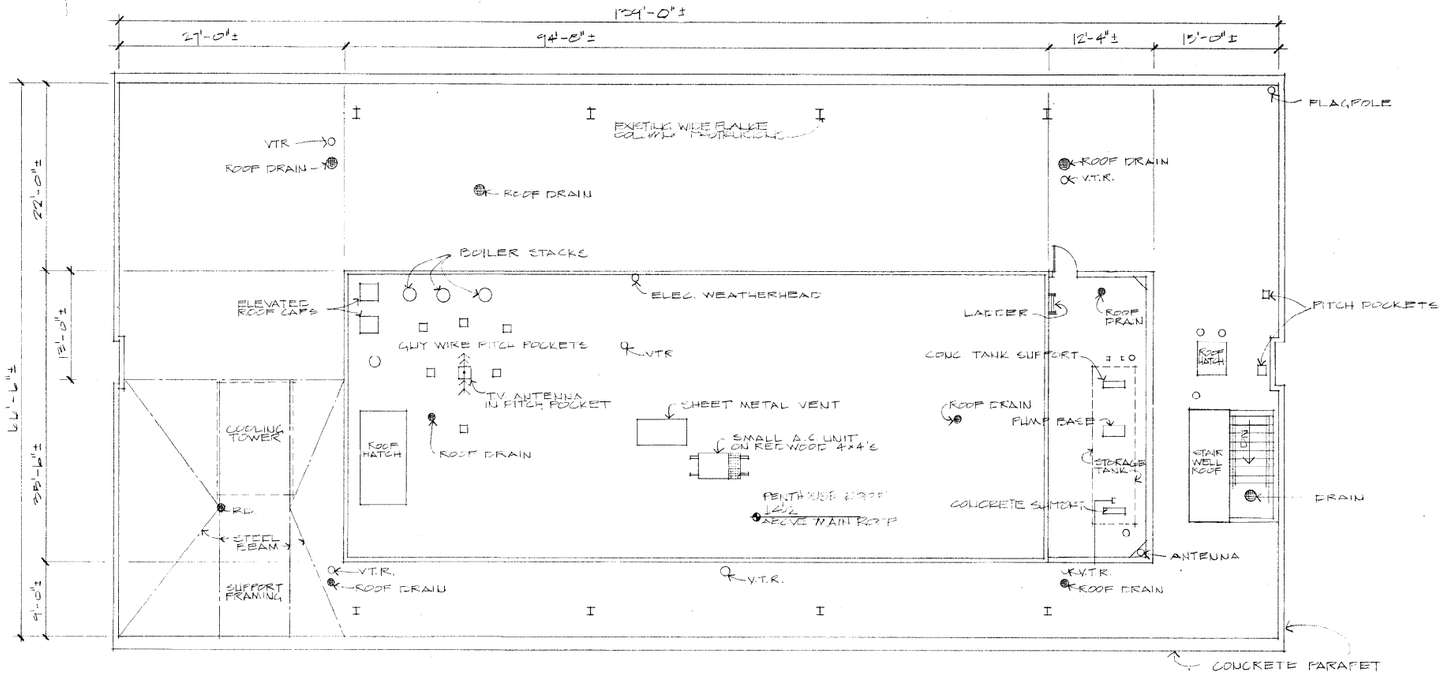

EXISTING ROOF PLAN

SCALE: 1/8" = 1'-0"

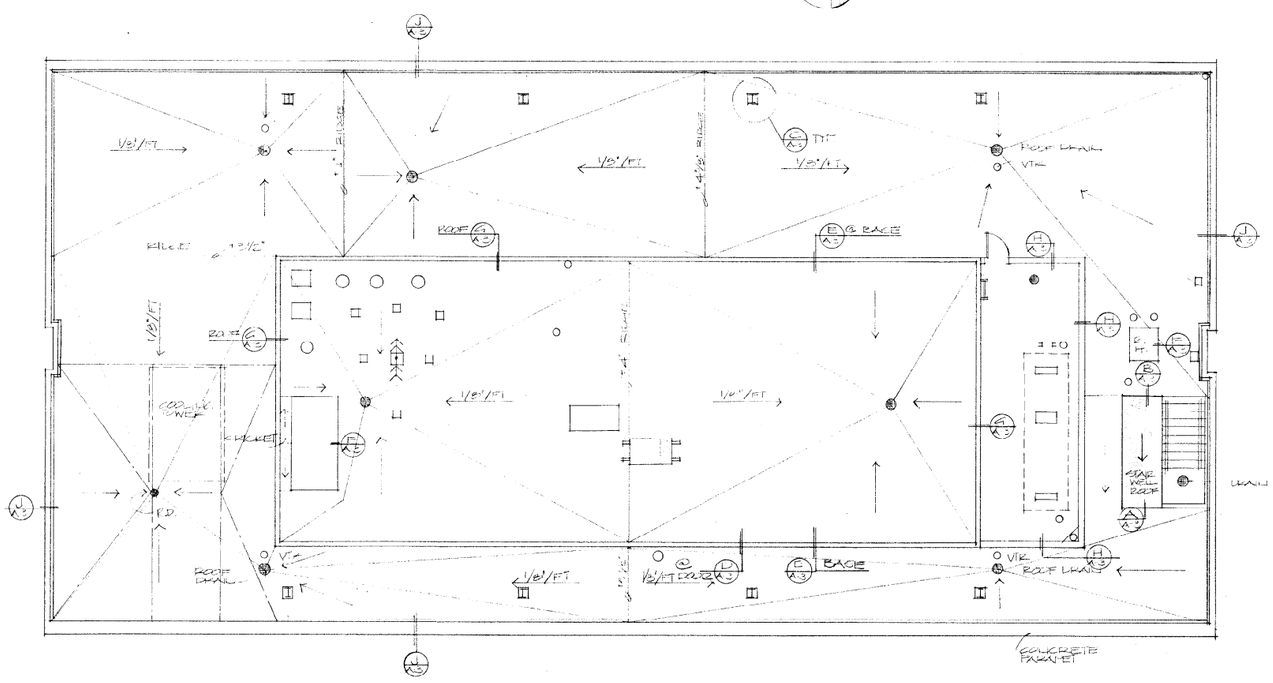

NEW ROOF PLAN

NOTES

1. REMOVE EXISTING ROOFING, ROOF INSULATION, BEAMS & PATCH ROOF DECK AS REQUIRED.
   REMOVE EXISTING FLASHING.
2. INSTALL NEW ROOF INSULATION SLOPE TO DRAIN AS SHOWN. CAP FROM NEW ROOF TO SIDE STACKS. PROVIDE NEW FLASHING.
3. NEW 4 PLY EAR FLASHING AROUND ALL VENTS THRU ROOF

CLARK COUNTY
General Services Department • Facilities Services Division
401 South Fourth Street • Las Vegas, Nevada 89101 • (702) 455-4616

DATE:
PROJECT NO. 92.0
DRAWN BY: EM
APPROVED BY:

SHEET TITLE: EXISTING & NEW ROOF PLAN

PROJECT: BRINKER BUILDING RE-ROOFING

SHEET NO. A-2

OF 5

1609

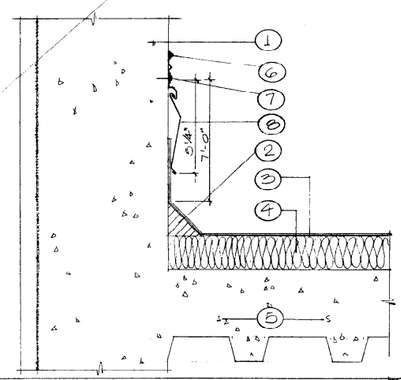

NOTES:

1. EXISTING CONCRETE PARAPET.
2. NEW 2" FIBER CANT STRIP.
3. ROOFING. SEE SPEC'S.
4. TAPERED RIGID INSUL.
5. EXISTING CONCRETE DECK.
6. SEALANT.
7. NEOPRENE S.S. WASHER.
8. 24 GA. FLASHING.

FLASHING @ PARAPET — J — SCALE: 3" = 1'-0" — DET. No. — CODE:

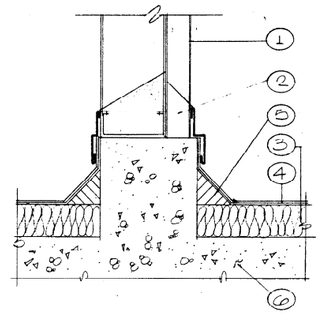

NOTES:

1. EXISTING CORRUGATED METAL SIDING.
2. FILL FLUTES WITH URETHANE TO 1" IN ABOVE FLASHING. SLOPE TO EXTERIOR.
3. RIGID INSULATION SLOPE TO DRAIN.
4. ROOFING. SEE SPEC'S.
5. 2" FIBER CANT STRIP
6. EXISTING CONCRETE DECK AND CURB.

FLASHING DET. @ VERTICAL DECK — H — SCALE: 3" = 1'-0" — DET. No. — CODE:

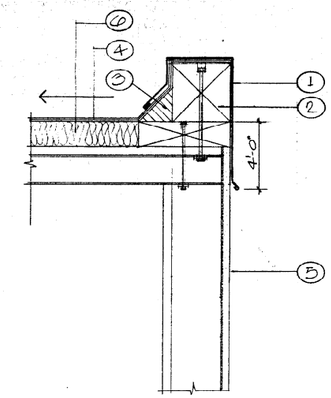

NOTES:

1. 24 GA. GALVANIZED FLASHING. EXTEND TO 2x4 EXPANSION JOINTS @ 10'-0" O.C.
2. CONTINUOUS 4x4 PRESSURE TREATED WOOD W/ 3/8" ANCHOR BOLTS @ 4'-0" O.C.
3. 2" FIBER CANT STRIP
4. ROOFING. SEE SPEC'S
5. EXISTING STUCCO O/ WOOD FRAME WALL.
6. RIGID INSULATION SLOPE TO DRAIN.

FLASHING DETAIL @ PENTHOUSE — G — SCALE: 3" = 1'-0" — DET. No. — CODE:

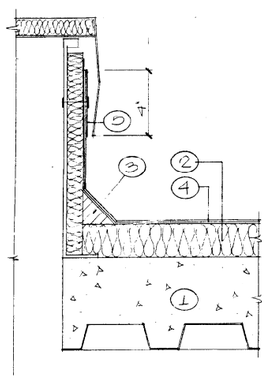

NOTES:

1. EXISTING CONCRETE DECK.
2. RIGID INSULATION SLOPE TO DRAIN.
3. 2" FIBER CANT.
4. ROOFING. SEE SPEC'S.
5. EXISTING SHEET METAL FLASHING.

FLASHING @ ROOF HATCH — F — SCALE: 3" = 1'-0" — DET. No. — CODE:

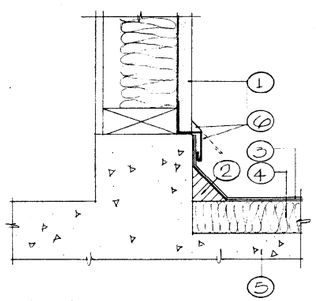

NOTES:

1. EXISTING STUCCO O/ WOOD FRAME WALL.
2. NEW 2" FIBER CANT STRIP.
3. NEW ROOFING. SEE SPECIFICATIONS.
4. NEW RIGID INSUL. SLOPE TO DRAIN.
5. EXISTING CONC. CURB AND SLAB.
6. EXISTING FLASHING TO BE LIFTED TO APPLY NEW ROOFING BELT. LAYING IN PLACE AND PROVIDE NEW SILICONE SEALANT.

FLASHING DETAIL @ STUCCO WALL — E — SCALE: 3" = 1'-0" — DET. No. — CODE:

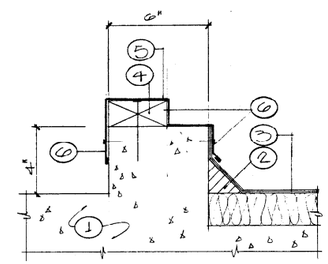

NOTES:

1. EXISTING CONCRETE CURB.
2. 2" FIBER CANT STRIP
3. ROOFING. SEE SPEC'S.
4. CONT. 2x4 ANCHOR TO CONC CURB.
5. 20 GA. GALVANIZED FLASHING W/ 1/2" DRIP.
6. ANCHOR FLASHING TO 2x4 & CONC. CURB.

CURB DETAIL @ DOORS — D — SCALE: 3" = 1'-0" — DET. No. — CODE:

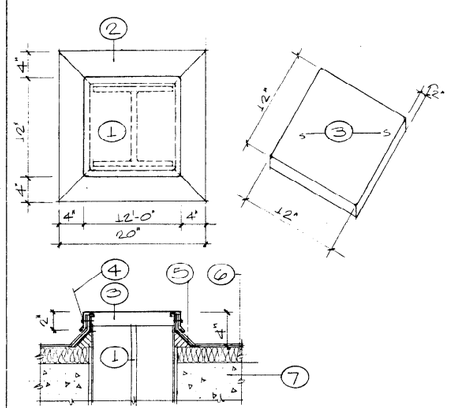

NOTES:

1. EXISTING WIDE FLANGE COL. PENETRATING THRU ROOF.
2. 24 GA. FLASHING SOLDER + SEAL ALL JOINTS.
3. 20 GA. GALVANIZED AND SOLDER AND SEAL ALL JOINTS.
4. ANCHOR CAP TO FLASHING W/ SHEET METAL SCREWS. HEAT SHRINK TUBES.
5. FIBER CANT STRIP
6. ROOFING. SEE SPECIFICATIONS.
7. EXISTING CONCRETE DECK.

FLASHING DET. @ COL. PENETRATIONS — C — SCALE: 1 1/2" = 1'-0" — DET. No. — CODE:

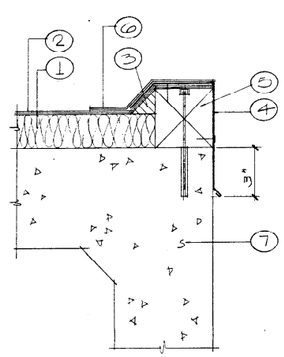

NOTES:

1. RIGID INSULATION SLOPE TO DRAIN. SEE PLAN.
2. ROOFING. SEE SPEC'S.
3. FIBER CANT STRIP
4. 20 GA. EDGE FLASHING.
5. 4"x4" CONTINUOUS.
6. 20 GA. COUNTER FLASHING.
7. EXISTING CONCRETE STRUCTURE TO REMAIN.

SECTION @ STAIRWELL ROOF — B — SCALE: — DET. No. — CODE:

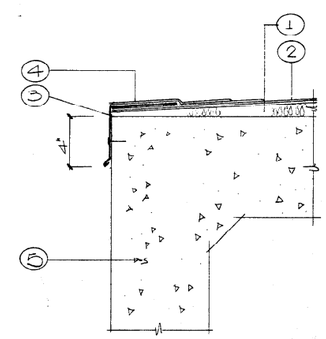

NOTES:

1. RIGID INSULATION SLOPE TO DRAIN. SEE PLAN.
2. ROOFING. SEE SPEC'S.
3. 20 GA. EDGE FLASHING.
4. 20 GA. COUNTER FLASHING.
5. EXISTING CONC STRUCTURE TO REMAIN.

SECTION @ STAIRWELL ROOF — A — SCALE: 3" = 1'-0" — DET. No. — CODE:

CLARK COUNTY
General Services Department • Facilities Services Division
401 South Fourth Street • Las Vegas, Nevada 89101 • (702) 455-4616

DATE:
PROJECT NO. 4010
DRAWN BY:
APPROVED BY:

SHEET TITLE: DETAILS

PROJECT: BRIDGER BUILDING RE-ROOFING

SHEET NO. A-3

OF 5

1609