-0142 C

LET	REVISION	ZONE	DR	ENG	CKR	DATE
SUPSD	DWG SAME NO. "A" SIZE DATED 10-18-76 W/CHNG					
A	ADDED COVERS & STANDOFFS TO FRONT & SIDE VIEWS		JFM		CIP	3-12-79

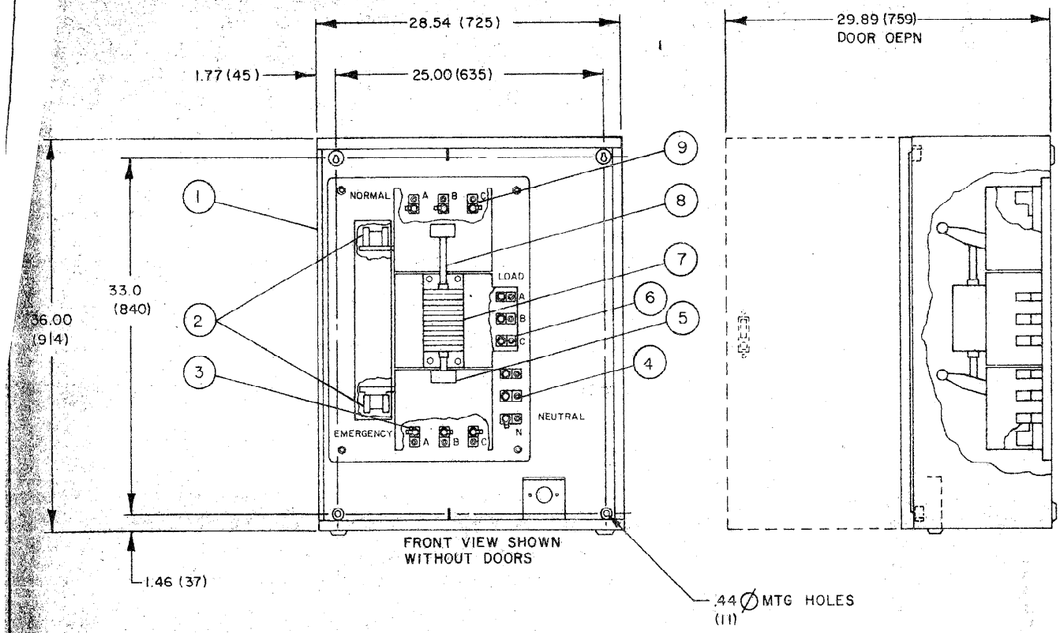

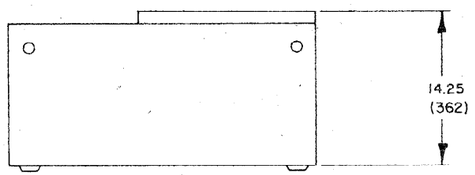

NOTES:
1. DIMENSION IN ( ) ARE IN MILLIMETRES

ITEM	BULK PART NO.	DWG SIZE	QTY.	DESCRIPTION OR MATERIAL
9		–	3	LUG – SOLDERLESS (NORMAL)
8		–	1	ROD – ACTUATOR
7		–	1	ACTUATOR – LINEAR
6		–	3	LUG – SOLDERLESS (LOAD)
5		–	2	HANDLES
4		–	3	LUG – SOLDERLESS (NEUTRAL)
3		–	3	LUG – SOLDERLESS (EMERGENCY)
2		–	6	SWITCH – AUXILIARY
1	301-4300	D	1	CONTROL BOX

TOLERANCES UNLESS OTHERWISE SPECIFIED

mm	INCH
X. ±	.XX ±
.X ±	.XXX ±
.XX ±	.XXXX ±
HOLES +0.15 −0.05	+.006 −.002
ANGLES ±	SCALE 1/8

NEXT ASSY
SIM TO
Third Angle Projection

The proprietary design information on this print is owned by Onan, a Division of Onan Corporation. Conveyance of this right is not extended to others.

310-0142 C

SEPIA FROM

	INITIAL	DATE
DR	JFM	3-5-79
CKR	CIP CER	3-5-79
ENGR	[illegible]	3/5/79
SAMP REL	[illegible]	
PROD REL	[illegible]	
PROD REL	[illegible]	3-5-79

SE.	PUR	ME
	QC	PO
51	TP	H

A DIVISION OF ONAN CORPORATION
Minneapolis, Minnesota

TITLE OUTLINE – AUTO XFR SW BOX

MODEL OT C,D&E (100-280 AMP) DWG NO. 310-0142 1009 DWG SIZE

310-0142 C

179-2110 DWG SIZE C

LET	REVISIONS	ZONE	ENG	CKR	DATE

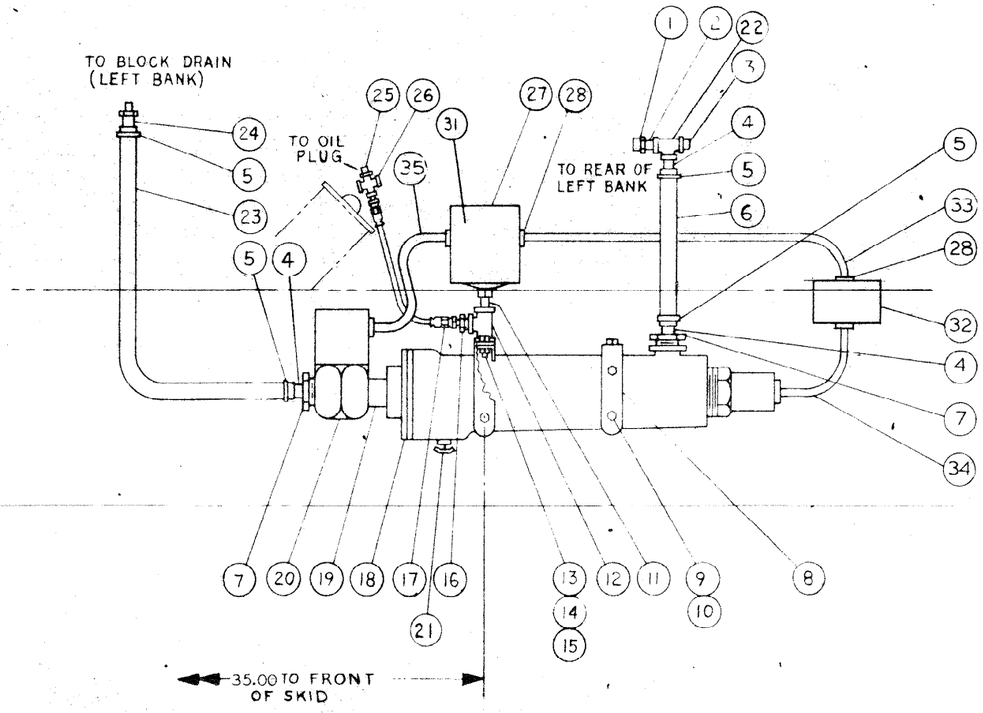

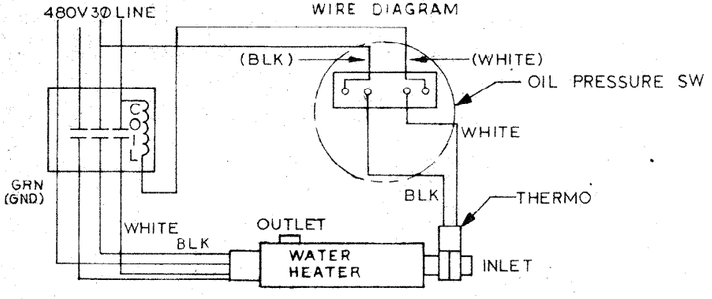

NOTES:

1. USE ITEM 32 AS JUNCTION BOX.
2. CONNECT BLACK WIRES FROM ITEMS 18 AND 20 WITH ITEM 29. CONNECT GREEN GRD WIRES FROM ITEM 18 AND LINE CORD WITH ITEM 29.
3. INSTALL TERMINAL (ITEM 30) ON WHITE LEADS OF ITEMS 18 & 20.
4. MOUNT HEATER ON INSIDE OF SKID BASE.
5.
6. PLACE SILKSCREEN ON UPPER HALF OF THE FRONT OF ITEM 32

ITEM	PART NO.	DWG SIZE	QTY	* BULK	DESCRIPTION OR MATERIAL
35	335-0121	A	1		CORD (2 COND)
34	*334-0143	P	5'		CABLE - 4 COND
33	*334-0130		3'		CORD - 2 COND
32	307-1164	P	1		CONTACTOR
31	98-1638	A*	1		SILKSCREEN (SEE NOTE 6)
30	332-0149	-	8		TERMINAL (SEE NOTE 4)
29	323-0957	-	1		CONNECTOR - WIRE NUT (SEE NOTE 3)
28	331-0027	P	4		CONNECTOR - ROMEX
27	309-0307	P	1		SWITCH - OIL PRESSURE
26	505-0763	-	1		CROSS - PIPE (1 8)
25	505-0104	-	1		NIPPLE-SHORT (1 8 x 1-1 2)
24	502 0613	-	1		CONNECTOR - HOSE
23	503-0565	-	1		HOSE (5 9 I.D.)
22	505-0060	-	1		TEE - PIPE (3 8)
21	504-0003	-	1		COCK DRAIN
20	309-0304	P	1		SWITCH - THERMOSTAT
19	505-0004	-	1		NIPPLE - CLOSE (1 x 1-1 2)
18	333-0146	P	1		HEATER - ENGINE (2000W)
17	501-0227	A	1		LINE - FLEX FUEL
16	505-0007	-	1		BUSHING - REDUCER (1 4 x 1 8)
15	862-0001	-	4		NUT - HEX (1 4-20)
14	850-0040	-	4		WASHER-LK (1 4)
13	800-0007	-	4		SCREW - HHC (1 4-20 x 1")
12	333-0142	A	1		SUPPORT - PRESS SWITCH
11	505-0099	-	1		NIPPLE - CLOSE (1 4 x 7 8)
10	870-0257	-	4		NUT - SELF LK (5 16-18)
9	821 0016	-	4		SCREW - LK H (5 16-18 x 3 4)
8	130-1192	A	2		BRACKET - WTR HEATER MTG
7	505-0455	-	2		BUSHING - REDUCER (1 x 3 8)
6	503-0387	-	1		HOSE (5 8 I.D.)
5	503-0183	-	4		CLAMP - HOSE
4	505-0135	-	3		NIPPLE - HALF (3 8 x 1-1 2)
3	505-0110	-	1		PLUG - SQUARE HEAD
2	505-0101	-	1		NIPPLE - CLOSE (3 8 x 1")
1	505-0019	-	1		BUSHING - REDUCER (1 2 x 3 8)

NOT SHOWN

179-2110

	179-2089
NEXT ASSY	SIMILAR TO
TOLERANCES UNLESS OTHERWISE SPECIFIED	
FRACTIONS ±	DECIMALS
ANGLES . . . ±	2 PLACE ± 2.00
HOLES . . . + .006 -.002	3 PLACE ±

The information shown on this print is owned by the Onan Division of Onan Corporation. Conveyance of this print does not grant to others

179-2110

SEPIA FROM	
DR	JH
CKR	H.P
ENGR	
SAMP REL	
DATE	5-10-78
PROD REL	
PROM REL	
MOD	KR

Onan — DIVISION OF ONAN CORPORATION, Minneapolis, Minnesota

INSTL-WATER JACKET HTR

179-2110 DWG SIZE C

FORM BC086

1609

612-5301

WIRING DIAGRAM

REAR VIEW PANEL

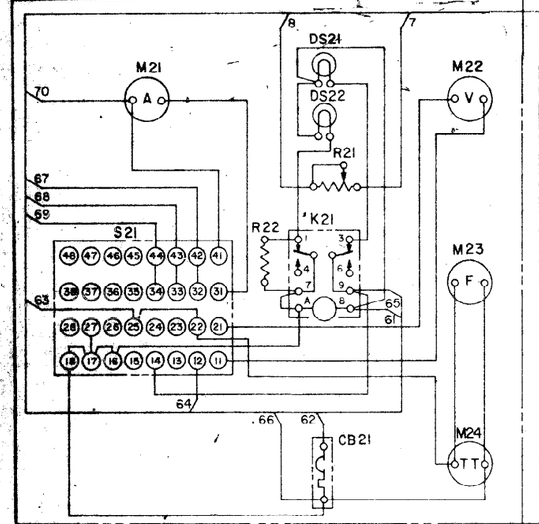

CONTROL BOX (INSIDE)

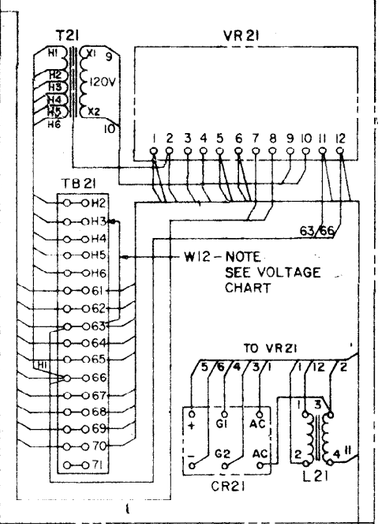

HOUSING - CONTROL BOX

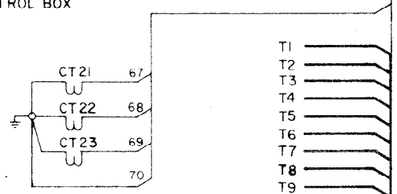

S21

POSITION	CONTACTS CLOSED			
L1-L2 3φ	11-18	21-25	31-32	41-43-44
L2-L3 3φ	11-12	21-25	31-33	41-42-44
L3-L1 3φ	11-12	21-27	31-34	41-42-43
L1-LO 3φ	11-14	21-27	31-35	41-42-43-44
OFF	11-14	21-28	31-36	41-42-43-44
L1-L2 1φ	11-16	21-22	31-32	41-43-44
L1-L2 1φ	11-16	21-22	31-33	41-42-44

SCHEMATIC DIAGRAM

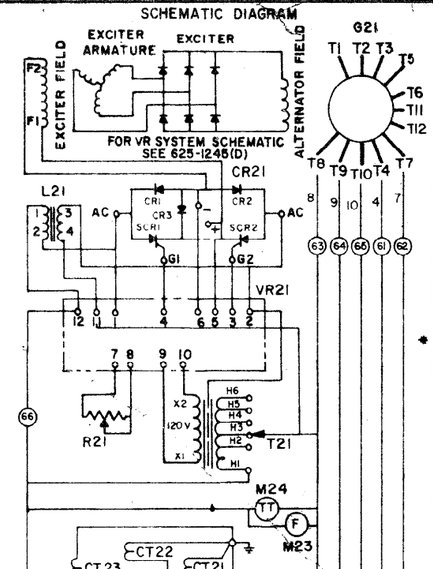

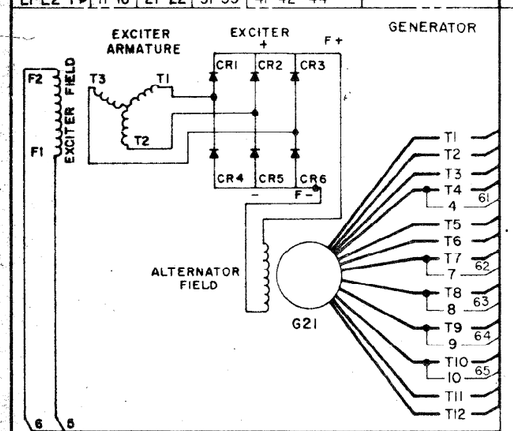

NOTE:
CONNECT LEAD W12 FROM TERMINAL TB21-63 TO TB21-(H_) PER VOLTAGE CHART BELOW

VOLTAGE CONNECTIONS

3 PHASE

	127/220V, 50 Hz, (H5)	515R	254/440V, 50 Hz, (H5)
	120/208V, 50 Hz, (H4)		240/416 V, 50 Hz, (H4)
	110/190V, 50 Hz, (H3)		220/380V, 50 Hz, (H3)
	115/200V, 50 Hz, (H4)		230/400V, 50 Hz, (H4)
	120/208V, 60 Hz, (H3)	15R	240/416 V, 60 Hz, (H3)
	127/220V, 60 Hz, (H4)		254/440V, 60 Hz, (H4)
	139/240V, 60 Hz, (H5)		277/480V, 60 Hz, (H5)
	110/220V, 50 Hz, (H6)		
515R	115/230V, 50 Hz, (H6)		
15R	120/240V, 60 Hz, (H5)		

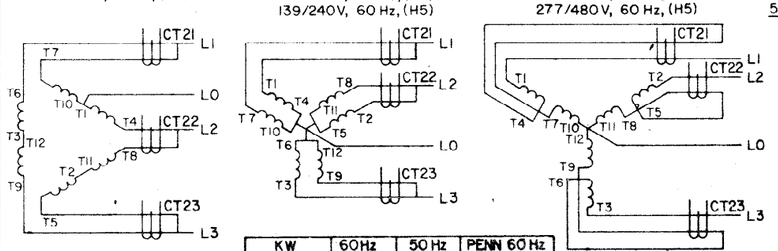

NOTE:
UNLESS OTHERWISE NOTED, ALL COMPONENTS ARE SHOWN IN THE DE-ENERGIZED POSITION

KW	60Hz	50 Hz	PENN 60 Hz
25-40	-01	-07	-13
41-45	-02	-08	-14
46-60	-03	-09	-15
61-100	-04	-10	-16
101-125	-05	-11	-17
126-180	-06	-12	-18

1 PHASE

	110/220V, 50 Hz, (H6)	
515R	115/230V, 50 Hz, (H6)	
15R	120/240V, 60 Hz, (H5)	

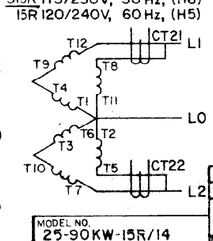

PARTS LIST

REF. DES.	PART NO.	QTY.	DESCRIPTION
CB21	320B431	1	CIRCUIT BREAKER, 2 AMP
	320P307	1	LOCK-CKT BRKR HANDLE (PENN STATE)
CT21-23	302B743	1	TRANSFORMER ASSY-CUR (25-40KW)
	302B744	1	TRANSFORMER ASSY-CUR (41-45KW)
	302B745	1	TRANSFORMER ASSY-CUR (46-60KW)
	302B746	1	TRANSFORMER ASSY-CUR (61-100KW)
	302B747	1	TRANSFORMER ASSY-CUR (101-125KW)
	302B748	1	TRANSFORMER ASSY-CUR (126-180KW)
CR21	305C524	1	RECTIFIER BRIDGE
DS21	322A131	1	LIGHT-UPPER SCALE
DS22	322A130	1	LIGHT-LOWER SCALE
G21		1	GENERATOR
K21	307B1061	1	RELAY-VOLTAGE SELECTOR
	301B3244	1	BRACKET - RELAY MTG
M21	302B719	1	AMMETER-AC 0-75,0-150A (25-40KW)
	302B720	1	AMMETER-AC 0-100,0-200A (41-45KW)
	302B721	1	AMMETER-AC 0-150,0-300A (46-60KW)
	302B722	1	AMMETER-AC 0-200,0-400A (61-100KW)
	302B723	1	AMMETER-AC 0-250,0-500A (101-125KW)
	302B724	1	AMMETER-AC 0-375,0-750A (126-180KW)
M22	302B718	1	VOLTMETER-AC, 0-300, 0-600
M23	302B221	1	METER-FREQUENCY (60 Hz)
	302B256	1	METER-FREQUENCY (50 Hz)
M24	302B466	1	METER-RUNNING TIME (60Hz)
	302B469	1	METER-RUNNING TIME (50Hz)
R21	303P170	1	RHEOSTAT-VOLTAGE ADJ 35K, 25W
	303P32	1	KNOB-RHEOSTAT
R22	350-556(REF)	1	RESISTOR-47,000, 1/2 WATT
S21	308B284	1	SWITCH-VOLT & AMMETER
	303-76	1	KNOB
T21	315D431	1	TRANSFORMER-VOLT REF
TB21	338A1242	1	MARKER-STRIP
	307P1157	1	SPRING-RELAY HOLDDOWN (K21)
L21	315B384	1	REACTOR ASSY COMM
VR21	332D1956	1	BOARD ASSY-PC VOLTAGE RGLTR
	338D730	1	WIRING HARNESS
W12	336A1913	1	LEAD ASSY
	301C3170	1	PANEL-GEN CONTROL
	301D3158	1	CONTROL BOX
	402A70	4	DAMPENER-VIBRATION
	337-49	1	STRAP-BOND
	508P1	4	GROMMET-RUBBER
	98C2169	1	SILKSCREEN-CONTROL PANEL AC
	545A23	1	PARTS LIST-AC CONT HDW

612-5301

LET.	REVISION	CKR.	ENGR.	DATE

Ongn DIVISION OF STUDEBAKER CORPORATION Minneapolis, Minnesota

DATE 1-13-77 DR JC TRACE CKR. EDR

NAME CONTROL-GEN SET AC (WIRING DIAGRAM)

DWG. NO. 612-5301 REV C

MODEL NO.
25-90KW-15R/14
25-90KW-515R/14
100-180KW-15R/1
100-180KW-515R/1
BRUSHLESS
3PH, 50/60 Hz,
12 W RECONNECTABLE

1609

612C5312

WIRING DIAGRAM

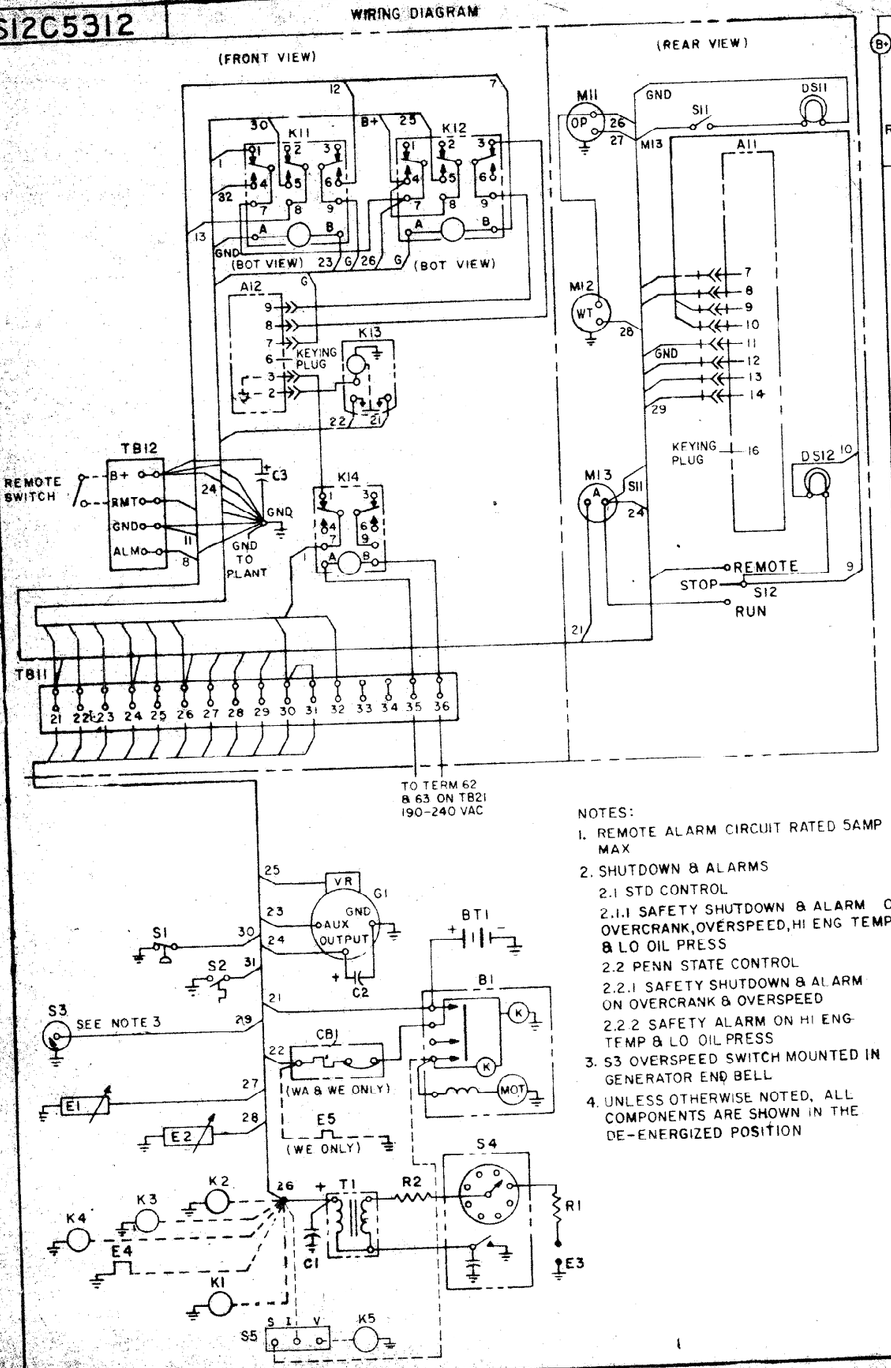

NOTES:

1. REMOTE ALARM CIRCUIT RATED 5AMP MAX
2. SHUTDOWN & ALARMS
   - 2.1 STD CONTROL
     - 2.1.1 SAFETY SHUTDOWN & ALARM ON OVERCRANK, OVERSPEED, HI ENG TEMP & LO OIL PRESS
   - 2.2 PENN STATE CONTROL
     - 2.2.1 SAFETY SHUTDOWN & ALARM ON OVERCRANK & OVERSPEED
     - 2.2.2 SAFETY ALARM ON HI ENG TEMP & LO OIL PRESS
3. S3 OVERSPEED SWITCH MOUNTED IN GENERATOR END BELL
4. UNLESS OTHERWISE NOTED, ALL COMPONENTS ARE SHOWN IN THE DE-ENERGIZED POSITION

SCHEMATIC DIAGRAM

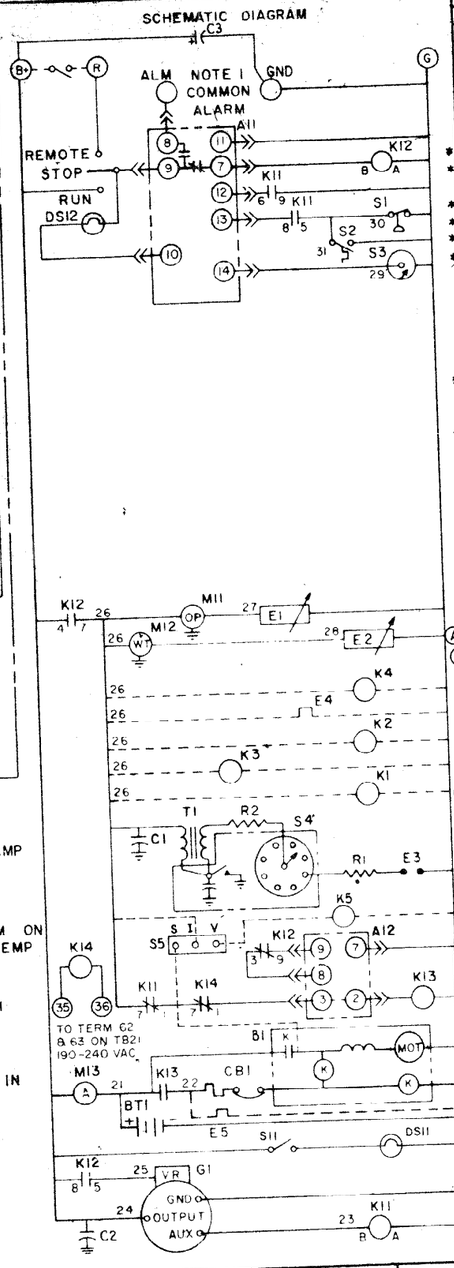

	STD CRANKER	CYCLE CRANKER
STD MONITOR	-01	-03
PENN MONITOR	-02	04

PARTS LIST (REF)

ENGINE

REF. DES.	PART NO.	QTY.	DESCRIPTION
B1		1	STARTER & SOLENOID-ENGINE
BT1		1	BATTERY-12V.
C1		1	CAPACITOR-BYPASS 0.1 UF
CB1	320P165	1	CIRCUIT BREAKER 17.5A. (WA & WE)
E1	193A244	1	SENDER-OIL PRESSURE
E2	193B246	1	SENDER-WATER TEMP
E3		8	SPARK PLUGS
E4		1	CHOKE-ELECTRIC (HEATER)
E5		1	SISSION CHOKE (WE)
G1		1	ALTERNATOR & REGULATOR
K1		1	SOLENOID-ANTI DIESELING
K2		1	SOLENOID-GAS
K3		1	SOLENOID-DAY TANK OR FUEL
K4		1	SOLENOID-WATER
R1		8	RESISTOR-SPARK PLUG
R2		1	RESISTOR-COIL
S1		1	SWITCH-LOW OIL PRESSURE
S2		1	SWITCH-HIGH WATER TEMP
S3		1	SWITCH-OVERSPEED
S4		1	DISTRIBUTOR ASSY
S5		1	SWITCH-VACUUM
T1		1	COIL-IGNITION
C2		1	CAPACITOR-BYPASS, 0.5 UF
K5		1	SOLENOID-FUEL

	CONTROL BOX PART		LIST
A11	300C679	1	MONITOR-ENGINE CONTROL (STD)
	300C730	1	MONITOR-ENGINE CONTROL (PENN STATE)
A12	300C733	1	CONTROL-STD CRANKER
	300C714	1	CONTROL-CYCLE CRANKER
DS12	322A128	1	LAMP-FAULT
K11	307B1058	1	RELAY-START DISCONNECT
K12	307B1058	1	RELAY-IGNITION
K13	307B1031	1	RELAY START SOLENOID
K14	307B1061	1	RELAY STARTER PROTECTION
C3	356A0079	1	CAPACITOR ASSY
	356A0072 (REF)	1	CAPACITOR (4000 MFD @ 30 VDC)
DS11	322-4	1	LAMP,-PANEL
	322P149	1	HOLDER-LAMP
M11	193B243	1	GAUGE-OIL PRESSURE
M12	193B245	1	GAUGE WATER TEMP
M13	302A61	1	AMMETER-CHARGE 30-0-30
S11	308P2	1	SWITCH-PANEL LIGHT
S12	308P138	1	SWITCH-SELECTOR (-01, -03)
	308P327	1	SWITCH-SELECTOR (-02, -04)
TB11	332A795 (REF)	1	TERMINAL BLOCK
	332A1241	1	MARKER STRIP
TB12	332A537 (REF)	1	TERMINAL BLOCK
	332A1239	1	MARKER STRIP
	307P1157	3	SPRING RELAY HOLDDOWN (K11, K12, K14)
	338D1065	1	WIRING HARNESS
	301D3253	1	BRACKET-ENG CONTROL
	301C3165	1	PANEL-ENGINE CONTROL
	545A25	1	PARTS LIST CONT HDW
	332 1276	2	PLUG KEYING
	98B2170	1	SILKSCREEN (-01, -03)
	98B2510	1	SILKSCREEN (-02, -04)

*WHEN USED

REV	DESCRIPTION	BY	DATE
C	ADDED S11		6-29-78
B	ADDED DS11		6-29-78
A	ADDED C3		1-14-78

MODEL NO
KR-R/IT
WA-R/IK
KR-R30, 31, 131/IT
WA-R30, 31, 131/IK

2 WIRE REMOTE STARTING

Onan

1-17-77 | JC | CDR

CONTROL-GEN SET ENG (12V IGN) (WIRING DIAGRAM)

DWG NO 61C5312

612C5312

1609

626-0110 DWG SIZE C

REAR VIEW OF METER PANEL

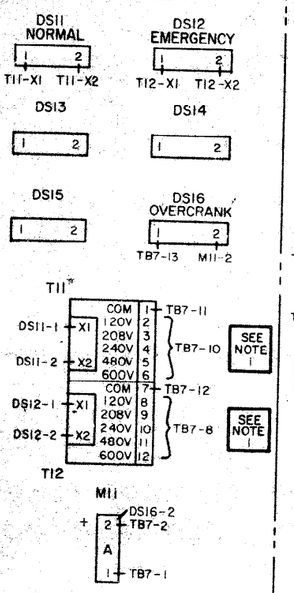

SCHEMATIC

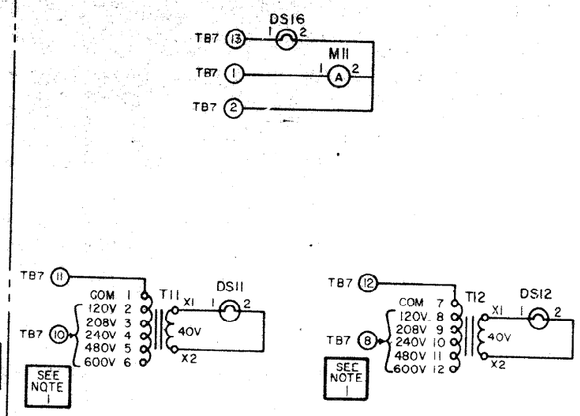

NOTE:
1. WIRE TRANSFORMER T11 & T12 AS FOLLOWS:
FOR 120V, CONNECT TB7-10 TO T11-2
TB7-8 TO T12-8
FOR 208V, CONNECT TB7-10 TO T11-3
TB7-8 TO T12-9
FOR 220-240V, CONNECT TB7-10 TO T11-4
TB7-8 TO T12-10
FOR 480V, CONNECT TB7-10 TO T11-5
TB7-8 TO T12-11
FOR 600V, CONNECT TB7-10 TO T11-6
TB7-8 TO T12-12

LEFT SIDE OF CABINET

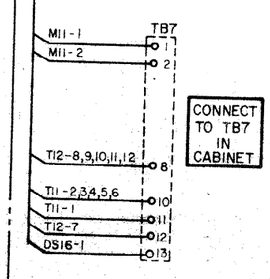

PARTS LIST

REF. DES.	PART NO.	DWG SIZE	QTY	DESCRIPTION
DS11	322-0146	A	1	LAMP-NORMAL 56V
DS12	322-0147	A	1	LAMP-EMERGENCY 56V
DS13-15	322-0141	A	3	LENS & BEZEL ASSY
DS16	322-0107	A	1	LAMP-OVERCRANK 14V
M11	302-0807	A	1	AMMETER-BAT CHARGER 0-2 AMP
T11,12	315-0374	C	1	TRANSFORMER ASSY-STEPDOWN
	338-0882	B	1	HARNESS-METER
	338-0661	C	1	HARNESS-LAMPS (NORMAL & EMERGENCY)
	301-3504	C	1	PANEL-METER
	98-2412	D	1	SILKSCREEN-METER PANEL
	98-2445	A	1	LABEL-POWER SENTRY

METER-LAMP COMBINATION: 02

CHARGE AMMETER
OVERCRANK LAMP (USE ON AT E ONLY)
NORMAL & EMERGENCY LAMPS

626-0110

THIS INFORMATION IS FOR MANUFACTURERS USE ONLY

MODEL	DASH NO
AT C,D&E	-01

LET	REVISION	CKR	ENGR	DATE
B	ADDED OT C,D,E	CIP	[illegible]	6-7-79
A	ADDED 220V		[illegible]	11 78

PROD REL: JIM VINT 4-30-7-
PROD REL:
MODEL: AT C OT C, AT D OT D, AT E OT E } SPEC B
(B)
(A) 120,208,220,240,480V, 600V 50/60Hz

Onan DIVISION OF ONAN CORPORATION Minneapolis, Minnesota

DATE 4-12-74 | DR RMS | ENGR JIM VINT | CKR CDR

METER LAMP PANEL (WIRING DIAGRAM)

SEPIA FROM. | DWG NO 626-0110 | DWG SIZE C

1609

626-0176 DWG SIZE C

REAR VIEW OF METER PANEL

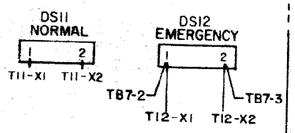

DSI3

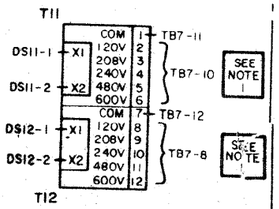

SCHEMATIC

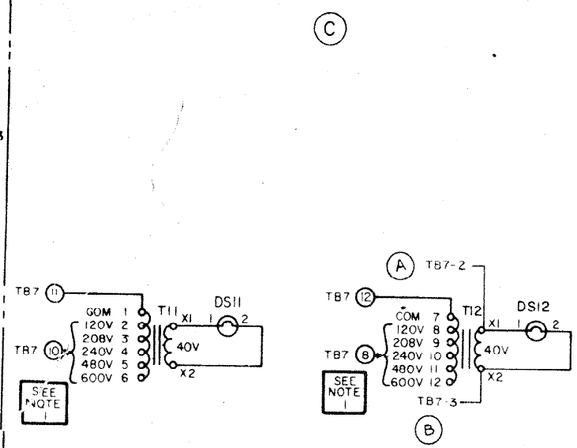

NOTE:
1. WIRE TRANSFORMER TII & TI2 AS FOLLOWS
FOR 120V, CONNECT TB7-10 TO TII-2
TB7-8 TO TI2-8
FOR 208V, CONNECT TB7 10 TO TII-3
TB7-8 TO TI2-9
FOR 220-240V, CONNECT TB7-10 TO TII-4
TB7-8 TO TI2-10
FOR 480V, CONNECT TB7-10 TO TII-5
TB7-8 TO TI2-11
FOR 600V, CONNECT TB7-10 TO TII-6
TB7-8 TO TI2-12

PARTS LIST

REF. DES.	PART NO.	DWG SIZE	QTY	DESCRIPTION
DSII	322-0146	A	1	LAMP-NORMAL 56V
DSI2	322-0147	A	1	LAMP-EMERGENCY 56V
DSI3	322-0141	A	1	LENS & BEZEL ASSY
TII,I2	315-0374	C	1	TRANSFORMER ASSY-STEPDOWN
	338-0661	C	1	HARNESS-LAMPS(NORMAL & EMERGENCY)
	336-4832	A	1	LEAD(DSI2-1 TO TB7-2)
	336-4833	A	1	LEAD (DSI2-2 TO TB7-3)
	301-4117	C	1	PANEL-METER
	98-2412	D	1	SILKSCREEN-METER PANEL(DSII,I2)
	98-2445	A	1	LABEL-POWER SENTRY

626-0176

METER - LAMP COMBINATION 19

OVERCRANK LAMP (USE ON AT E ONLY)
NORMAL & EMERGENCY LAMPS

LEFT SIDE OF CABINET

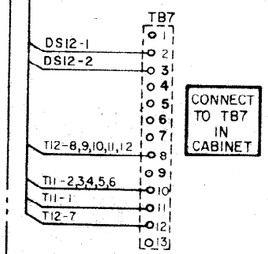

THIS INFORMATION IS FOR MANUFACTURERS USE ONLY	
MODEL	DASH NO
	-01

2018	C	REM DSI6, TB7-13 & 2	CIP	L.M. 2-14-80
	B	TB7-3 WAS TB7-2	CIP	5-8-79
	A	TB7 2 WAS TB7-1	CIP	5-8-79
ER	LET	REVISION	CKR	ENGR DATE

PROD REL [signature] 3/26/79
PROD REL [signature]

Onan DIVISION OF ONAN CORPORATION Minneapolis, Minnesota

MODEL OTUBD SPEC 19C

DATE 3-19-79 DR CIP Engr [signature] CKR CIP

METER LAMP PANEL (WIRING DIAGRAM)

120,208,220,240,480V. 600V 50/60Hz

SEPA FROM. 626-0110

DWG NO. 626-0176

DWG SIZE C

ME ✓ 95 ✓ PO ✓ PARTS

1609

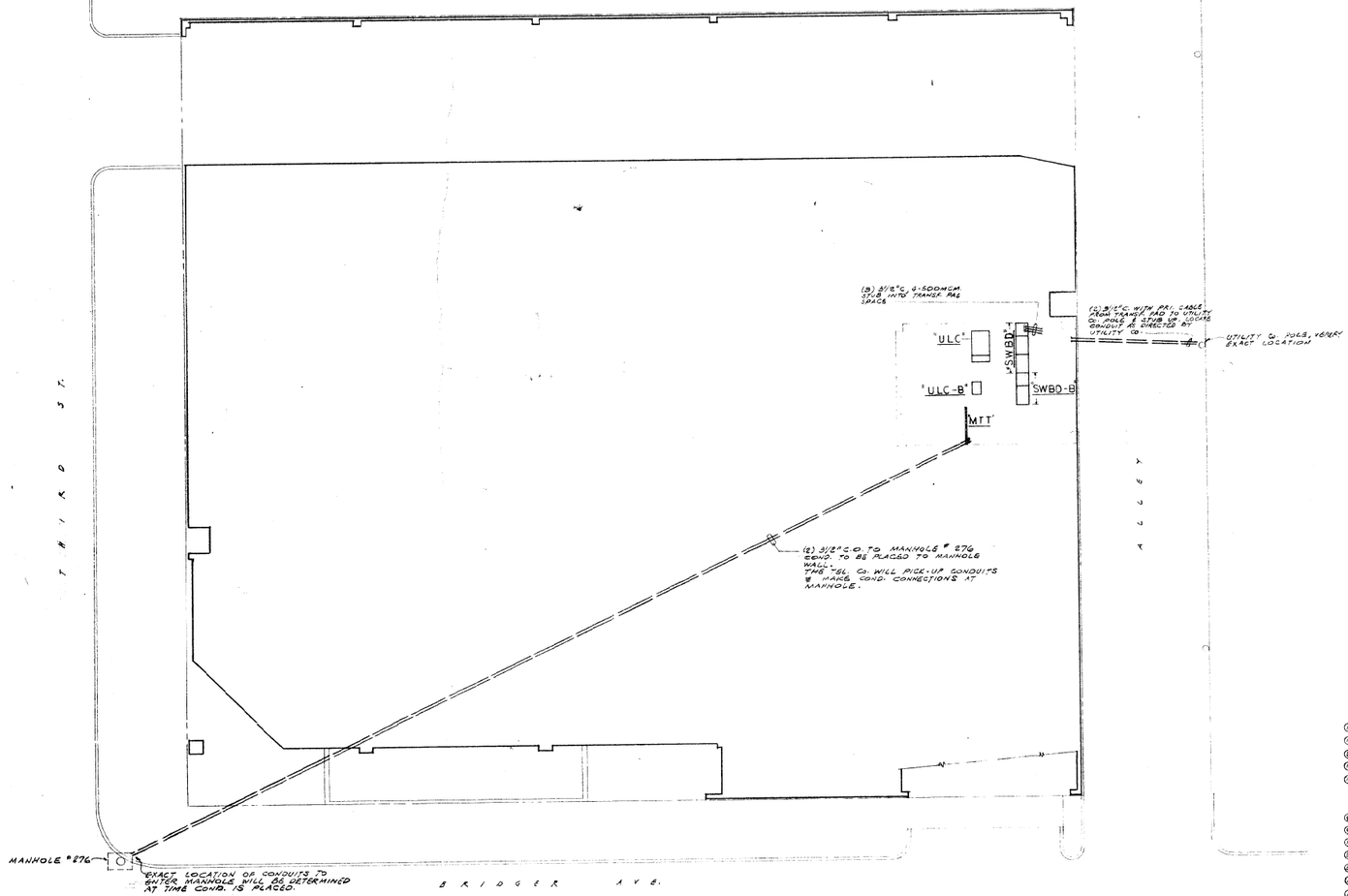

S Y M B O L L I S T

	FLUORESCENT RECESSED LIGHTING FIXTURE WITH OUTLET BOX
	FLUORESCENT SURFACE OR SUSPENDED LIGHTING FIXTURE WITH OUTLET BOX
	FLUORESCENT WALL MOUNTED LIGHTING FIXTURE WITH OUTLET BOX
	INCANDESCENT SURFACE OR SUSPENDED LIGHTING FIXTURE WITH OUTLET BOX
H	INCANDESCENT WALL MOUNTED LIGHTING FIXTURE WITH OUTLET BOX
	INCANDESCENT RECESSED LIGHTING FIXTURE
	EXIT LIGHT CEILING MOUNTED WITH DIRECTIONAL ARROW IF INDICATED
	EXIT SIGN WALL MOUNTED WITH DIRECTIONAL ARROW IF INDICATED
	15A - 3 PRONG DUPLEX CONVENIENCE RECEPTACLE - +2' UNLESS OTHERWISE NOTED (120V.-1Ø)
	15A - 3 PRONG DUPLEX CONVENIENCE RECEPTACLE IN FLOOR OUTLET BOX (120V.-1Ø)
	WATER TIGHT FLUSH FLOOR OUTLET BOX
	JUNCTION BOX IN CEILING
H	JUNCTION BOX IN WALL +12" U.N.O.
TH	THERMOSTAT OUTLET +5'-0" UNLESS OTHERWISE NOTED
CH	CEILING MOUNTED CLOCK OUTLET
CH	RECESSED CLOCK OUTLET +7'-6" UNLESS OTHERWISE NOTED
T	TELEPHONE OUTLET +12" UNLESS OTHERWISE NOTED
T	TELEPHONE OUTLET IN FLOOR
TV	T.V. OUTLET +12"
S	SPEAKER OUTLET IN CEILING
S	SPEAKER OUTLET IN WALL
	FIRE ALARM STATION
	FIRE ALARM STATION WITH BELL
C	CHIME OUTLET
B	BELL OUTLET
H	HORN OUTLET
V	BUZZER
PB	PUSHBUTTON
VC	VOLUME CONTROL +4'-0"
	FLY FAN
	DISCONNECT SWITCH - NON FUSED - H.P. RATED - IF FUSED, SIZE OF FUSES AS NOTED
CB	C.B. CIRCUIT BREAKER
MS	MAGNETIC MOTOR STARTER
CS	COMBINATION STARTER - DISCONNECT SWITCH
M	MOTOR OUTLET
	LIGHTING PANELBOARD
	POWER PANELBOARD
	TELEPHONE TERMINAL CABINET
	TELEPHONE BACKBOARD
$	SWITCH - SINGLE POLE +4'-0"
$a	SWITCH - SINGLE POLE +4'-0" SUBSCRIPT "a" DENOTED OUTLET CONTROLLED
$2	SWITCH - DOUBLE POLE +4'-0"
$3	SWITCH - 3 WAY +4'-0"
$4	SWITCH - 4 WAY +4'-0"
$K	KEY OPERATED SWITCH +4'-6"
$M	MANUAL MOTOR SWITCH WITH THERMAL PROTECTION
$P	SWITCH - 1 POLE POLE DOUBLE THROW MOMENTARY CONTACT, +4'-0" FOR REMOTE LIGHTING CONTROL
$P	SWITCH - SINGLE POLE WITH PILOT LIGHT +4'-0"
	CONDUIT RUN IN CEILING OR WALL
	CONDUIT RUN IN OR UNDER FLOOR OR UNDER GRADE
	¾"Ø - ½" CONDUIT UNLESS OTHERWISE NOTED
	2 #12 - ½" # # # # #
	4 #12 - ¾" # # # # #
	5 #12 - ¾" # # # # #
	6 #12 - 1" # # # # #
	7 #12 - 1" # # # # #
	8 #12 - 1" # # # # #
	8 #10 - 1¼" # # # # #
A-100W	LTG. FIXTURE DESIGNATION 'A' INDICATES TYPE & 100W INDICATES TOTAL WATTS PER FIXTURE
W-1,3,5	CONDUIT HOME RUN TO PANEL 'TA' WITH CIRCUITS 1, 3 & 5
¾"C.-2#12	OTHER CONDUIT & WIRE SIZE AS INDICATED
C	CONDUIT RISER - UP
•	CONDUIT RISER - DOWN
V.P.	VAPORPROOF
W.P.	WEATHERPROOF
C.O.	CONDUIT ONLY
J.B.	JUNCTION BOX
E.P.	EXPLOSION PROOF
E	ELEVATOR SIGN OUTLET
TH	TEL. JUNCTION BOX

F I X T U R E L I S T

	FIXT TYPE	DESCRIPTION	LAMP WATTS	LAMP BULB	WATTS PER FIXT.	MANUFACTURER	CATALOG NUMBER	MOUNTING	MTD. HT.	REMARKS	VOLTS
①	F1	2'x 4' FLUOR. TROFFER	40	T12RS	50	COLUMBIA	RFRS-24-250-50 W87-FCB-2045	RECESSED		ACRYLIC DIFFUSER	265
②	F2	1'x 4' FLUOR. TROFFER	30	T12RS	100	COLUMBIA	RFRS-1-2075 W87-5-112	RECESSED		ACRYLIC DIFFUSER PLASTER CEILING	120
③	F3	4' FLUOR. WALL LT.	40	T12RS	100	LIGHTOLIER	10153	WALL			120
④	F4	16' FLUOR. STRIP LT.	75	T12RS HIGH OUT.	200	COLUMBIA	SRB-178-2-LL	SURFACE		2 LAMP HIGH OUTPUT BALLASTS	265
⑤	F4A	8' FLUOR. STRIP LT.	75	T12RS HIGH OUT.	100	COLUMBIA	SRB-178-LL	SURFACE		0° BALLAST	265
	F5	4' FLUOR. INDUST. FIXT.	40	T12RS	100	SMOOT-HOLMAN	ND-20R	PEND.		SURFACE CLEAR GLASS WITH 2 BALL SUSPENSION	265
	F6	8' FLUOR. INDUST. FIXT.	60	T12RS	120	SMOOT-HOLMAN	TD-28R	SURFACE			120
⑥	F7	MERC. VAPOR FLD. LT.	400	MBC-R-50	800	SHALDA	106-634	ON SCREEN		GLEAR GLASS COVER WITH 2 BALL SUSPENSION	265
⑥	F8	" " " "	1000	MBC-R-51	1000	SHALDA	116-NV-834	ON PARAPET		GLASS COVER	265
⑦	F9	1'x 4' FLUOR. TROFFER	40	T12RS	100	COLUMBIA	RFRS-2002-50 W-83 SPECIAL	RECESSED		ACRYLIC DIFFUSER WITH BAFFLES	120
⑧	F10	EXIT SIGN WALL	25	FLUOR.	25	PRESCOLITE	EBW-11	WALL		MOUNTING AS REQUIRED	120
⑧	F10A	EXIT SIGN CEILING	25	FLUOR.	25	PRESCOLITE	EB-7	CEILING		MOUNTING AS REQUIRED	120
⑨	F11	4'x 4' FLUOR. SURFACE	40	T12RS	100	COLUMBIA	RFRS-24-250-50 W87	SURFACE		ACRYLIC DIFFUSER	120
⑨	F12	2'x 2' FLUOR. SURFACE	20	T12RS	100	COLUMBIA	RFRS-22-2003 W87	SURFACE		ACRYLIC DIFFUSER	120
	F13	RECESSED RECESSED DOWNLIGHT	100	A	100	ARVIN	2226	PEND.			120
⑦	F14	1'x 4' FLUOR. SURFACE	30	T12RS	100	COLUMBIA	RFRS-2002-50 W8-1612	SURFACE		2-12 STYRENE LENS	120
	F15	INC. WALL MTD.	100	A	100	CROUSE HINDS	VLH81869	WALL		WITH GUARD	120
⑩	F16	3'x 8' FLUOR. RECESSED	30	T12RS	250	SOLAR	1-11838 W/ C.W. BALLAST	RECESSED		SEMI-SPECULAR ALUM. WITH PARABOLIC REFLECTOR	265
⑩	F17	3'x 3' FLUOR. RECESSED	30	T12RS	150	SOLAR	1-11848	RECESSED		ANNO. LEVEL PRISM & CLEAR GLASS	265
	F18	2'x 2' RECESS. FLUR.	26	F20T12	100	COLUMBIA	RFRC-22-470 ME	RECESSED		OPAL PLEXIGLAS	265
	F19	4' FLUOR. INDUST. FIXT.	40	T12RS	100	SMOOT-HOLMAN	TD-24E	SURFACE			265
①	165	F14A	1'x 8' FLUOR. SURFACE	40	T12RS	100	COLUMBIA	RFRS-280 RS W8-1612	SURFACE		2-12 STYRENE LENS
	120	F21	11"x18" RECESS. INCL.	150	A	150	MARCO	J/G-296	RECESSED		
①	120	F20	2'x 2' FLUOR. RECESS.	30	T12RS	125	COLUMBIA	RFRS-28-6303 W7	RECESSED		PLASTER CEILING

NOTE - 1 PROVIDE JEFFERSON NO 287-2396-100 CONSTANT WATTAGE TWO LAMP 400W. BALLAST, 0° OPERATION.
NOTE - 2 PROVIDE JEFFERSON NO 287-1396-100 CONSTANT WATTAGE SINGLE LAMP 1000W BALLAST, 0° OPERATION.
NOTE - 3 24"x48" LENS BAKE, SMALL 22° .125" THICK AT MIN. DIMENSION.

① EQUIT. PRODUCTS OR GLOBE, SMOOT-HOLMAN, SOLAR & SUNBEAM. MAY BE USED
② " " " SOLAR & SUNBEAM. " " "
③ " " " SOLAR & C.W. COILS. " " "
④ " " " STEBER " " "
⑤ " " " COLUMBIA " " "

P L O T P L A N

SCALE: 1/8" = 1'-0"

MORNING NORTH TRUE NORTH

SEE SET OF PLANS MUST REMAIN ON THE JOB AT ALL TIMES DURING CONSTRUCTION
DEPT. OF BUILDING & SAFETY CITY OF LAS VEGAS

BOARD OF APPEALS

BANK OF NEVADA BUILDING

THIRD AND BRIDGER STREET — LAS VEGAS, NEVADA

USC-O-GRAM	DATE	BRIEF DESCRIPTION

DATE: 3-22-65
DRAWN: E.L.
CHECKED: B.S.S.
APPROVED:
DATE:

KENT ATTRIDGE & ASSOCIATES
ARCHITECTS ◦ A. I. A.
LAS VEGAS, NEVADA ◦ LOS ANGELES, CALIF.

SHEET NO. E-1
JOB NO. 1094

REGISTERED ARCHITECT 387 STATE OF NEVADA

169

460V.-3Ø-3W.

MCC-P			
Nº	HP	KW	FLA
1		100	133
2		100	133
3	23		28
4	23		28
5	20		26
6	20		26
7	20		26
8	15		20
9	7 1/2		11
10	7 1/2		11
11	7 1/2		11
12	7 1/2		11
13	5		7.5
14	5		7.5
15	1 1/2		2.5
16	1 1/2		2.5
17	1 1/2		2.5
18	1		1.8
19	1		1.8
20	1/2		1.0
21	1/2		1.0
22		5	7.0
TOTAL			499.1

CIRC. BRKR. SIZE = LARGEST C/B (300A) + REST FLA (366.1A) = 666.1A
FEEDER SIZE = TOTAL FLA (499.1) + 25% OF LARG. MOT. (33.3A) = 532.4A

ULC			
Nº	KW	HP	AMPS
1	6.3		18.0
2	5.0		14.0
3	57.3		151.0
4	48.4		134.0
5	35.4		98.0
TOTAL	149.4		415.0

SWBD			
Nº	KW	HP	AMPS
1	225.0		280.0
2	36.8		44.0
3	77.0		125.0
4	MCC-P	MCC-P	499.0
5		10	14.0
6		10	14.0
7		5	7.5
TOTAL			984.5

SINGLE LINE DIAGRAM
NO SCALE

PLANS APPROVED - ELECTRICAL
DOES NOT INCLUDE PLUMBING OR CONSTRUCTION
MAKE NO CHANGE WITHOUT APPROVAL
APPROVAL OF PLAN IS NOT A PERMIT TO VIOLATE ANY ORDINANCE
DATE 8-27-65
ELECTRICAL INSPECTOR - CITY OF LAS VEGAS

THIS SET OF PLANS MUST REMAIN ON THE JOB AT ALL TIMES DURING CONSTRUCTION.
DEPT. OF BUILDING & SAFETY
CITY OF LAS VEGAS

KENT ATTRIDGE REGISTERED 387 ARCHITECT STATE OF NEVADA

BANK OF NEVADA BUILDING
THIRD AND BRIDGER STREET
LAS VEGAS, NEVADA

REVISIONS DATE	BRIEF DESCRIPTION
6-21-65	△ ADD EXH. FAN E-6 TO "SWBD"

DATE: 3-22-65
DRAWN: R.L.
CHECKED: E.S.S.
APPROVED:
DATE:

KENT ATTRIDGE & ASSOCIATES
ARCHITECTS • A.I.A.
LAS VEGAS, NEVADA • LOS ANGELES, CALIF.

SHEET Nº E-2
JOB Nº 1094

1609

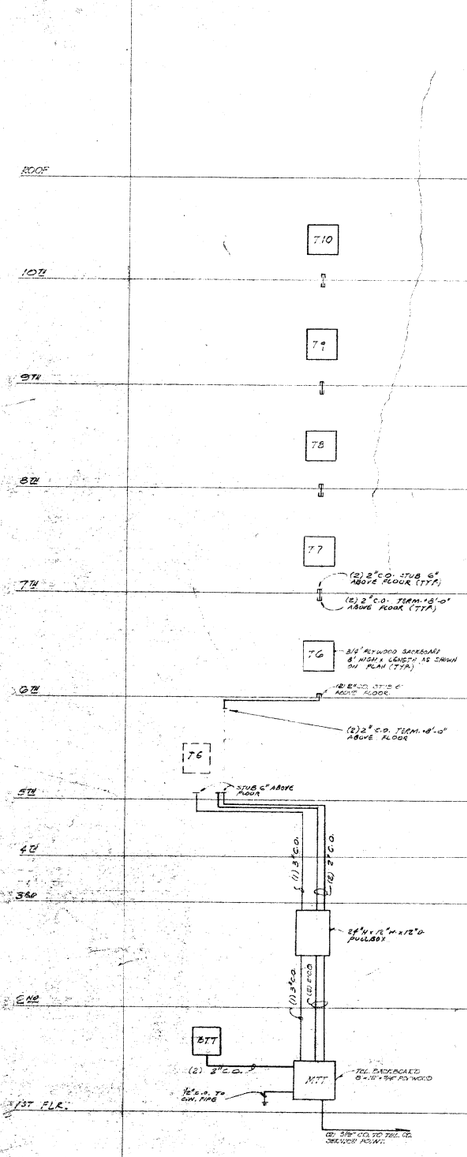

PLANS APPROVED - ELECTRICAL
DOES NOT INDICATE ACCEPTANCE OF ANY ORDINANCE
DATE 4-27-66

THIS SET OF PLANS MUST REMAIN ON THE JOB AT ALL TIMES DURING CONSTRUCTION.
DEPT. OF BUILDING & SAFETY
CITY OF LAS VEGAS

KEHT ATTRIDGE REGISTERED 387 ARCHITECT STATE OF NEVADA

BANK OF NEVADA BUILDING

THIRD AND BRIDGER STREET

LAS VEGAS, NEVADA

REVISIONS	DATE	BRIEF DESCRIPTION

DATE 3-22-65
DRAWN D.M.L.
CHECKED E.S.S.
APPROVED
DATE

KEHT ATTRIDGE & ASSOCIATES
ARCHITECTS A.I.A.
LAS VEGAS NEVADA · LOS ANGELES · CALIF.

SHEET NO. E-3
JOB NO. 609

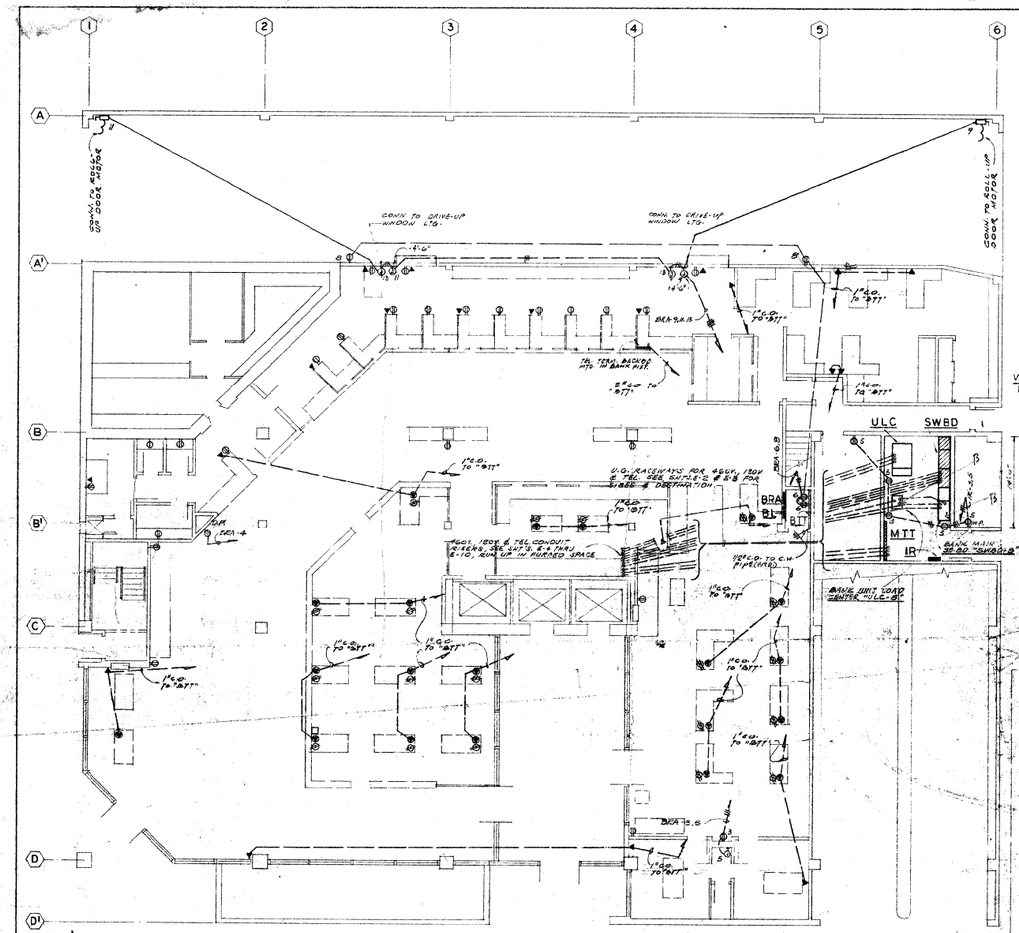

FIRST FLOOR - POWER PLAN

SCALE: 1/8" = 1'-0"

NOTE:
ALL T&C. CONDUIT SHALL BE 3/4" UNLESS OTHERWISE NOTED.

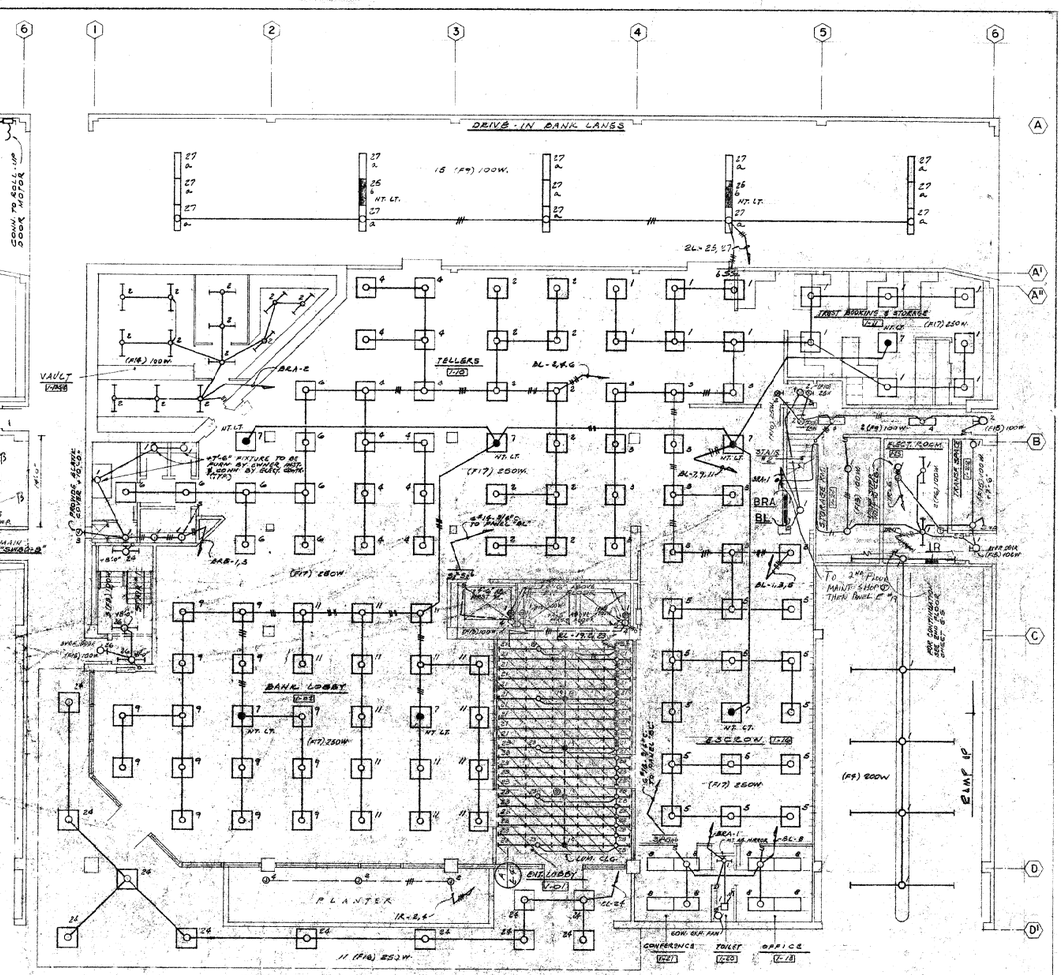

FIRST FLOOR - LIGHTING PLAN

SCALE: 1/8" = 1'-0"

NOTE:
FOR PANEL SCHEDULES "BL", "BRA" & "BRB" SEE SHEET E-6

N

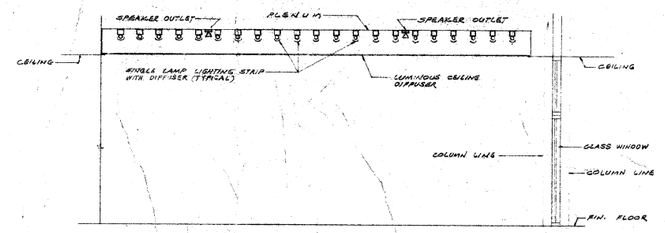

A E-4 LUMINOUS CEILING DETAIL
SCALE: 1/8"=1'-0"

THIS SET OF PLANS MUST REMAIN ON THE JOB AT ALL TIMES DURING CONSTRUCTION.
DEPT. OF BUILDING & SAFETY
CITY OF LAS VEGAS

KENT ATTRIDGE REGISTERED 337 ARCHITECT STATE OF NEVADA

PLANS APPROVED - ELECTRICAL
DOES NOT INCLUDE APPROVAL OF STRUCTURAL
APPROVAL OF PLANS DOES NOT PERMIT THE VIOLATION OF ANY ORDINANCE
ELECTRICAL DEPT. CITY OF LAS VEGAS
DATE 8-17-66

BANK OF NEVADA BUILDING

THIRD AND BRIDGER STREET — LAS VEGAS, NEVADA

DATE	BRIEF DESCRIPTION

DATE: 3-22-66
DRAWN: K.L.
CHECKED: R.S.S.
APPROVED:
DATE:

KENT ATTRIDGE & ASSOCIATES
ARCHITECTS • A. I. A.
LAS VEGAS, NEVADA • LOS ANGELES, CALIF.

SHEET NO. E-4
JOB NO. 1074

1609

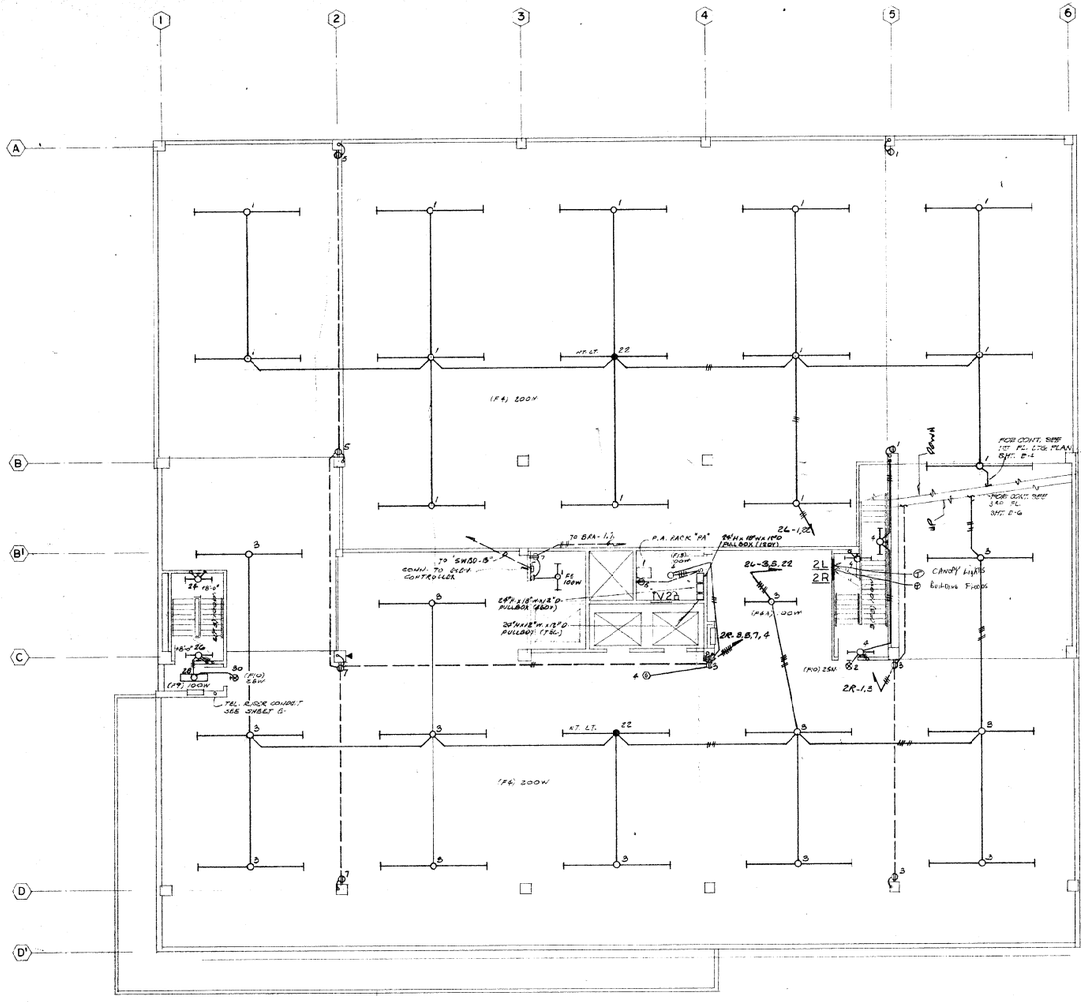

N

SECOND FLOOR-LIGHTING & POWER PLAN

SCALE: 1/8" = 1'-0"

PANEL "2L" SCHEDULE

MAIN BREAKER SIZE ____ MOUNTING SURFACE
LUGS ONLY SIZE ____ VOLTS 265/460Y - 3φ - 4W

CKT. NO.	OUTLETS	MISC.	VOLT AMPERES φ A	φ B	φ C	CIR. BKR. AMPS	POLE	OUTLET LOCATION
1.	18		3600			20	1	2ND FL.
2.	19		3800					3 RD. & 4TH FLRS.
3.	13			2500				5 AB FL.
4.	1			1000				6TH FL. FLD. LTG.
5.	12				2400			2 ND FL.
6.	1				1900			6TH FL. FLD. LTG.
7.	1		1000					
8.	1		1000					
9.	1			1000				
10.	1			1000				
11.	1				1000			
12.	1				1000			
13.	3		1200					UPPER 3RD FL. FLD. LTG.
14.	2		800					
15.	3			1200				
16.	2			800				
17.	3				1200			
18.	2				800			
19. *	3		850					ENT. LOBBY 1-01 MT. LTS
20.								SPARE
21.	25			2500				ENT. LOBBY 1-01 LUM. CLG.
22. *	5			1000				NIGHT LTS.
23.	25				2500			ENT. LOBBY 1-01 LUM. CLG.
24. ②	11				2750			EXT. CANOPY LTS.
25. *	2		850					DRIVE-IN BANK LANES MT. LTS
26.								SPACE
27.	16			1800				DRIVE-IN BANK LANES
28.								SPARE
29.								
30.								
31.								
32.								
33.								
34.								
35.								
36.								
37.								
38.								
39.								
40.								
41.								
42.								
		φ TOTALS =	11850	12300	12650			

PANEL TOTAL 36800W AMPS 44

① PROVIDE 10 P RELAY & TIME SWITCH
② PROVIDE 2P TIME SWITCH
* PROVIDE LOCK-ON DEVICE

PANEL "2R" SCHEDULE

MAIN BREAKER SIZE ____ MOUNTING SURFACE
LUGS ONLY SIZE ____ VOLTS 120/208Y - 3φ - 4W

CKT. NO.	OUTLETS	MISC.	VOLT AMPERES φ A	φ B	φ C	CIR. BKR. AMPS	POLE	OUTLET LOCATION
1.	8		1440			20	1	END FL. & ELEV. PITS
2.	—		—					3 RD FL.
3.	5			900				2ND FL.
4.	8			800				3RD FL. & ELEV. PITS
5.	7				1360			2ND FL.
6.					—			SPARE
7.	5		900					2 HR FL.
8.								SPARE
9.								
10.								
11.								
12.								
13.								
14.								SPACE
15.								
16.								
17.								
18.								
19.								
20.								
21.								
22.								
23.								
24.								
25.								
26.								
27.								
28.								
29.								
30.								
31.								
32.								
33.								
34.								
35.								
36.								
37.								
38.								
39.								
40.								
41.								
42.								
		φ TOTALS =	1340	1400	1260			

PANEL TOTAL 5000W AMPS 14

PANEL "1R" SCHEDULE

MAIN BREAKER SIZE ____ MOUNTING SURFACE
LUGS ONLY SIZE ____ VOLTS 120/208Y - 3φ - 4W

CKT. NO.	OUTLETS	MISC.	VOLT AMPERES φ A	φ B	φ C	CIR. BKR. AMPS	POLE	OUTLET LOCATION
1.	7		700			20	1	1-EE, 1-ED, 1-E4
① 2.		2-1/8	800					PLANTER
3.	1			500				MAIN TEL. TERM.
① 4.		1-1/8		600				PLANTER
5.	4				800			1-EE, 1-ED, 1-E6
6.		1/3P			900			SUPPLY UNIT
7.			600					SPARE
8.								
9.			1 1000					
10.								
11.					600			
12.								
13.								
14.								SPACE
15.								
16.								
17.								
18.								
19.								
20.								
21.								
22.								
23.								
24.								
25.								
26.								
27.								
28.								
29.								
30.								
31.								
32.								
33.								
34.								
35.								
36.								
37.								
38.								
39.								
40.								
41.								
42.								
		φ TOTALS =	1900	2100	1320			

PANEL TOTAL 5300 W. AMPS 18

① PROVIDE 2P TIME SWITCH

THIS SET OF PLANS MUST REMAIN ON THE JOB AT ALL TIMES DURING CONSTRUCTION. DEPT. OF BUILDING & SAFETY CITY OF LAS VEGAS

KENT ATTRIDGE REGISTERED 387 ARCHITECT STATE OF NEVADA

PLANS APPROVED - ELECTRICAL
DOES NOT INCLUDE PLUMBING OR CONSTRUCTION.
MAKE NO CHANGES WITHOUT APPROVAL.
APPROVAL OF PLAN IS MADE ACCORDING TO VIOLATE ANY ORDINANCE.
ELECTRICAL DEPT. - CITY OF LAS VEGAS DATE 2-27-65

BANK OF NEVADA BUILDING

THIRD AND BRIDGER STREET LAS VEGAS NEVADA

DESIGN	DATE	BRIEF DESCRIPTION

DATE: 3-26-65
DRAWN: K.L.
CHECKED: R.S.S.
APPROVED:
DATE:

KENT ATTRIDGE & ASSOCIATES
ARCHITECTS • A. I. A.
LAS VEGAS, NEVADA • LOS ANGELES, CALIF.

SHEET NO. E-5
JOB NO. 1094

1609

626-0428 | DWG SIZE D

WIRING DIAGRAM
INSIDE OF BOX

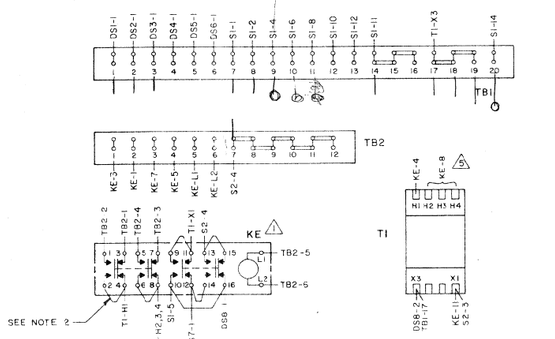

BACKSIDE OF DOOR

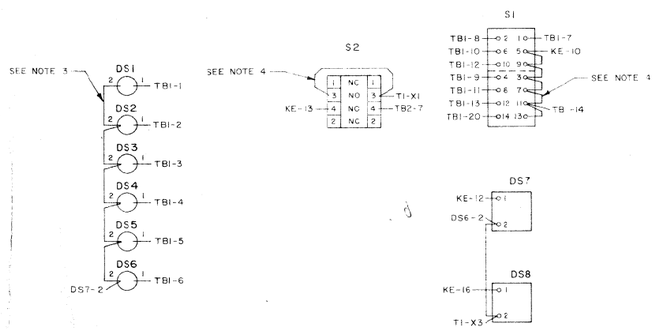

SCHEMATIC DIAGRAM

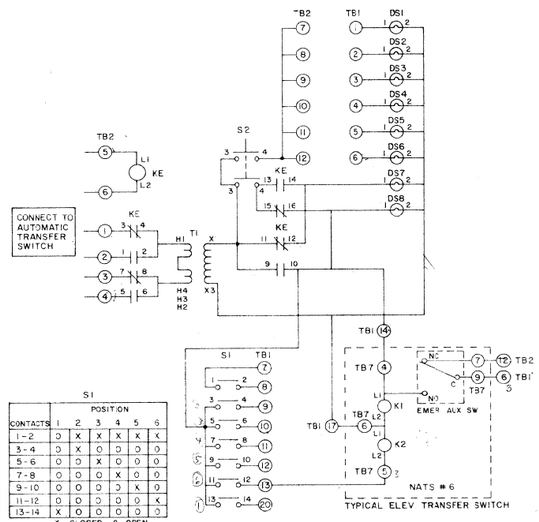

ER.

NOTES:
1. NORMALLY CLOSED CONTACTS KE-3,4 ; 7,8 ; 11,12 ; 15,16 ARE ON UPPER DECK OF RELAY
   NORMALLY OPEN CONTACTS KE-1,2 ; 5,6 ; 9,10 ; 13,14 ARE ON LOWER DECK OF RELAY
2. USE LEAD 336-6283 ON FOLLOWING KE RELAY TERMINALS :
   KE-2 TO KE-4 ; KE-6 TO KE-8 ; KE-9 TO KE-11, KE-10 TO KE-16 ; KE-12 TO KE-14 , KE-13 TO KE-15
3. USE LEAD 336-6284 ON FOLLOWING LAMP TERMINALS :
   DS6-2 TO DS5-2 ; DS5-2 TO DS4-2 ; DS4-2 TO DS3-2 ;
   DS3-2 TO DS2-2 ; DS2-2 TO DS1-2
4. USE LEAD 336-6285 ON FOLLOWING SWITCH TERMINALS
   S1-9 TO S1-5 ; S1-3 TO S1-7 ; S1-7 TO S1-11 ; S1-11 TO S1-13 ; S2-3 TO S2-3
5. WIRE TRANSFORMER, T1, AS FOLLOWS :
   FOR 208 V CONNECT T1-H2,3,4 TO T1-H2 ;
   FOR 240 V, USING LEAD 336-6283, CONNECT
   T1-H1 TO T1-H3
   T1-H2 TO T1-H4
   ALSO CONNECT LEAD MARKED T1-H2,3,4 TO T1-H4
   AND CONNECT LEAD MARKED T1-X3 TO T1-X2
   FOR 480 V, USING LEAD 336-6283, CONNECT
   T1-H2 TO T1-H3
   ALSO CONNECT LEAD MARKED T1-H2,3,4 TO T1-H4
   AND CONNECT LEAD MARKED T1-X3 TO T1-X2

DASH NO	VOLTAGE	T1	KE
-01	208	315-0461	307-1831
-02	240	315-0462	307-1831
-03	480	315-0462	307-1832

VOLTAGE CODE:
4,54,5D,55D,4X,54X

PARTS LIST

	REF DES	PART NO	UNIT MFR	QTY	DESCRIPTION
	DS1-6	322-0274	P	6	LAMP-INDICATOR
	DS7	322-0243	B	1	LAMP-HOUSING (GREEN)
	DS8	322-0242	B	1	LAMP-HOUSING (RED)
	KE	307-1831	P	1	RELAY-INTERFOSING (208/240 V)
		307-1832	P	1	RELAY-INTERFOSING (440/480 V)
*	S1	308-0543	P	1	SWITCH-SELECTOR
	S2	308-0544	C	1	SWITCH-PUSHBUTTON
		308-0566	C	2	CONTACT BLOCK
	T1	315-0461	P	1	TRANSFORMER-STEPDOWN (208 V)
		315-0462	P	1	TRANSFORMER-STEPDOWN (240/480)
	TB1	332-1005	A	REF	TERMINAL BLOCK (20 PL)
		332-1788	A	1	MARKER STRIP
	TB2	332-1468	A	REF	TERMINAL BLOCK (12 PL)
		332-1469	A	1	MARKER STRIP
(A) *		322-0296	P	1	WASHER-LAMP LOCKING
		338-1403	D	1	WIRING HARNESS-CONTROL
		336-6284	A	5	LEAD
		336-6283	A	8	LEAD
		336-6285	A	5	LEAD
		301-5480	C	1	DOOR ASSY-ELEV CONT
		301-5611	D	1	CONTROL BOX
		332-0051	-	3	CLAMP-LOOP
		406-0334	A	2	WASHER-STUD RTNR
		406-0333	A	2	STUD-FASTENER
		406-0332	A	2	RECEPTACLE-FASTENER
		406-0362	A	1	LOCK-PANEL
		406-0364	A	2	SPACER-DOOR LATCH
		99-0525	A		NAMEPLATE

3776	A	ADDED 322-0296 (P)		12-2-80
2309		PROD RELEASE		
ER	LTR	REVISION	ENGR	DATE

DIVISION OF ONAN CORPORATION
Minneapolis, Minnesota

LAMP REL.	DASH NO.	MODEL NO.	DRAWN 2-6-80 MRD
MISC.		ERS	TITLE CONTROL ASSY-ERS
WIRE REL.			REPRO FROM 626-0428
PARTS	PO		SIZE D

626-0428

626-0428

1609

THIRD FLOOR LIGHTING & POWER PLAN

SCALE: 1/8" = 1'-0"

N

PANEL "BRA" SCHEDULE

MAIN BREAKER SIZE ______ MOUNTING FLUSH
LUGS ONLY SIZE ______ VOLTS 120/208V.-3Φ-4W

CKT. NO.	Outlets ○	Outlets ⊖	Outlets MISC.	Volt Amperes Φ A	Volt Amperes Φ B	Volt Amperes Φ C	Cir. Bkr. AMPS	Cir. Bkr. POLE	OUTLET LOCATION
1.	4			500			20	1	1-14, 1-20, BANK EL. RM.
2.	13			1300					1-05/8 VAULT
3.		1			600				D.F.
4.		1			600				D.F.
5.			J-BOX			1000			WTR. HTR.
6.		2				500			TEL. BACKBOARD
7.		1		180					SECOND FLR. ELEV. RM.
8.		2		300					DRIVE-IN LANES
9.			1		1000				ROLL-UP DOOR MOTOR
10.					—				SPARE
11.			1			1000			ROLL-UP DOOR MOTOR
12.						—			FUTURE
13.			2-J/B'S	400					DRIVE-UP WINDOWS
14.				1300					FUTURE
15.					1000				
16.					1000				
17.						1000			
18.						1000			
19.				1300					
20.				1000					
21.					1000				
22.					1000				
23.						1000			
24.						1000			
25.				1000					
26.				1000					
27.					1000				
28.					1000				
29.						1000			
30.						1000			
31.									
32.									
33.									
34.									
35.									
36.									
37.									
38.									
39.									
40.									
41.									
42.									
			Φ TOTALS =	8480	8200	8500			

PANEL TOTAL 25,180 W AMPS 70A

PANEL "BRB" SCHEDULE

MAIN BREAKER SIZE ______ MOUNTING ______
LUGS ONLY SIZE ______ VOLTS 120/208V.-3Φ-4W.

CKT. NO.	Outlets ○	Outlets ⊖	Outlets MISC.	Volt Amperes Φ A	Volt Amperes Φ B	Volt Amperes Φ C	Cir. Bkr. AMPS	Cir. Bkr. POLE	OUTLET LOCATION
1.	6			900			20	1	S.D. BOOTHS
2.				1100					FUTURE
① 3.			1		200				NIGHT DEP.
4.					1400				FUTURE
5.						1000			
6.						1000			
7.				1000					
8.				1000					
9.					1400				
10.					1000				
11.						1000			
12.						1000			
13.				1000					
14.				1000					
15.					1000				
16.					1000				
17.						1000			
18.						1000			
19.				1000					
20.				1000					
21.					1000				
22.					1000				
23.						1000			
24.						1000			
25.				1000					
26.									
27.									
28.									
29.									
30.									
31.									
32.									
33.									
34.									
35.									
36.									
37.									
38.									
39.									
40.									
41.									
42.									
			Φ TOTALS =	9000	8000	8000			

PANEL TOTAL 25000 AMPS 69A.

① PROVIDE 2P TIME CLOCK

PANEL "BL" SCHEDULE

MAIN BREAKER SIZE ______ MOUNTING FLUSH
LUGS ONLY SIZE ______ VOLTS 277/480V.-3Φ-4W.

CKT. NO.	Outlets ○	Outlets ⊖	Outlets MISC.	Volt Amperes Φ A	Volt Amperes Φ B	Volt Amperes Φ C	Cir. Bkr. AMPS	Cir. Bkr. POLE	OUTLET LOCATION
1.	13			3250			20	1	1-10, 1-11
2.	11			2750					1-10
3.	12				3000				1-10
4.	12				3000				1-10
5.	14					3500			1-16
6.	8					2000			1-10
7.	7			1750					1-02, 1-10, 1-11, 1-16 NT. LTS.
8.	8			1600					1-18, 1-21
9.	14				3500				1-02
10.					200				SPARE
11.	15					3750			1-02
12.						1300			SPARE
13.									SPARE
14.									
15.									
16.									
17.									
18.									
19.									SPACE
20.									
21.									
22.									
23.									
24.									
25.									
26.									
27.									
28.									
29.									
30.									
31.									
32.									
33.									
34.									
35.									
36.									
37.									
38.									
39.									
40.									
41.									
42.									
			Φ TOTALS =	9350	9700	10550			

PANEL TOTAL 29600 W AMPS 36

THIS SET OF PLANS MUST REMAIN ON THE JOB AT ALL TIMES DURING CONSTRUCTION. DEPT. OF BUILDING & SAFETY CITY OF LAS VEGAS

KENT ATTRIDGE REGISTERED 387 ARCHITECT STATE OF NEVADA

PLANS APPROVED - ELECTRICAL
DOES NOT INCLUDE PLUMBING OR CONSTRUCTION.
MAKE NO CHANGE WITHOUT APPROVAL.
APPROVAL OF PLAN IS NOT A PERMIT TO VIOLATE ANY ORDINANCE.
ELECTRICAL DEPT. - CITY OF LAS VEGAS J.J. DATE 8-27-65

BANK OF NEVADA BUILDING

THIRD AND BRIDGER STREET — LAS VEGAS, NEVADA

REVISIONS DATE	BRIEF DESCRIPTION
6-21-65	△ ADD EXH. FAN E-6 CONTROLS

DATE: 3-22-65
DRAWN: K.L.
CHECKED: B.S.S.
APPROVED: ______
DATE: ______

KENT ATTRIDGE & ASSOCIATES
ARCHITECTS • A. I. A.
LAS VEGAS, NEVADA • LOS ANGELES, CALIF.

SHEET No. E-6
JOB No. 1094

1609

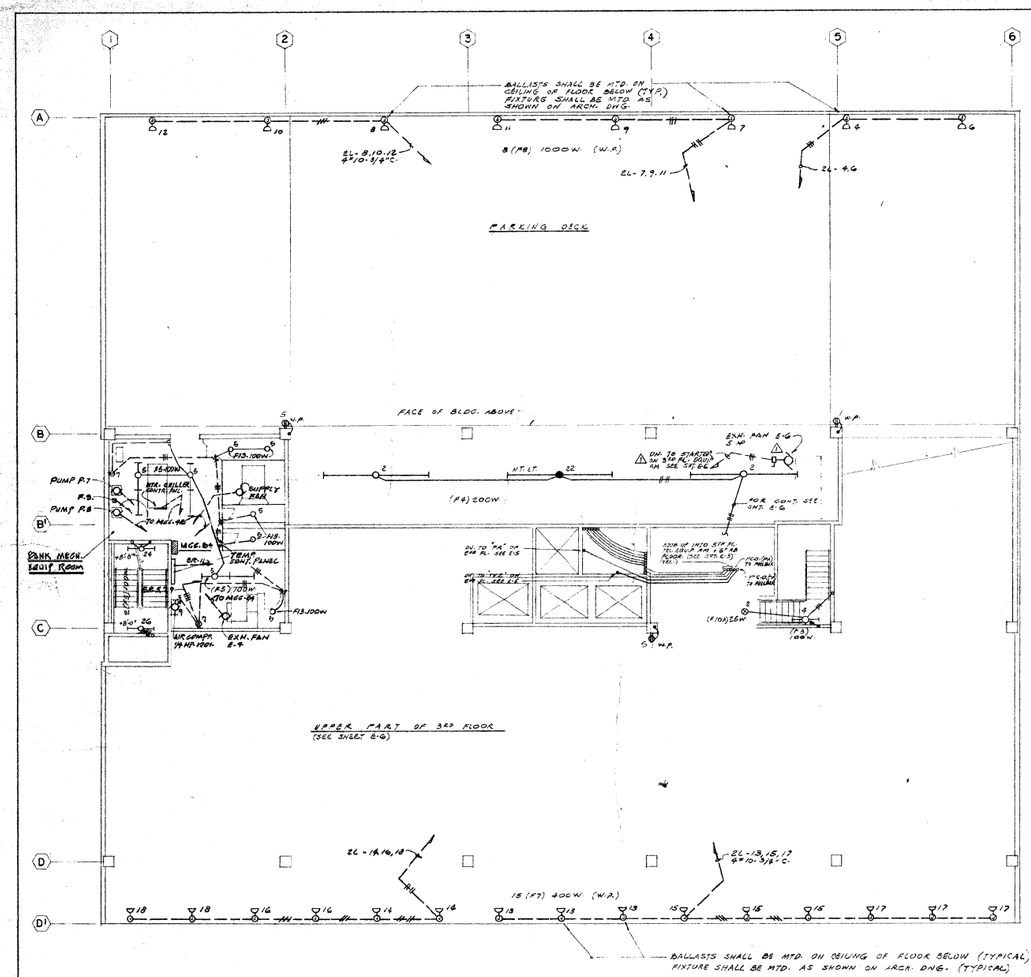

FOURTH FLOOR LIGHTING & POWER PLAN

SCALE: 1/8" = 1'-0"

THIS SET OF PLANS MUST REMAIN ON THE JOB AT ALL TIMES DURING CONSTRUCTION. DEPT. OF BUILDING & SAFETY CITY OF LAS VEGAS

KENT ATTRIDGE REGISTERED 387 ARCHITECT STATE OF NEVADA

PLANS APPROVED - ELECTRICAL
NOTE: NOT INCLUDE FLUORESCENT CONSTRUCTION.
MAKE NO CHANGE WITHOUT APPROVAL.
APPROVAL OF PLANS IS NOT A PERMIT TO VIOLATE ANY ORDINANCE.
DATE 8-27-65
ELECTRICAL DEPT. - CITY OF LAS VEGAS

BANK OF NEVADA BUILDING

THIRD AND BRIDGER STREET — LAS VEGAS, NEVADA

REVISIONS	DATE	BRIEF DESCRIPTION
	6-21-65	ADD EXH. FAN E-6

DATE: 3-28-65
DRAWN: K.L.
CHECKED: S.S.S.
APPROVED:
DATE:

KENT ATTRIDGE & ASSOCIATES
ARCHITECTS • A. I. A.
LAS VEGAS, NEVADA • LOS ANGELES, CALIF.

SHEET No. E-7
JOB No. 1094

1609

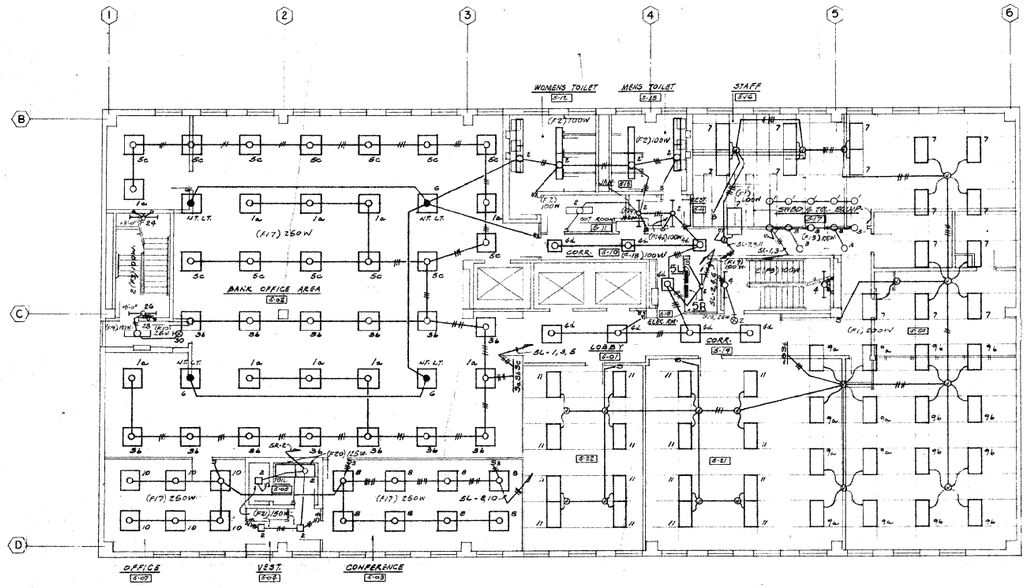

FIFTH FLOOR LIGHTING PLAN
SCALE: 1/8" = 1'-0"

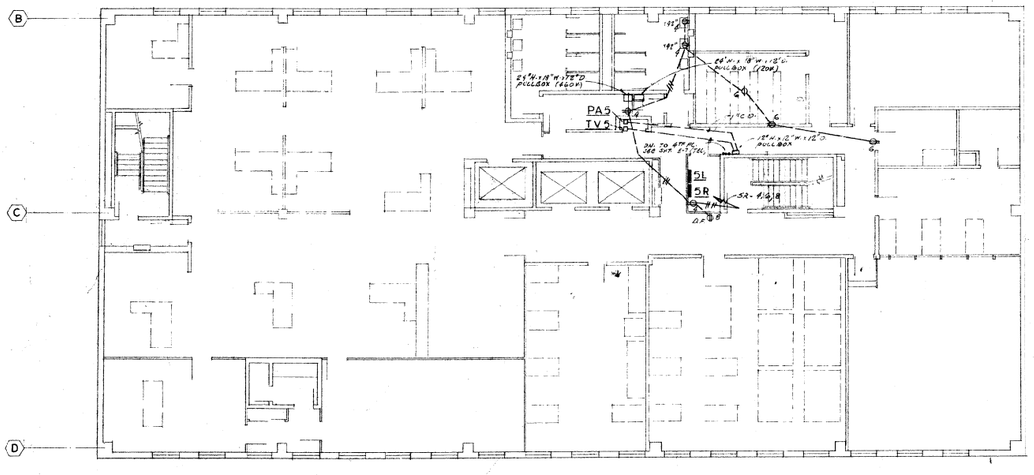

FIFTH FLOOR POWER PLAN
SCALE: 1/8" = 1'-0"

PANEL '5L' SCHEDULE

MAIN BREAKER SIZE _____ MOUNTING SURFACE
LUGS ONLY SIZE _____ VOLTS 208/120V-3Ø-4W.

CKT. NO.	OUTLETS	MISC.	VOLT AMPERES A	B	C	CIR. BKR. AMPS	POLE	OUTLET LOCATION
1.	10		2500			20	1	E-02
2.	11		1100					E-11, E-12, E-13, E-14, E-15
3.	13			3250				E-05
4.	8			1600				E-01, E-10, E-19
5.	13				3250			E-02
6.	4				1000			E-02, HT. LTS.
7.	16		3200					E-16, E-17, E-20
8.	8		2000					E-03
9.	16			3200				E-20
10.	6			1800				E-07
11.	16				3800			E-21, E-22
12.								S P A C E
13.								
14.								
15.								
16.								
17.								S P A C E
18.								
19.								
20.								
21.								
22.								
23.								
24.								
25.								
26.								
27.								
28.								
29.								
30.								
31.								
32.								
33.								
34.								
35.								
36.								
37.								
38.								
39.								
40.								
41.								
42.								
	TOTALS =		8800	9350	7450			

PANEL TOTAL 23,600 W AMPS 66

PANEL '5R' SCHEDULE

MAIN BREAKER SIZE _____ MOUNTING SURFACE
LUGS ONLY SIZE _____ VOLTS 120/208V-3Ø-4W.

CKT. NO.	OUTLETS	MISC.	VOLT AMPERES A	B	C	CIR. BKR. AMPS	POLE	OUTLET LOCATION
1.	6		900			20	1	TEL. EQUIP. RM.
2.	5		750					E-06, E-08, E-09
3.	6			900				TEL. EQUIP. RM.
4.	4			720				E-13, E-11, E-18
5.	11				1100			MECH. EQ. RM. (BANK)
6.	3				590			E-17
7.	2		800					MECH. EQ. RM. (BANK)
8.	1		600					D.F.
9.		1		700				AIR COND. EQ. RM.
10.				1000				FUTURE
11.		1			500			TEMP. CONT. PANEL
12.					1000			FUTURE
13.			1000					
14.			1000					
15.				1000				
16.				1000				
17.					1020			
18.					1020			
19.			1000					
20.			1000					
21.				1060				
22.				1000				
23.					1020			
24.					1020			
25.			1000					
26.			800					
27.				1000				
28.				500				
29.					1000			
30.					500			
31.								
32.								
33.								
34.								
35.								
36.								
37.								
38.								
39.								
40.								
41.								
42.								
	TOTALS =		8160	8920	8600			

PANEL TOTAL 26810 AMPS 72

PLANS APPROVED - ELECTRICAL
DOES NOT INCLUDE OTHERS IN CONSTRUCTION.
MAKING CHANGES OPTIONAL.
APPROVAL OF PLANS DOES NOT CONSTITUTE A VIOLATION OF ANY ORDINANCE.
ELECTRICAL DEPT. - CITY OF LAS VEGAS
DATE 3-27-68

THIS SET OF PLANS MUST REMAIN ON THE JOB AT ALL TIMES DURING CONSTRUCTION.
DEPT. OF BUILDING & SAFETY
CITY OF LAS VEGAS

KENT ATTRIDGE REGISTERED 387 ARCHITECT STATE OF NEVADA

BANK OF NEVADA BUILDING

THIRD AND BRIDGER STREET — LAS VEGAS, NEVADA

REVISIONS	DATE	BRIEF DESCRIPTION

DATE: 3-22-68
DRAWN: K. L.
CHECKED: E.S.S.
APPROVED:
DATE:

KENT ATTRIDGE & ASSOCIATES
ARCHITECTS • A. I. A.
LAS VEGAS, NEVADA • LOS ANGELES, CALIF.

SHEET NO. E-8
JOB NO. 1094

1609

NOTE:
ALL LTG. FIXTURES SHALL BE TYPE F1 200W. UNLESS OTHERWISE SHOWN

SIXTH FLOOR LIGHTING PLAN
TYP. FOR 7TH, 8TH, 9TH & 10TH FLOORS
SCALE: 1/8" = 1'-0"

NOTES:
1 - ALL CONDUIT TO BE RUN UNDER SLAB.
2 - TEL. CONDUIT SHALL BE 3/4" UNLESS OTHERWISE SHOWN

PLANS APPROVED - ELECTRICAL
DOES NOT ... OR CONSTRUCTION.
MAKE NO CHANGE WITHOUT APPROVAL.
APPROVAL OF PLAN IS NOT A PERMIT TO VIOLATE ANY ORDINANCE.
DATE 8-27-65
ELECTRICAL DEPT. - CITY OF LAS VEGAS

SIXTH FLOOR POWER PLAN
TYP. FOR 7TH, 8TH, 9TH & 10TH FLOORS
SCALE: 1/8" = 1'-0"

TYPICAL FOR PANELS "7L", "8L", "9L", "10L".

PANEL "6L" SCHEDULE

MAIN BREAKER SIZE ______ MOUNTING SURFACE
LUGS ONLY SIZE ______ VOLTS 265/460V. - 3φ - 4W.

CKT. NO.	OUTLETS ○	OUTLETS ⊖	MISC.	VOLT AMPERES φ A	VOLT AMPERES φ B	VOLT AMPERES φ C	CIR. BKR. AMPS	CIR. BKR. POLE	OUTLET LOCATION
1.	15			3000			20	1	LEASING AREA
2.	16			3200					
3.	18				3600				
4.	16				3200				
5.	16					3200			
6.	16					3200			
7.									SPARE
8.									
9.									
10.									
11.									
12.									
13.									
14.									
15.									SPACE
16.									
17.									
18.									
19.									
20.									
21.									
22.									
23.									
24.									
25.									
26.									
27.									
28.									
29.									
30.									
31.									
32.									
33.									
34.									
35.									
36.									
37.									
38.									
39.									
40.									
41.									
42.									
			φ TOTALS =	6200	6800	6400			

PANEL TOTAL 19600 W. AMPS 25

TYPICAL FOR PANELS "7R", "8R", "9R", "10R".

PANEL "6R" SCHEDULE

MAIN BREAKER SIZE ______ MOUNTING SURFACE
LUGS ONLY SIZE ______ VOLTS 120/208V. - 3φ - 4W.

Note	CKT. NO.	OUTLETS ○	OUTLETS ⊖	MISC.	VOLT AMPERES φ A	VOLT AMPERES φ B	VOLT AMPERES φ C	CIR. BKR. AMPS	CIR. BKR. POLE	OUTLET LOCATION	
	1.	10			1000			20	1	TOIL., VEST., ELECT. RM.	
	2.	1		11-EXITS	375					EXIT SIGNS @ STAIR #2	*
	3.	2				800				CORRIDOR	
①	4.	10				1000				STAIR #2 LTS.	*
	5.	8					800			CORRIDOR	
①	6.	10					1000			STAIR #2 LTS	*
	7.		6		1200					LEASING AREA	
	8.		6		1200					TOIL., EL. RM.	
	9.		6			1200					
	10.		6			1200				CORR.	
	11.		6				1200			CORR.	
	12.		6				1200				
	13.		6		1200						
	14.		6		1200					EL. RM., TOIL.	
	15.		6			1200					
	16.		6			1200					
	17.		6				1200				
	18.		6				1200				
	19.		4		800					TOIL.	
	20.		7		1400						
	21.		4			800					
	22.		6			1200					
	23.		6				1200				
①	24.	12					1200			STAIR #1 LTS.	*
	25.		6		1200					LEASING AREA	
①	26.	11			1100					STAIR #1 LTS	*
	27.									SPARE	
②	28.	8				800				VESTS. @ STAIR #1	*
	29.						600			SPARE	
	30.			8-EXITS			200			EXIT SIGNS @ STAIR #1	*
	31.									SPARE	
	32.										
	33.										
	34.										
	35.		1				600			D.F.	
	36.									SPARE	
	37.										
	38.										
	39.										
	40.										
	41.										
	42.										
				φ TOTALS =	10675	9400	9800	30075 W		84 A.	*
					9200	7600	7400	24200 W.		67 A.	

*① PROVIDE 6P RELAY & TIME SWITCH
*② PROVIDE 2P TIME SWITCH

* PANEL "GR" ONLY

THIS SET OF PLANS MUST REMAIN ON THE JOB AT ALL TIMES DURING CONSTRUCTION. DEPT. OF BUILDING & SAFETY CITY OF LAS VEGAS

KENT ATTRIDGE REGISTERED 387 ARCHITECT STATE OF NEVADA

BANK OF NEVADA BUILDING
THIRD AND BRIDGER STREET
LAS VEGAS, NEVADA

REVISIONS	DATE	BRIEF DESCRIPTION

DATE: 3-22-65
DRAWN: K.L.
CHECKED: B.S.S.
APPROVED:
DATE:

KENT ATTRIDGE & ASSOCIATES
ARCHITECTS • A.I.A.
LAS VEGAS, NEVADA • LOS ANGELES, CALIF.

SHEET No. E-9
JOB No. 107

1609