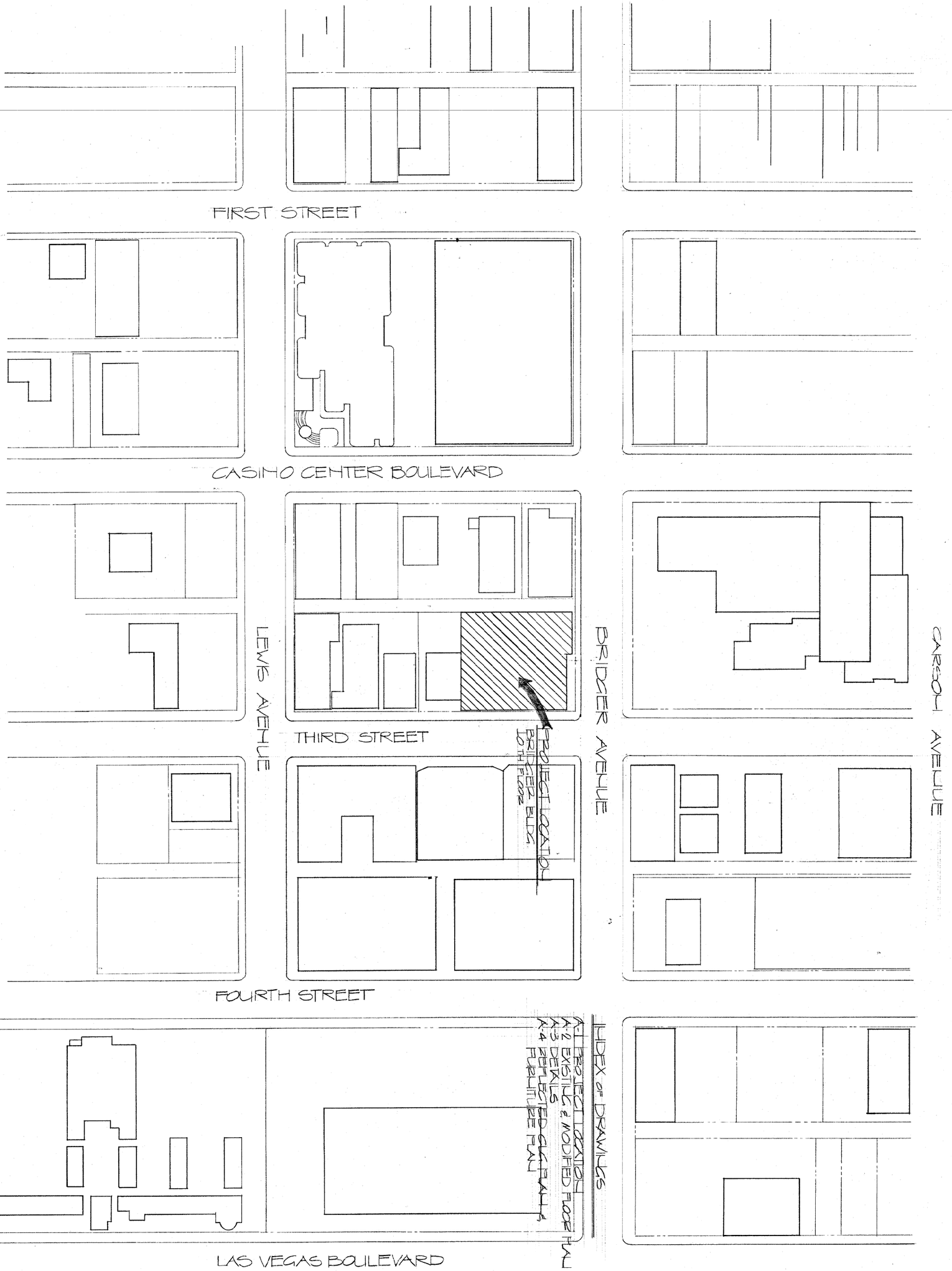

SHEET TITLE: PROJECT LOCATION

PROJECT: PROPOSED G.I.S OFFICE
10 TH FLOOR BRIDGER BLDG.

DATE: SEPT. 89 | PROJECT NO. 8948
DRAWN BY: LC
APPROVED BY:

SHEET NO. A-1 OF 4

1209

CLARK COUNTY
General Services Department • Facilities Services Division
401 South Fourth Street • Las Vegas, Nevada 89101 • (702) 455-4616

LEGEND

EXISTING TO REMAIN

TO BE DEMOLISHED

NEW CONSTRUCTION

NOTE: EXISTING DOORS TO BE RELOCATED AT NEW DOOR OPENINGS. ALL DOORS TO BE 3'-0" x 7'-0"

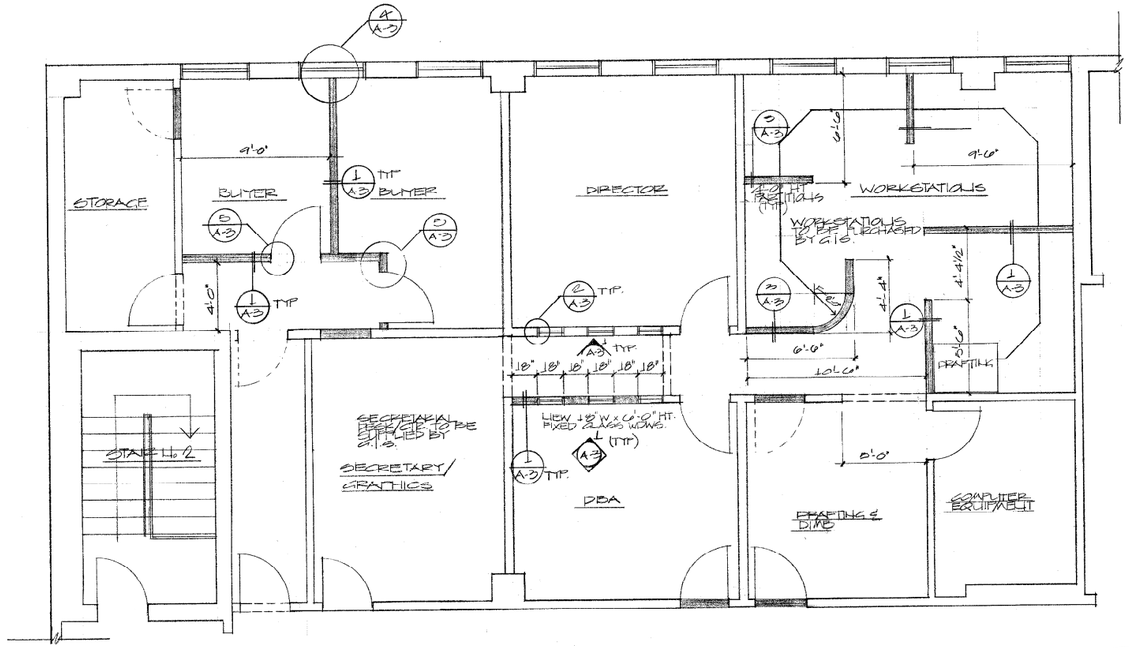

MODIFIED FLOOR PLAN

SCALE: 1/4" = 1'-0"

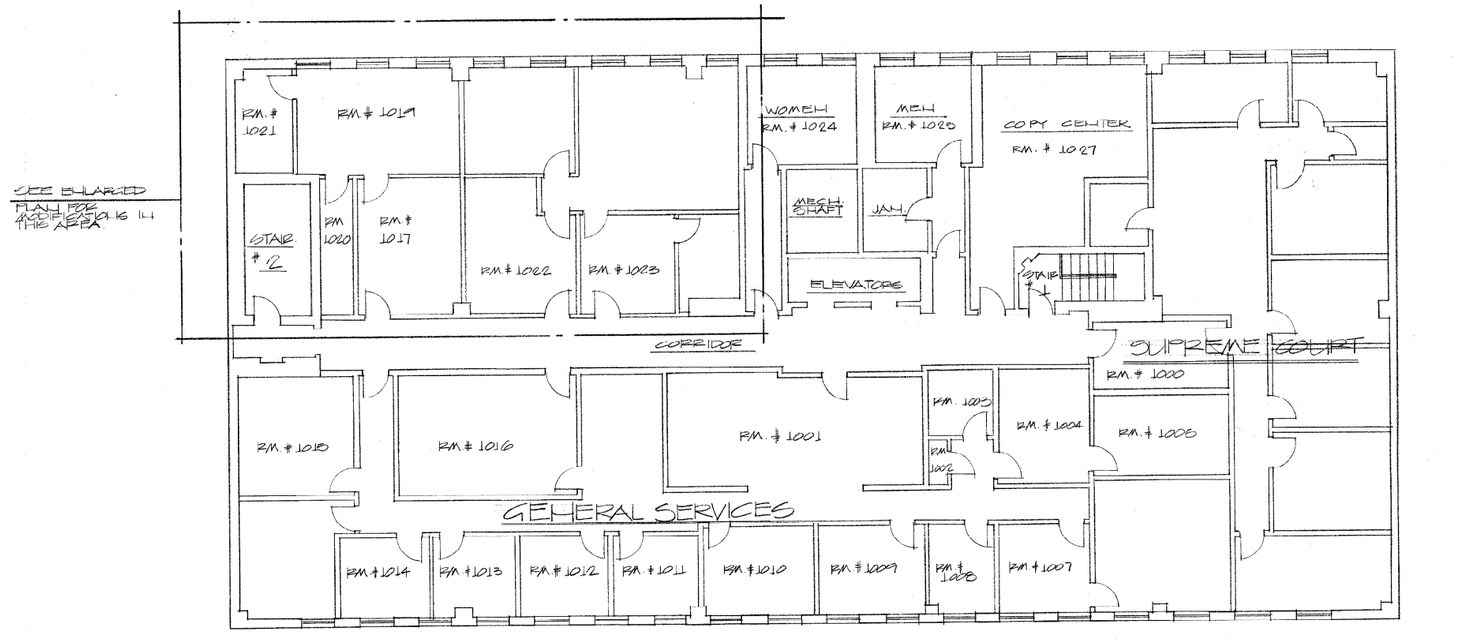

EXISTING 10TH. FLOOR PLAN

SCALE: 1/8" = 1'-0"

CLARK COUNTY
General Services Department • Facilities Services Division
401 South Fourth Street • Las Vegas, Nevada 89101 • (702) 455-4616

PROPOSED FLOOR PLAN
EXISTING FLOOR PLAN

PROPOSED G.I.S. OFFICE
10TH. FLOOR BRIDGER BLDG.

SHEET NO. A-2

4
1609

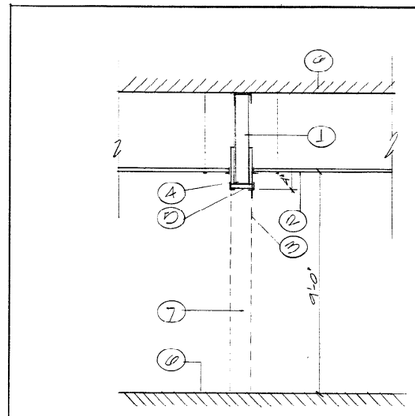

HOTES:

1. EXISTING WALL.
2. EXISTING SUSPENDED CEILING SYSTEM.
3. CORNER BEAD.
4. NEW 3 5/8" METAL STUD.
5. 5/8" TYPE 'X' GYPSUM BOARD. TAPE & MUD.
6. EXISTING CONC. SLAB.
7. EXISTING WALL TO BE DEMOLISHED.

WALLS TO BE DEMOLISHED DET. (6) SCALE: 3/4"=1'-0" DET. No. CODE

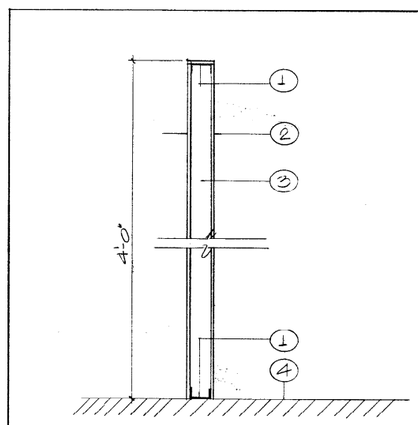

HOTES:

1. 3 5/8" METAL STUD 24 GAUGE.
2. 5/8" TYPE 'X' GYPSUM BOARD BOTH SIDES.
3. 3 5/8" METAL STUDS @ 16" O.C.
4. EXISTING CONC. SLAB.

NEW 4'-0" HT. PARTITIONS (3) SCALE: 1"=1'-0" DET. No. CODE

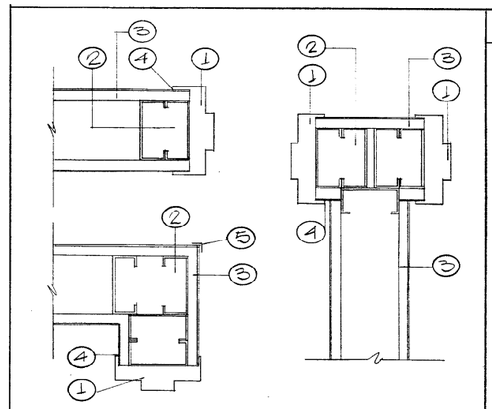

HOTES:

1. METAL DOOR FRAME.
2. 2 5/8" METAL STUDS @ 16" O.C. MAX.
3. 5/8" GYPSUM BOARD.
4. CAULKING.
5. CORNER BEAD.

DOOR FRAME TYPICALS (5) SCALE: 3"=1'-0" DETAIL No. CODE: 5

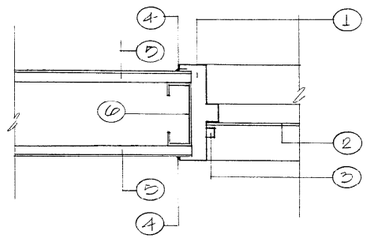

HOTES:

1. STEEL FRAME TO MATCH EXISTING.
2. 1/4" WIRE GLASS PLATE.
3. 2 1/2" & 2 1/8" APPLIED
4. CAULKING.
5. 5/8" TYPE 'X' GYPSUM BOARD.
6. 3 5/8" METAL STUDS @ 16" O.C.

NOTE: TYP. DETAIL FOR JAMBS, HEAD & SILL.

WINDOW FRAME DETAIL (2) SCALE 3"=1'-0" DET. No. CODE

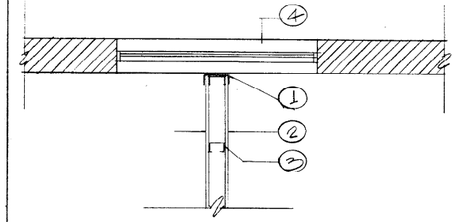

HOTES:

1. METAL CHANNEL ATTACHED TO WALL.
2. 5/8" TYPE 'X' GYP BD.
3. 2 5/8" METAL STUDS @ 16" O.C.
4. EXISTING EXTERIOR WALL & WINDOW.

PARTITION DETAIL (4) SCALE 3/4"=1'-0" DET. No. CODE

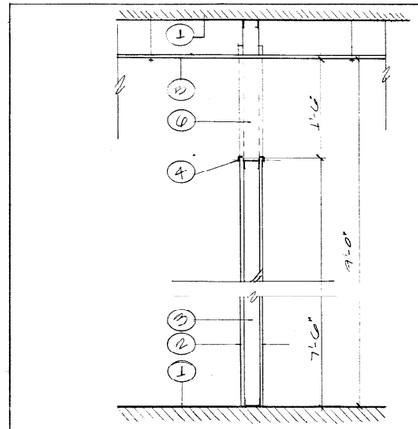

HOTES:

1. EXISTING CONC. SLAB.
2. 5/8" TYPE 'X' GYP BD BOTH SIDES. TAPE & MUD.
3. 3 5/8" METAL STUDS @ 16" O.C.
4. CORNER BEAD.
5. EXISTING SUSPENDED CEILING SYSTEM.
6. PROVIDE BACK TO BACK RUNNER TRACK AT EXISTING FLOOR & CEILING PLATES AT TRACK FRAMES & WALL INTERSECTIONS.

TYP. 7'-0" PARTITION (1) SCALE DET. No. CODE

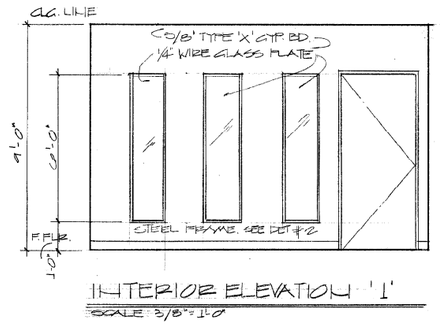

INTERIOR ELEVATION '1'
SCALE: 3/8"=1'-0"

CLARK COUNTY
General Services Department • Facilities Services Division
401 South Fourth Street • Las Vegas, Nevada 89101 • (702) 455-4616

SEPT. 97 | 8940
LC

INTERIOR ELEVATION DETAILS
PROPOSED G.I.S OFFICE
10TH FLOOR BRIDGER BLDG.

SHEET NO. A-3
OF 4
1609

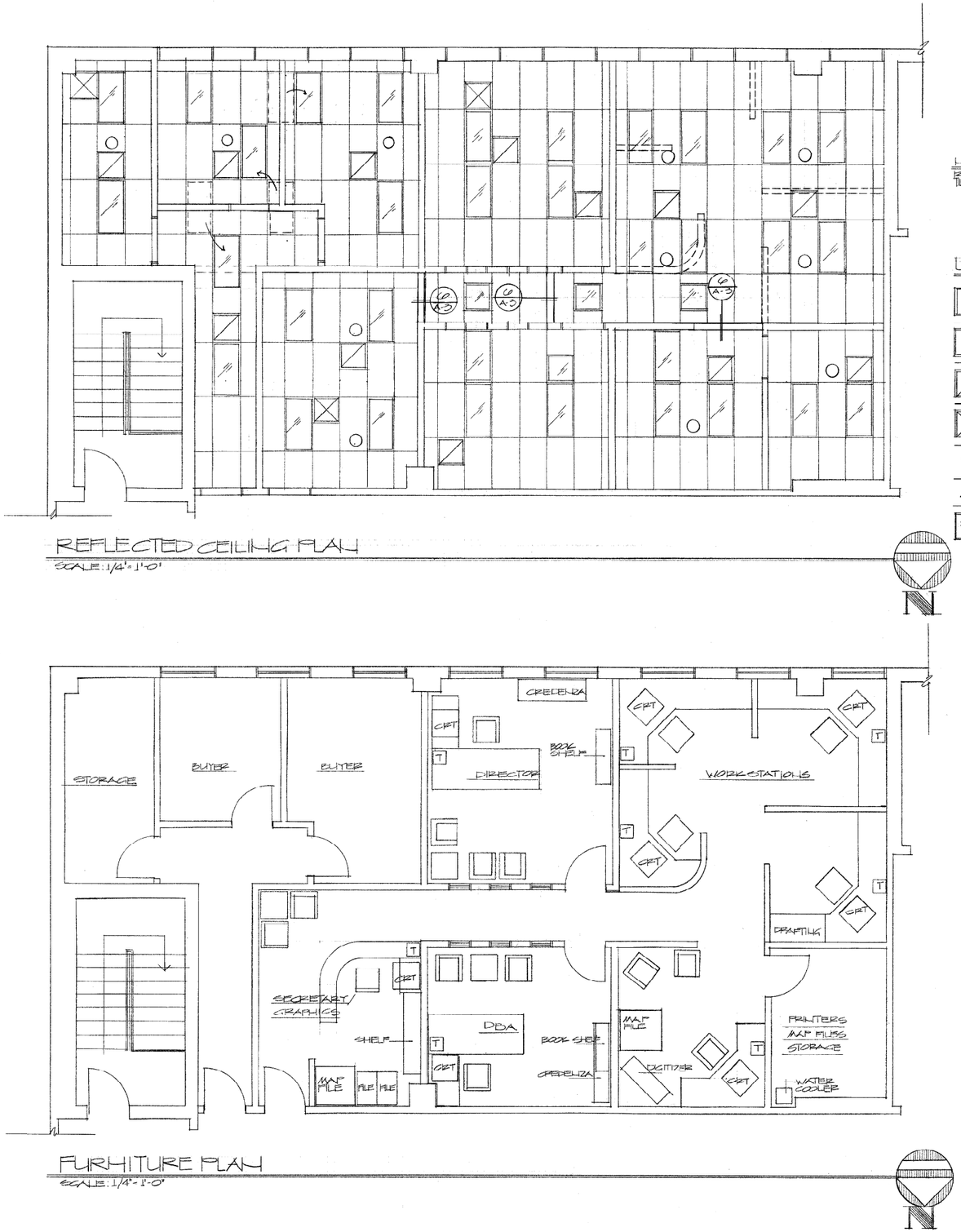

REFLECTED CEILING PLAN
SCALE: 1/4" = 1'-0"

NOTE!
REPAIR & PATCH CEILING TILES TO MATCH EXISTING.

LEGEND

	2x4 FLUORESCENT LIGHT FIXTURE (EXISTING)
	2x2 FLUORESCENT LIGHT FIXTURE (EXISTING)
	SUPPLY AIR (EXISTING)
	RETURN AIR (EXISTING)
	FIRE SPRINKLER (EXISTING)
	TO BE RELOCATED
	NEW 2'-0" x 2'-0" FLUORESCENT LIGHT FIXTURE

FURNITURE PLAN
SCALE: 1/4" = 1'-0"

CLARK COUNTY
General Services Department • Facilities Services Division
401 South Fourth Street • Las Vegas, Nevada 89101 • (702) 455-4616

SEPT. 89 8948
LC

REFLECTED C.G. PLAN
FURNITURE PLAN
PROPOSED G.I.S. OFFICE
10TH FLOOR BRIDGE BLDG.

A-4

4
1609