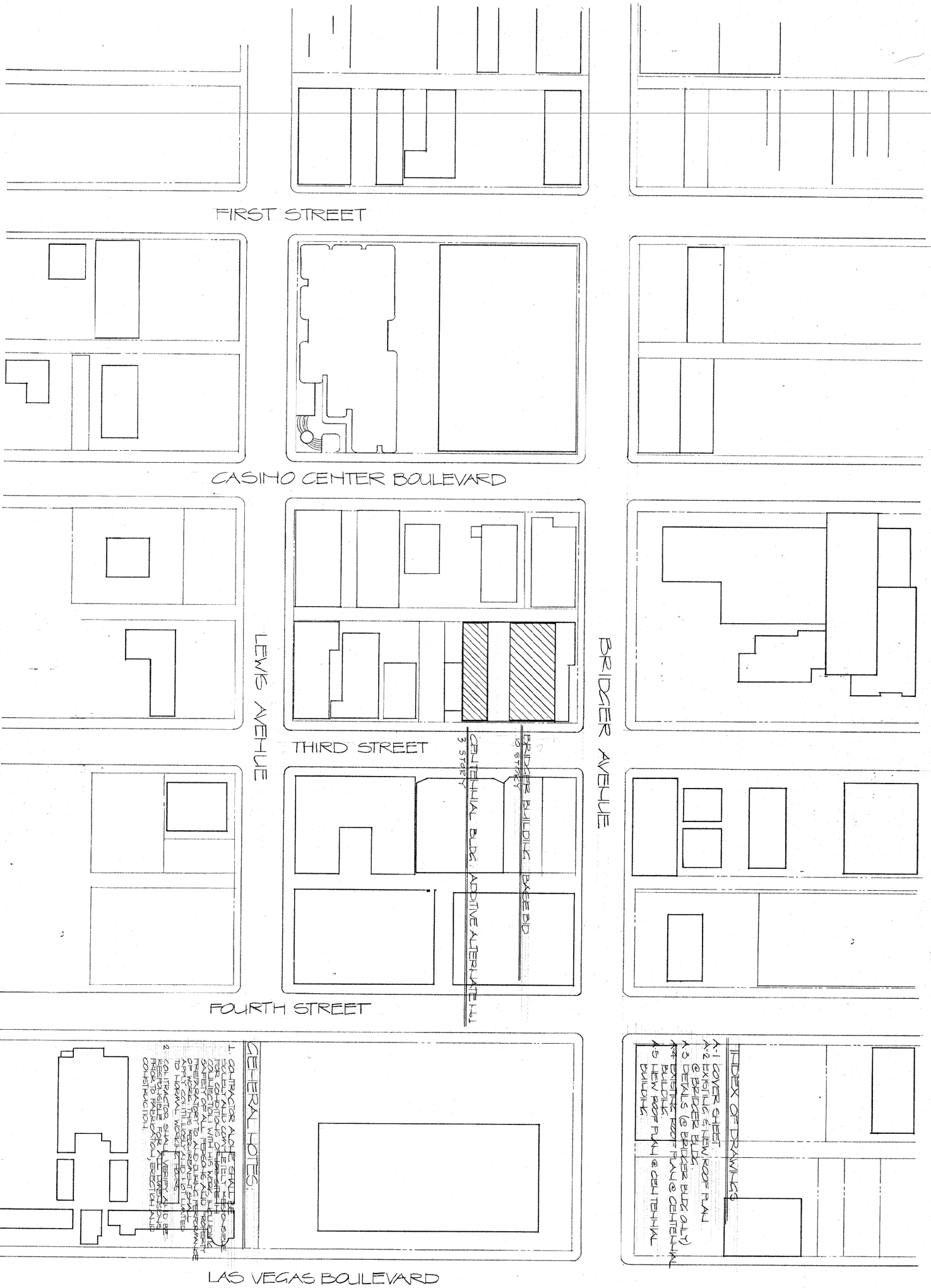

SHEET TITLE: COVER SHEET
DATE:
PROJECT NO. 9010
DRAWN BY: LC
APPROVED BY:
PROJECT: BRIDGER BUILDING RE-ROOFING.

SHEET NO. A-1 OF 5

1609

CLARK COUNTY
General Services Department • Facilities Services Division
401 South Fourth Street • Las Vegas, Nevada 89101 • (702) 455-4616

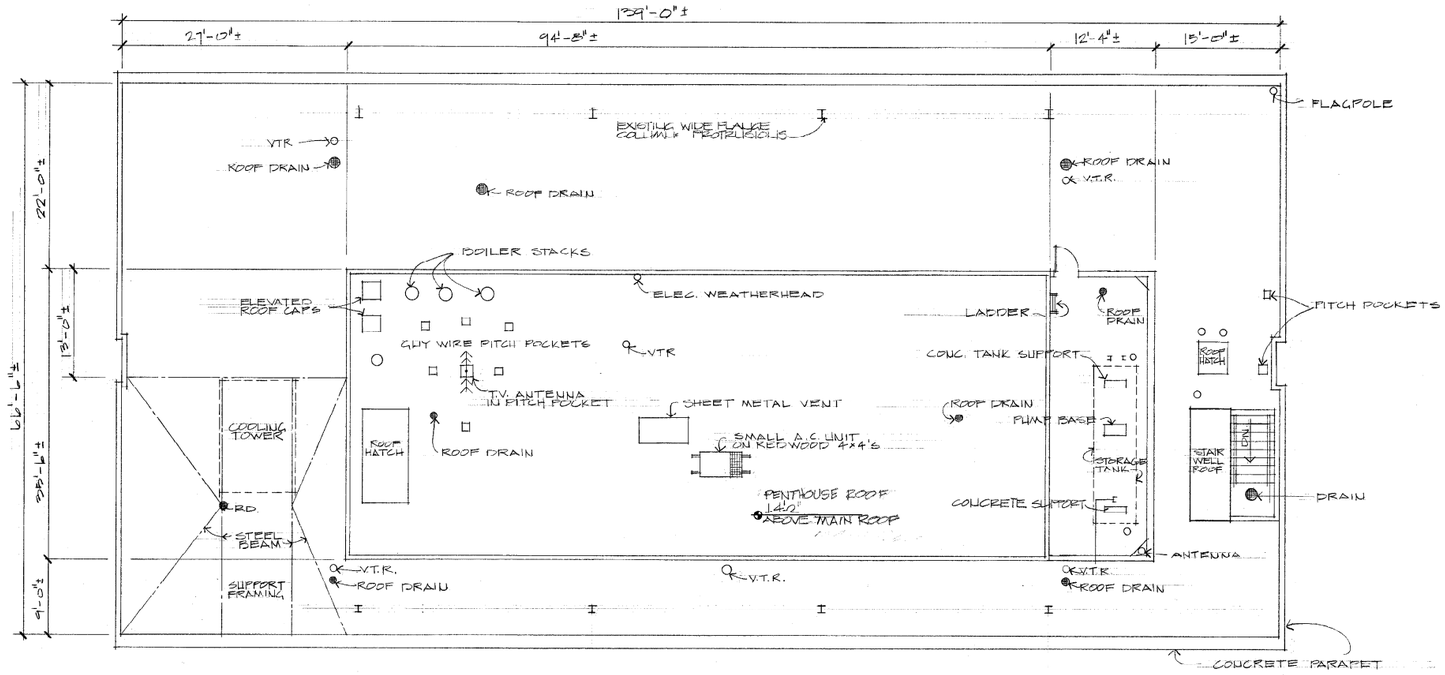

EXISTING ROOF PLAN

SCALE: 1/8" = 1'-0"

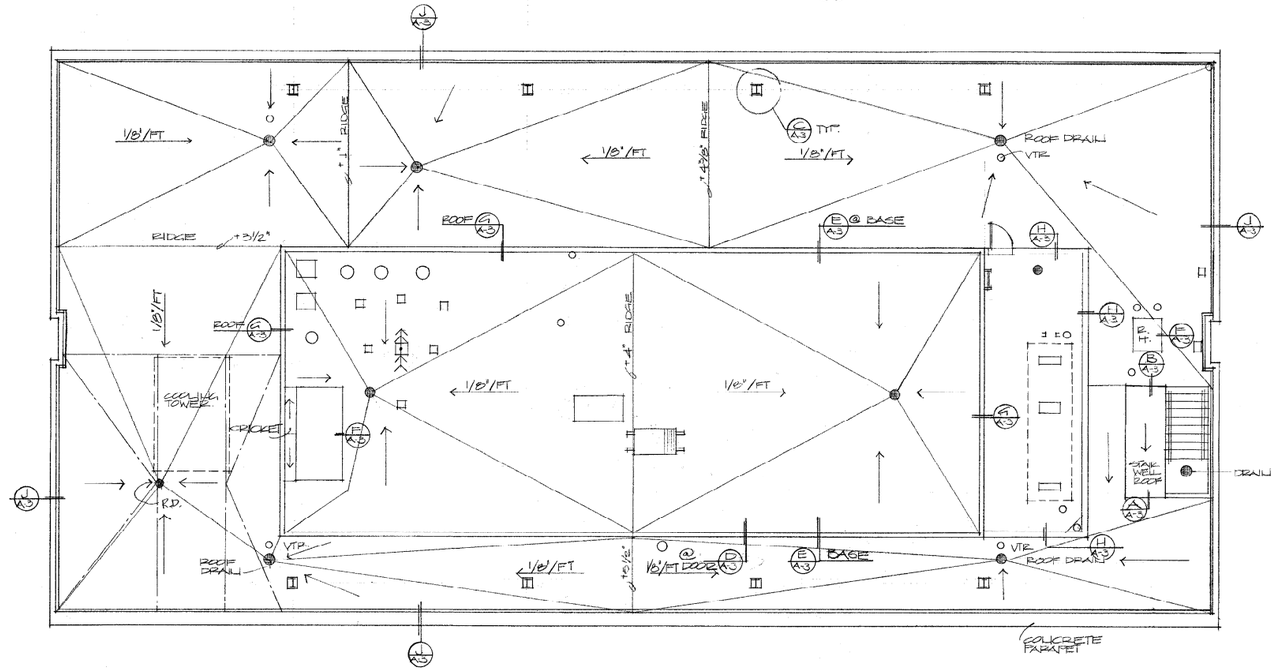

NEW ROOF PLAN

NOTES:

1. REMOVE EXISTING ROOFING, ROOF INSULATION, FASCIA & PITCH POCKET (DECK AS REQUIRED).
   REMOVE EXISTING FLASHING.
2. PROVIDE NEW RIGID INSULATION, SLOPE TO DRAIN AS SHOWN ON PLANS. PROVIDE NEW ROOFING, CANT STRIPS. PROVIDE NEW FLASHING.
3. NEW 4 PLIES, LEAD FLASHING AROUND ALL VENTS THRU ROOF.

CLARK COUNTY
General Services Department • Facilities Services Division
401 South Fourth Street • Las Vegas, Nevada 89101 • (702) 455-4616

DATE: 9/10
DRAWN BY: PH
APPROVED BY:

SHEET TITLE: EXISTING & NEW ROOF PLAN

PROJECT: BRIDGER BUILDING RE-ROOFING

SHEET NO: A-2
OF: 5
1609

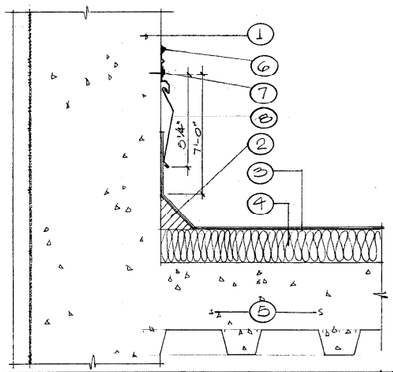

NOTES:

1. EXISTING CONCRETE PARAPET.
2. NEW 2" FIBER CANT STRIP.
3. ROOFING. SEE SPEC'S.
4. TAPERED RIGID INSUL.
5. EXISTING CONCRETE DECK.
6. SEALANT.
7. NEOPRENE S.S. WASHER.
8. 24 GA. FLASHING.

FLASHING @ PARAPET — J — SCALE: 3" = 1'-0" — DET. No. — CODE:

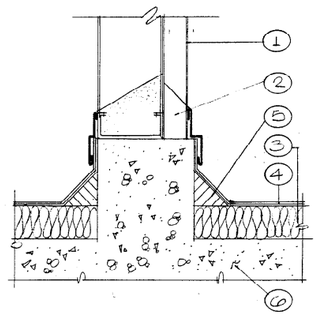

NOTES:

1. EXISTING CORRUGATED METAL SIDING.
2. FILL FLUTES WITH BREATHABLE TO 1'-0" ABOVE PARAPET CLOSE TO EXTERIOR.
3. RIGID INSULATION SLOPE TO DRAIN.
4. ROOFING. SEE SPEC'S.
5. 2" FIBER CANT STRIP.
6. EXISTING CONCRETE DECK AND CURB.

FLASHING DET. @ VERTICAL DECK — H — SCALE: 3" = 1'-0" — DET. No. — CODE:

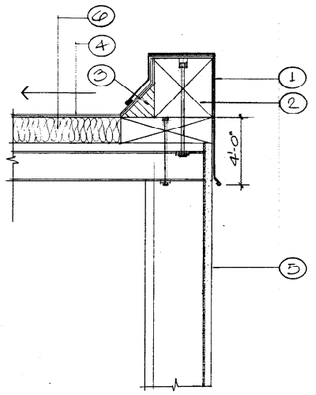

NOTES:

1. 24 GA. GALVANIZED FLASHING ANCHOR TO 2x4 EXPANSION JOINTS @ 10'-0" O.C.
2. 2 LAYERS 4x4 PRESSURED TREATED WOOD W/ 45° BEVELED TOP @ 4'-0" O.C.
3. 2" FIBER CANT STRIP.
4. ROOFING. SEE SPECS.
5. EXISTING STUCCO O/ WOOD FRAME WALL.
6. RIGID INSULATION SLOPE TO DRAIN.

FLASHING DETAIL @ PENTHOUSE — G — SCALE: 3" = 1'-0" — DET. No. — CODE:

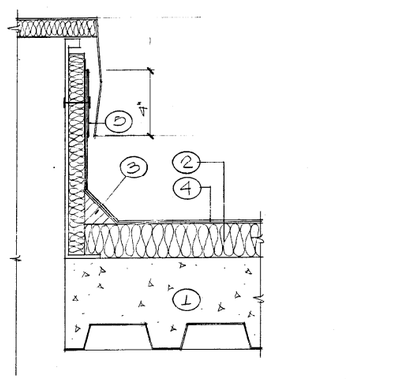

NOTES:

1. EXISTING CONCRETE DECK.
2. RIGID INSULATION SLOPE TO DRAIN.
3. 2" FIBER CANT.
4. ROOFING. SEE SPEC'S.
5. EXISTING SHEET METAL FLASHING.

FLASHING @ ROOF HATCH — F — SCALE: 3" = 1'-0" — DET. No. — CODE:

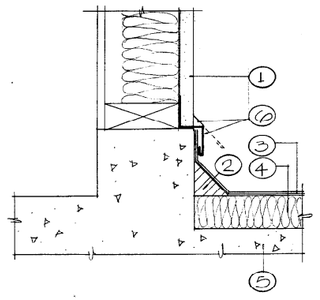

NOTES:

1. EXISTING STUCCO O/ WOOD FRAME WALL.
2. NEW 2" FIBER CANT STRIP.
3. NEW ROOFING. SEE SPECIFICATIONS.
4. NEW RIGID INSUL. SLOPE TO DRAIN.
5. EXISTING CONC. CURB AND SLAB.
6. EXISTING FLASHING TO BE LIFTED TO APPLY NEW ROOFING CUT BACK IF NEW FLASHING DOES NOT OVERLAP LAP W/ SILICONE SEALANT.

FLASHING DETAIL @ STUCCO WALL — E — SCALE: 3" = 1'-0" — DET. No. — CODE:

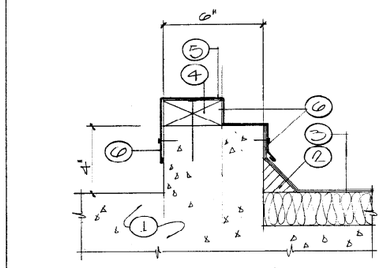

NOTES:

1. EXISTING CONCRETE CURB.
2. 2" FIBER CANT STRIP.
3. ROOFING. SEE SPEC'S.
4. SCAB 6x4 ANCHOR TO CONC CURB.
5. 20 GA. GALVANIZED FLASHING w/ 1/2" LIP.
6. ANCHOR FLASHING TO 2x4 & CONC. CURB.

CURB DETAIL @ DOORS — D — SCALE: 3" = 1'-0" — DET. No. — CODE:

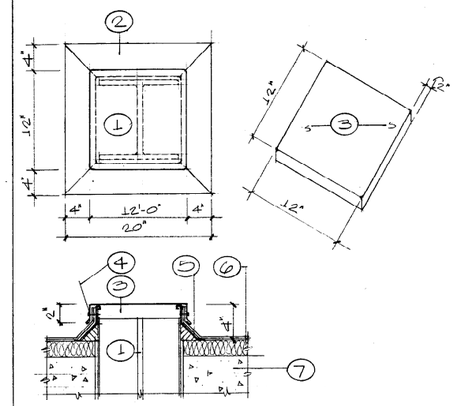

NOTES:

1. EXISTING 16" FLANGE CONC. FOOTING THRU ROOF.
2. 24 GA. FLASHING SOLDER & SEAL ALL JOINTS.
3. 20 GA. GALVANIZED COUNTER SOLDER ALL SEAL ALL JOINTS.
4. ANCHOR CAP TO FLASHING W/ SHEET METAL SCREWS W/ NEOPRENE WASHERS.
5. FIBER CANT STRIP.
6. ROOFING. SEE SPECIFICATIONS.
7. EXISTING CONCRETE DECK.

FLASHING DET. @ COL. PENETRATIONS — C — SCALE: 1 1/2" = 1'-0" — DET. No. — CODE:

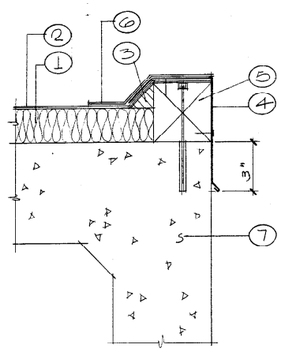

NOTES:

1. RIGID INSULATION SLOPE TO DRAIN. SEE PLAN.
2. ROOFING. SEE SPECS.
3. FIBER CANT STRIP.
4. 20 GA. EDGE FLASHING.
5. 4"x4" CONTINUOS.
6. 20 GA. COUNTER FLASHING.
7. EXISTING CONCRETE STRUCTURE TO REMAIN.

SECTION @ STAIRWELL ROOF — B — SCALE — DET. No. — CODE

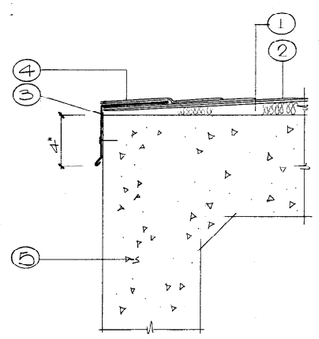

NOTES:

1. RIGID INSULATION SLOPE TO DRAIN. SEE PLAN.
2. ROOFING. SEE SPECS.
3. 20 GA. EDGE FLASHING.
4. 20 GA. COUNTER FLASHING.
5. EXISTING SCHG. STRUCTURE TO REMAIN.

SECTION @ STAIRWELL ROOF — A — SCALE: 3" = 1'-0" — DET. No. — CODE:

CLARK COUNTY
General Services Department • Facilities Services Division
401 South Fourth Street • Las Vegas, Nevada 89101 • (702) 455-4616

9/10 BY LC

DETAILS

BRIDGER BUILDING RE-ROOFING

SHEET NO. A1-3

5
1609

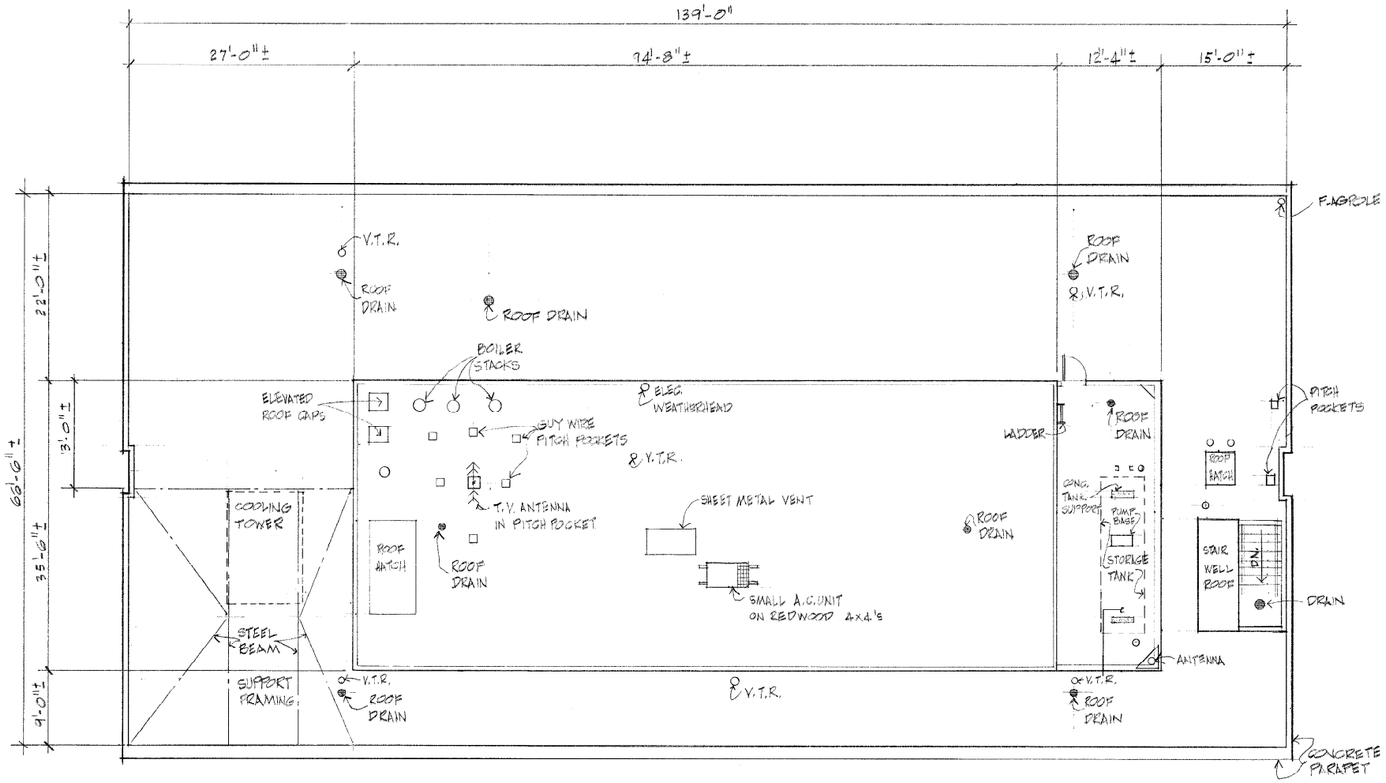

EXISTING ROOF PLAN

SCALE: 1/8" = 1'-0"

N

CLARK COUNTY

General Services Department • Facilities Services Division

401 South Fourth Street • Las Vegas, Nevada 89101 • (702) 455-4616

SHEET NO.

OF

1609

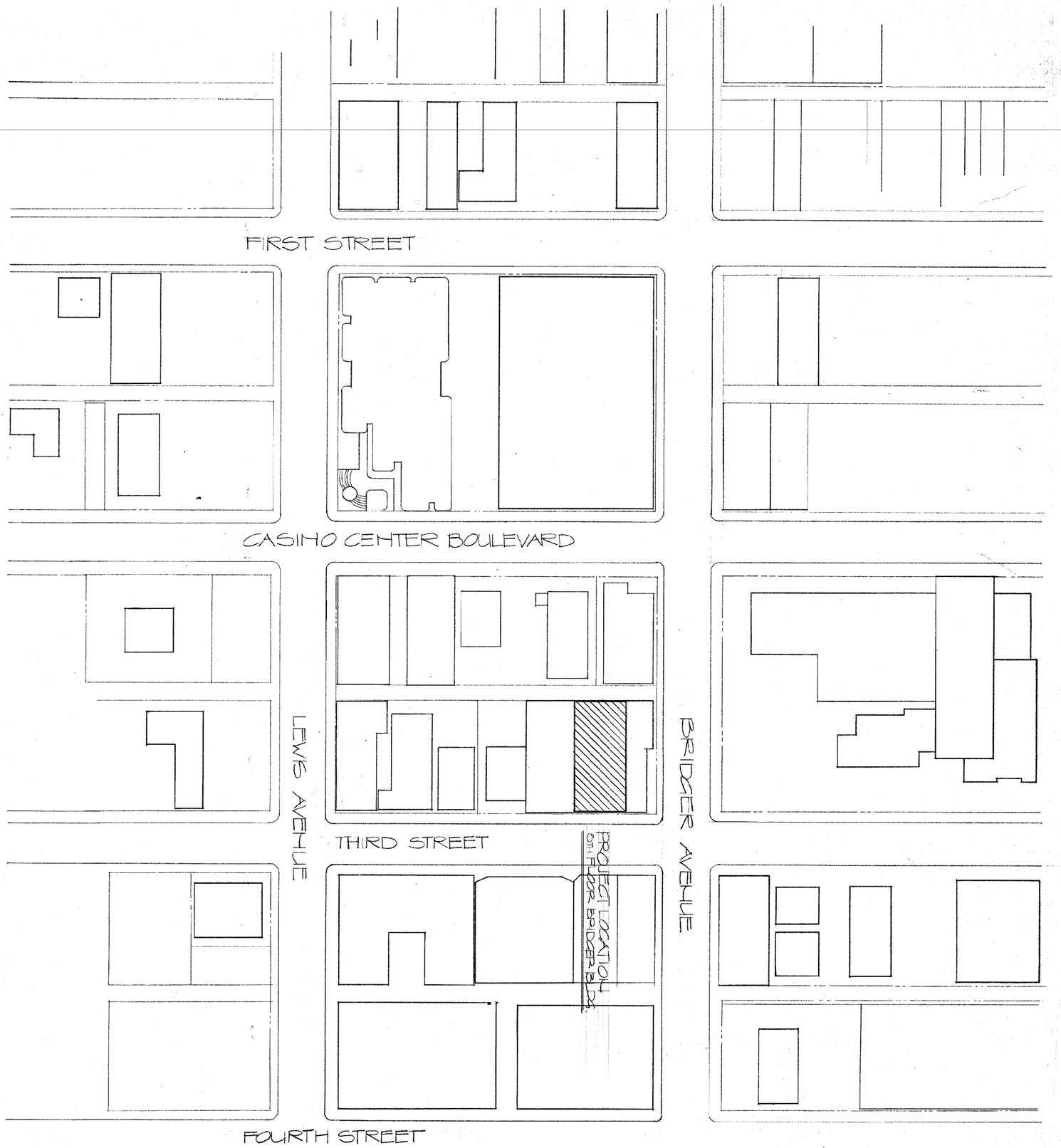

SHEET TITLE: COVER SHEET

PROJECT: FIFTH FLOOR REMODELING

DATE: NOV. 28 '90

PROJECT NO. 7030

DRAWN BY: LC

APPROVED BY:

SHEET NO. 1 OF 3

4609

CLARK COUNTY

General Services Department • Facilities Services Division

401 South Fourth Street • Las Vegas, Nevada 89101 • (702) 455-4616

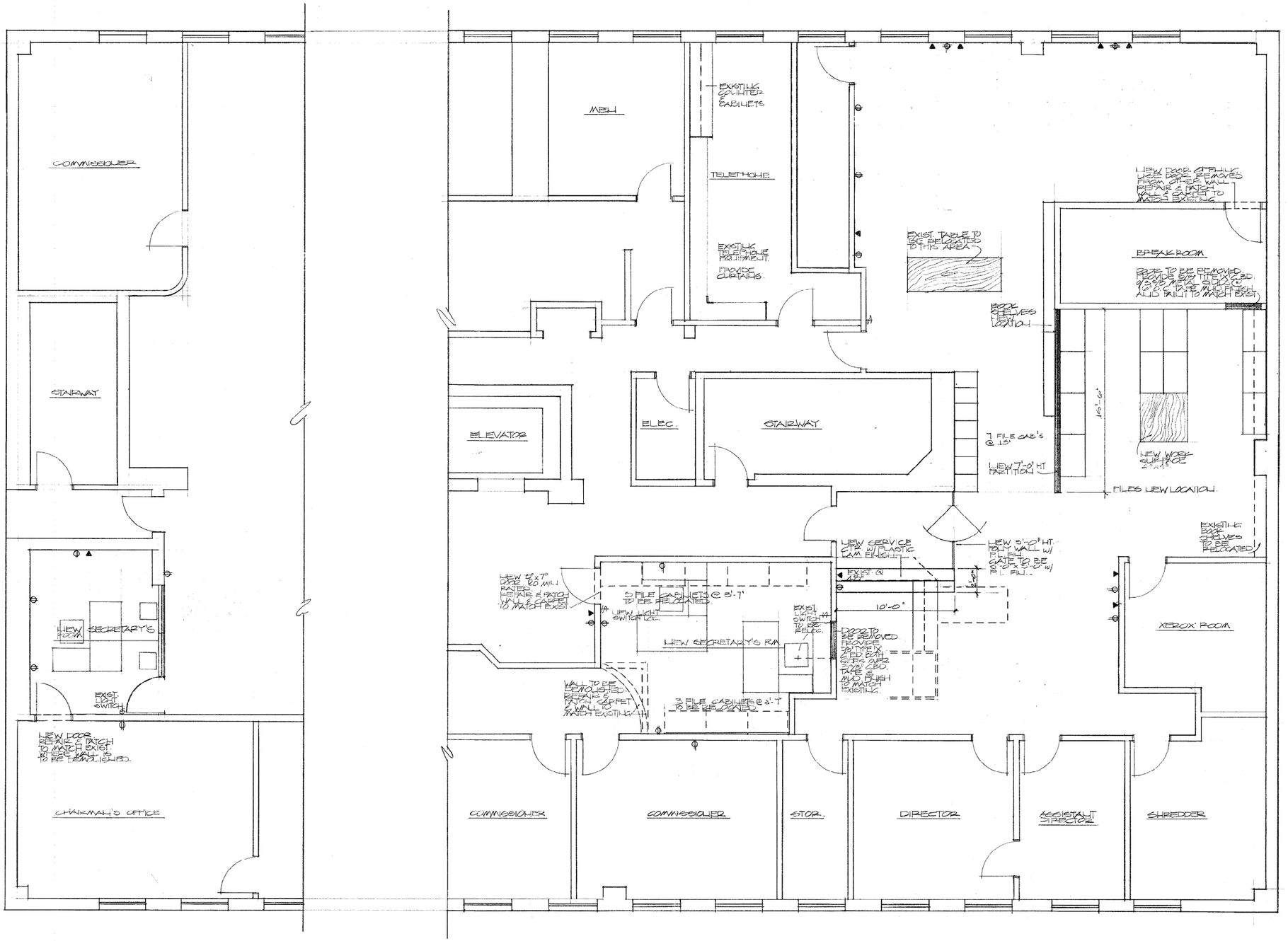

MODIFIED FIFTH FLOOR PLAN (PARTIAL)

SCALE: 1/4" = 1'-0"

N

LEGEND

- DUPLEX RECEPTACLE
- FOURPLEX RECEPTACLE
- LIGHT SWITCH
- TELETHONE JACK

CLARK COUNTY

General Services Department • Facilities Services Division

401 South Fourth Street • Las Vegas, Nevada 89101 • (702) 455-4616

OFFICE OF THE COUNTY CLERK

FIFTH FLOOR REMODELING

600 EASTERN AVE. LAS VEGAS, NV 89158

NOV-28-90 | 90-30 | LC

SHEET NO. 3

3

1609

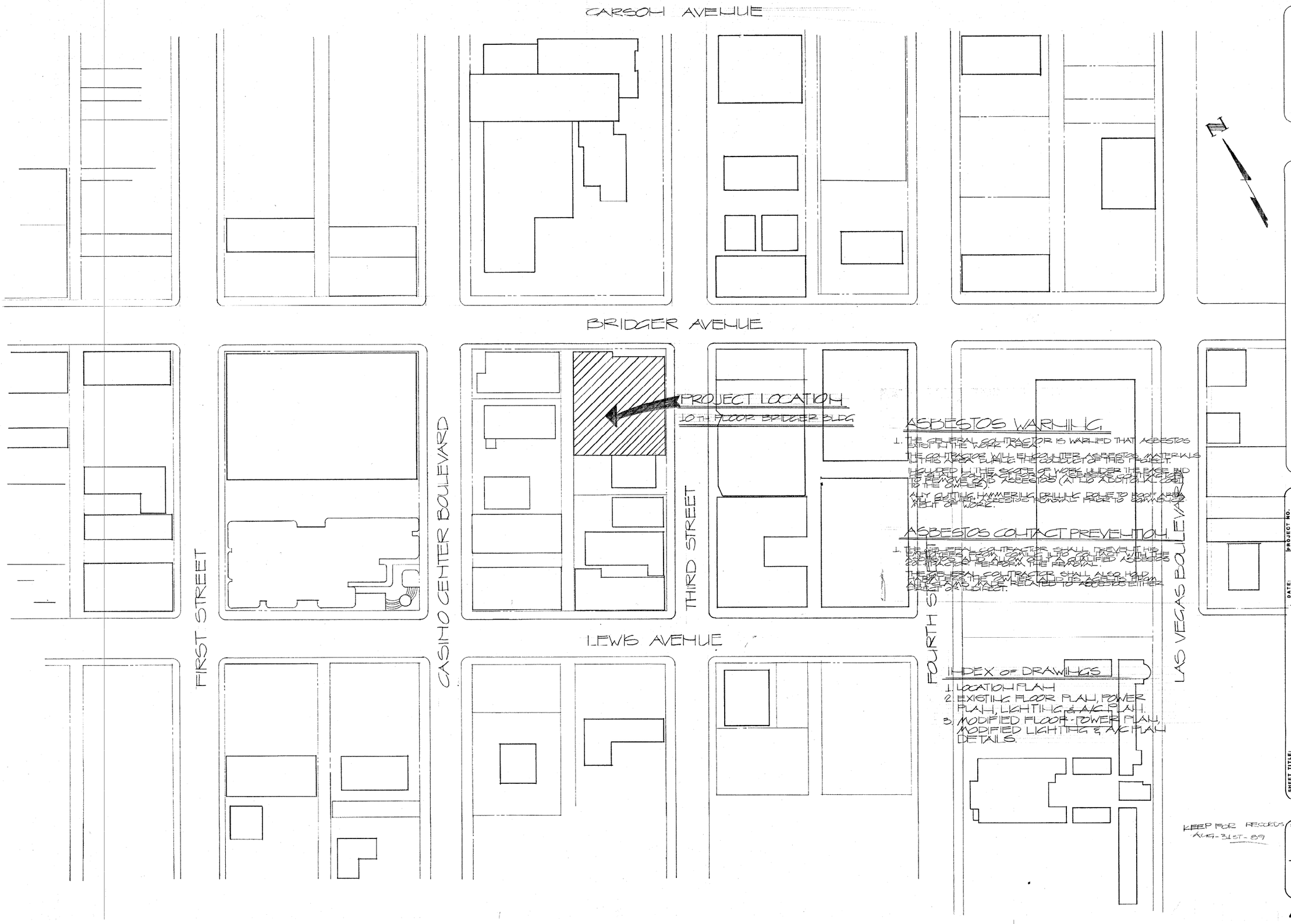

ASBESTOS WARNING

1. THE GENERAL CONTRACTOR IS WARNED THAT ASBESTOS EXIST IN THE WORK AREA.

THE CONTRACTOR WILL ENCOUNTER ASBESTOS MATERIALS IN THIS AREA DURING THE CONDUCT OF THIS PROJECT.

INCLUDED IN THE SCOPE OF WORK UNDER THE BASE BID HE SHALL CONTRACT FOR ANY ASBESTOS CONTRACTOR TO REMOVE SAID ASBESTOS (AT NO ADDITIONAL COST TO THE OWNER).

ANY CUTTING, HAMMERING, DRILLING DONE TO ROOF AREA WILL REQUIRE ASBESTOS REMOVAL PRIOR TO COMMENCEMENT OF WORK.

ASBESTOS CONTACT PREVENTION

1. THE GENERAL CONTRACTOR SHALL PREVENT HIS EMPLOYEES FROM COMING INTO CONTACT WITH THE ASBESTOS AND ALLOW ONLY A QUALIFIED ASBESTOS CONTRACTOR PERFORM THE REMOVAL.

THE GENERAL CONTRACTOR SHALL ALSO HOLD HARMLESS THE OWNER AND ITS AGENTS FROM ANY CLAIMS MADE RELATED TO ASBESTOS EITHER DIRECT OR INDIRECT.

INDEX OF DRAWINGS

1. LOCATION PLAN
2. EXISTING FLOOR PLAN, POWER PLAN, LIGHTING & A/C PLAN.
3. MODIFIED FLOOR-POWER PLAN, MODIFIED LIGHTING & A/C PLAN DETAILS.

KEEP FOR RECORDS
AUG-31ST-89

CLARK COUNTY
General Services Department • Facilities Services Division
401 South Fourth Street • Las Vegas, Nevada 89101 • (702) 455-4616

DATE: JUNE-89
PROJECT NO.
DRAWN BY: LC
APPROVED BY:

SHEET TITLE: LOCATION PLAN
PROJECT: 10TH FLOOR REMODEL @ INTERNAL AUDIT OFFICES

SHEET NO. 1 OF 3

1609

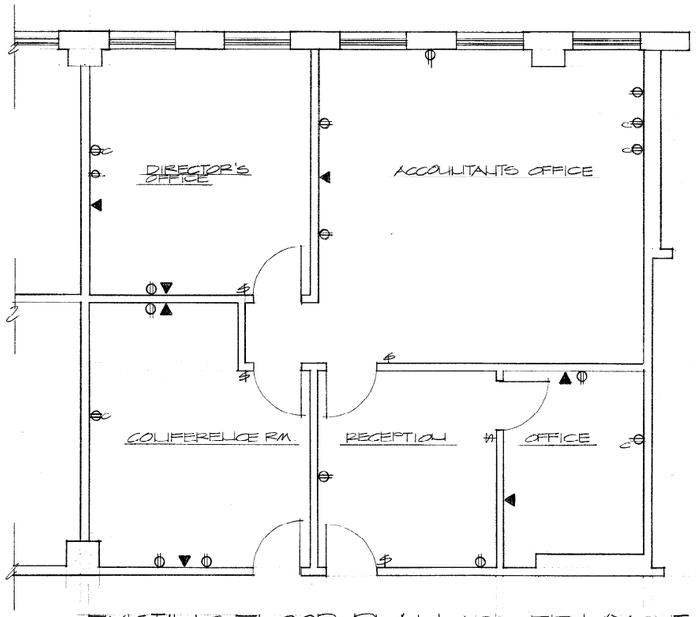

LEGEND

⊕	DUPLEX RECEPTACLE
⊕C	COMPUTER OUTLET
▲	TELEPHONE JACK
$	SWITCH

EXISTING FLOOR PLAN & POWER LAY-OUT

SCALE: 1/4" = 1'-0"

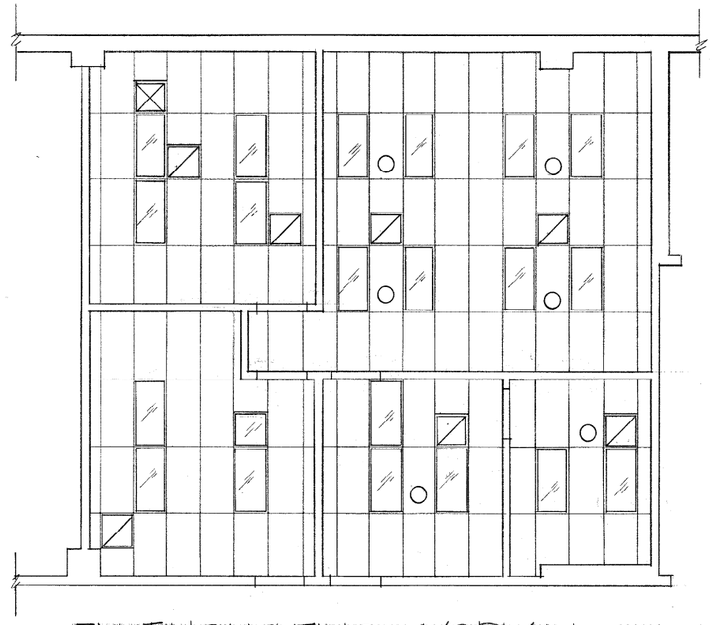

LEGEND

	2x4 FLUORESCENT LIGHT FIXTURE
	2x2 FLUORESCENT LIGHT FIXTURE
	FIRE SPRINKLER
	SUPPLY AIR
	RETURN AIR

EXISTING LIGHTING & A/C PLAN

SCALE: 1/4" = 1'-0"

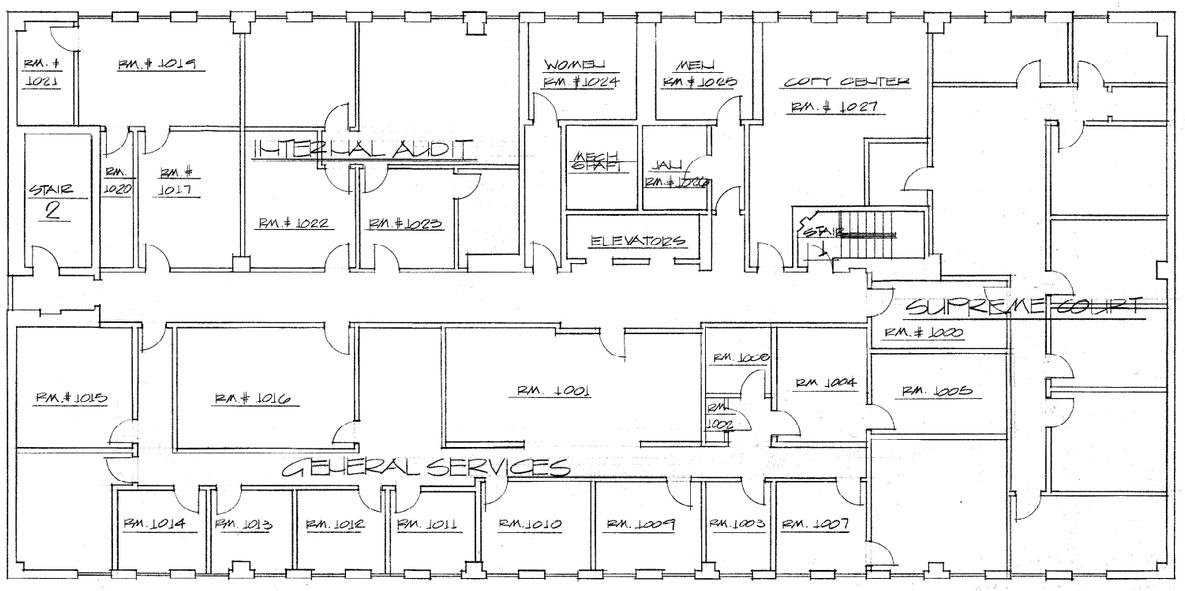

FLOOR PLAN

SCALE: 1/8" = 1'-0"

LEGEND

	EXISTING TO REMAIN
	TO BE DEMOLISHED
	NEW CONSTRUCTION
	AREA OF PROJECT

KEEP FOR RECORDS
AUG - 31 ST - 89

CLARK COUNTY
General Services Department • Facilities Services Division
401 South Fourth Street • Las Vegas, Nevada 89101 • (702) 455-4616

DATE: AUG, 89
DRAWN BY: LC

EXISTING FLOOR PLAN, POWER, LIGHTING & A/C PLAN

10TH FLOOR REMODEL @ INTERNAL AUDIT OFFICES

SHEET NO. 2 OF 3

1609

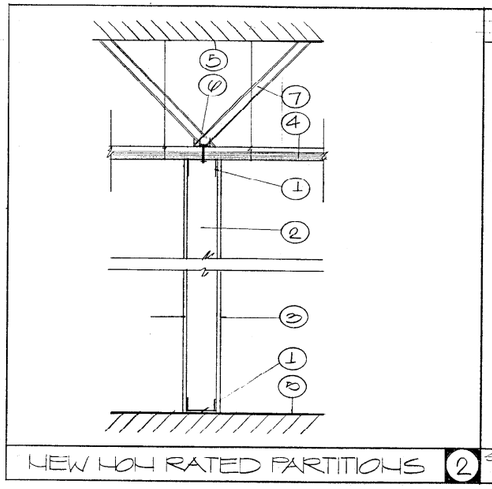

NEW NON RATED PARTITIONS (2)

NOTES

1. 3 5/8" STUD RUNNER
2. 3 5/8" METAL STUDS @ 16" O.C.
3. 5/8" GYP. BOARD TYPE 'X'
4. EXISTING SUSPENDED CEILING.
5. EXISTING CONC. SLAB
6. 1 1/2" METAL CHANNEL ATTACHED TO CEILING & STUD RUNNER.
7. 1 1/2" METAL CHANNEL @ 48" O.C. OPPOSITE DIRECTION.

SCALE: 1 1/2" = 1'-0" | DET. No. | CODE:

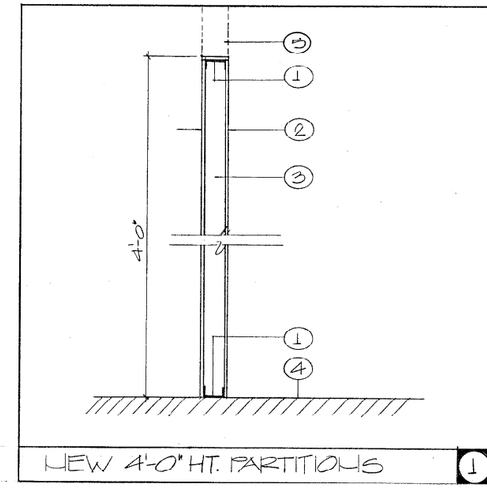

NEW 4'-0" HT. PARTITIONS (1)

NOTES:

1. 3 5/8" METAL STUD RUNNER.
2. 5/8" TYPE 'X' GYPSUM BOARD BOTH SIDES
3. 3 5/8" METAL STUDS @ 16" O.C.
4. EXISTING CONC. SLAB.
5. PROVIDE BACK TO BACK METAL STUDS WRAPPED W/ 5/8" G.B.D. TO CEILING & ANCHOR AS PER DET. No. 2 THESE ARE TO BE @ ENDS AS SHOWN ON PLANS.

SCALE: 1" = 1'-0" | DET. No. | CODE:

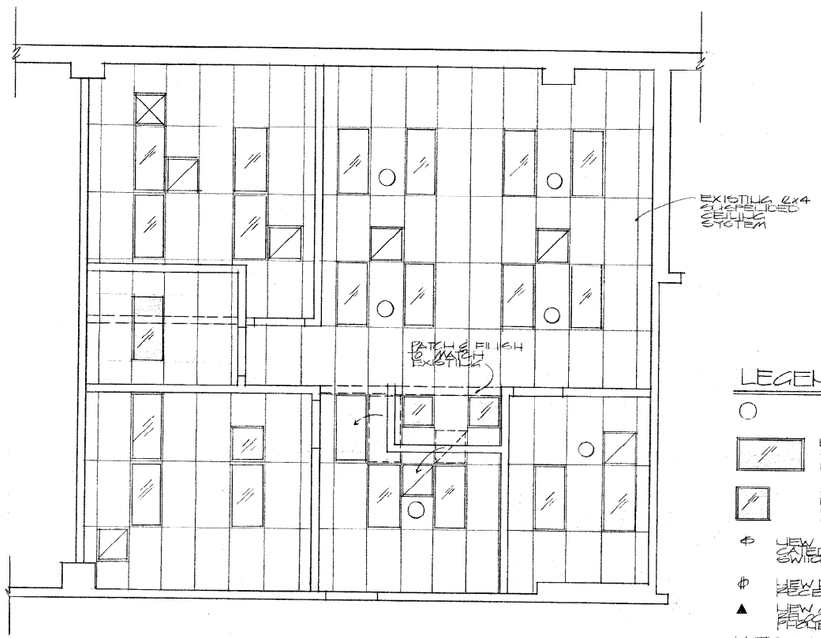

MODIFIED LIGHTING & A/C PLAN

SCALE: 1/4" = 1'-0"

LEGEND

- EXISTING FIRE SPRINK.
- NEW 2x4 FLUORESCENT LAMP TO MATCH EXISTING
- NEW 2x2 FLUORESCENT LAMP TO MATCH EXISTING
- NEW OR RELOCATED LIGHT SWITCH
- NEW DUPLEX RECEPTACLE
- NEW OR RELOCATED PHONE JACK

NOTE: COORDINATE W/ EXISTING POWER PLANS.

- EXISTING TO REMAIN
- TO BE DEMOLISHED
- NEW CONSTRUCTION
- EXISTING 2x4 RECESSED FLUORESCENT LAMP
- EXISTING 2x2 RECESSED FLUORESCENT LAMP
- EXISTING SUPPLY AIR
- EXISTING RETURN AIR
- TO BE RELOCATED AS INDICATED

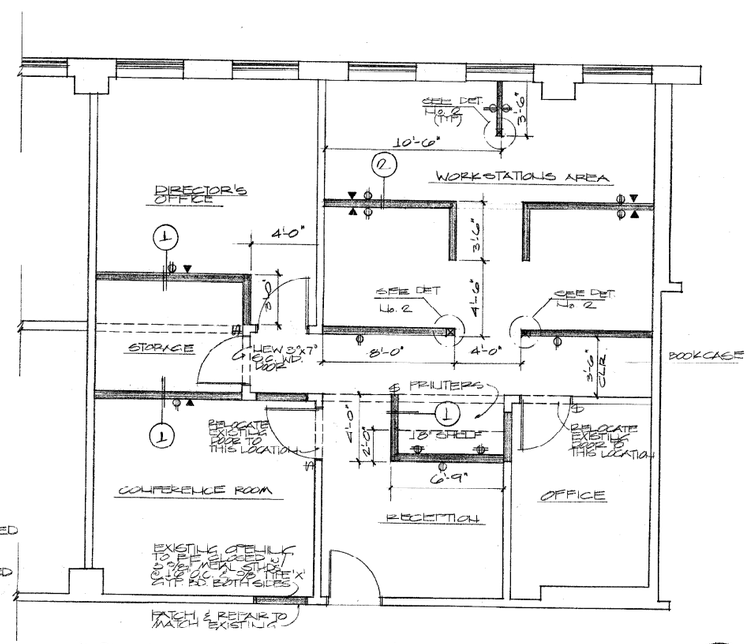

MODIFIED FLOOR PLAN & POWER PLAN

SCALE: 1/4" = 1'-0"

CLARK COUNTY

General Services Department • Facilities Services Division

401 South Fourth Street • Las Vegas, Nevada 89101 • (702) 455-4616

SHEET TITLE: MODIFIED FLOOR PLAN POWER PLAN, LIGHTING & A/C PLAN DETAILS

PROJECT: 10TH FLOOR REMODEL @ INTERNAL AUDIT

DATE: AUG. 89 | PROJECT NO. 1-2

DRAWN BY: LC

APPROVED BY:

SHEET NO. 3 OF 3

1609

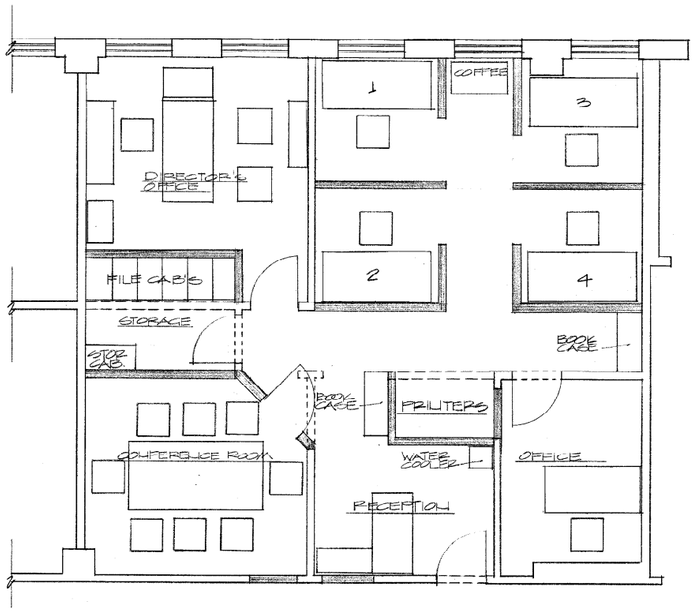

ALTERNATIVE 1

SCALE: 1/4" = 1'-0"

LEGEND

EXISTING TO REMAIN

TO BE DEMOLISHED

NEW CONSTRUCTION

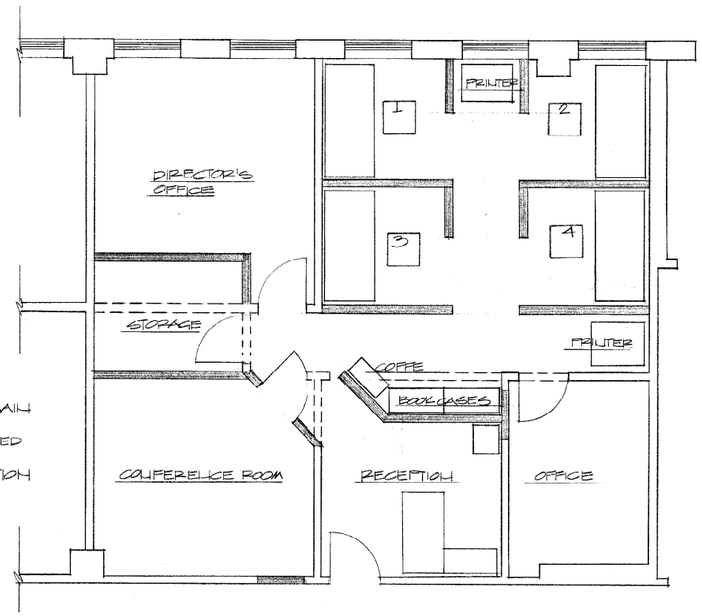

ALTERNATIVE 2

SCALE: 1/4" = 1'-0"

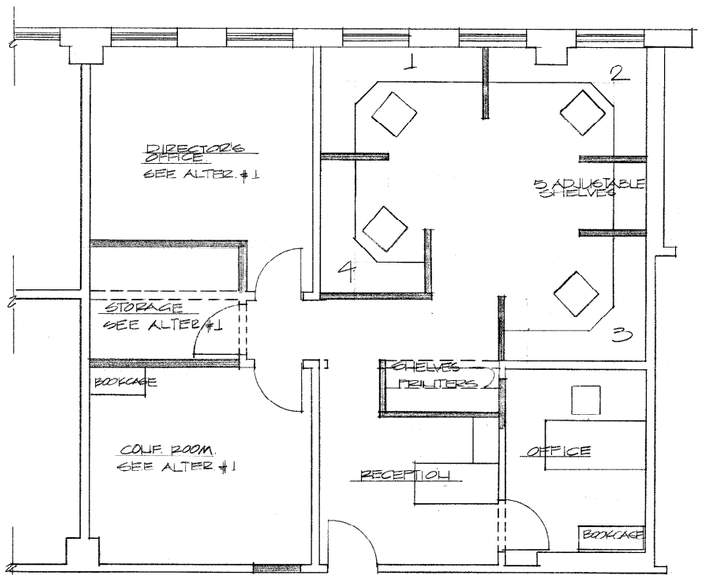

ALTERNATIVE 3

SCALE: 1/4" = 1'-0"

NOTE! IN THIS ALTERNATIVE WE ARE PROPOSING BUILT-IN WORK SURFACES

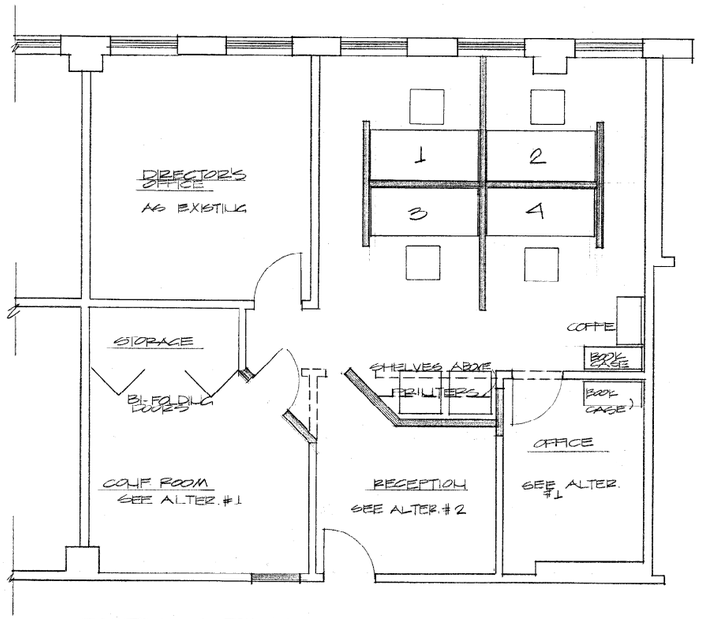

ALTERNATIVE 4

SCALE: 1/4" = 1'-0"

CLARK COUNTY

General Services Department • Facilities Services Division

401 South Fourth Street • Las Vegas, Nevada 89101 • (702) 455-4616

SHEET TITLE: ALTERNATIVES 1-4

PROJECT: 10TH FLOOR REMODEL @ INTERNAL AUDIT OFFICES

DATE: JUNE 89

PROJECT NO.

DRAWN BY: LC

APPROVED BY:

SHEET NO. 3

OF 4

1609

ALTERNATIVE 5

SCALE: 1/4"=1'-0"

LEGEND

EXISTING TO REMAIN

TO BE DEMOLISHED

NEW CONSTRUCTION

CLARK COUNTY
General Services Department • Facilities Services Division
401 South Fourth Street • Las Vegas, Nevada 89101 • (702) 455-4616

DATE: 8/97 LC

ALTERNATIVE #5

10TH FLOOR REMODEL @ INTERNAL AUDIT OFFICES

4
4
1609

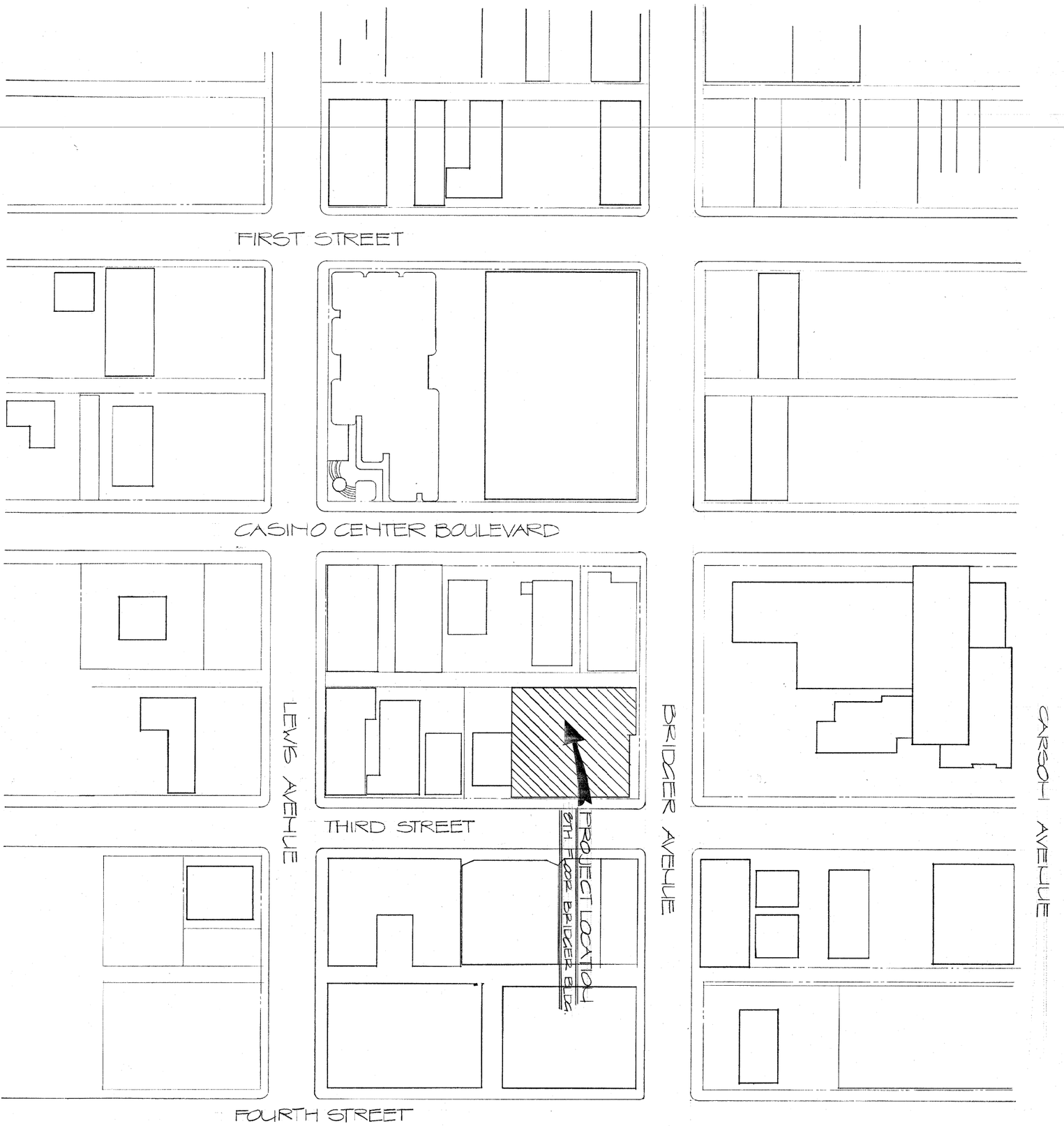

SHEET NO. 1 OF 1

SHEET TITLE: LOCATION PLAN

PROJECT: 8TH FLOOR REMODEL

DATE: JUNE-89 PROJECT NO. 1609

DRAWN BY: LC

APPROVED BY:

CLARK COUNTY

General Services Department • Facilities Services Division

401 South Fourth Street • Las Vegas, Nevada 89101 • (702) 455-4616

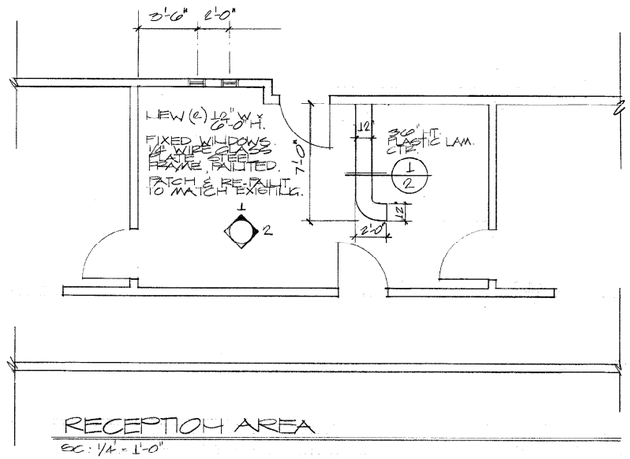

RECEPTION AREA
SC: 1/4" = 1'-0"

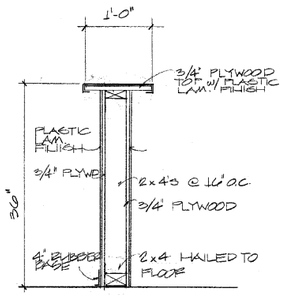

DETAIL 1
SC: 1" = 1'-0"

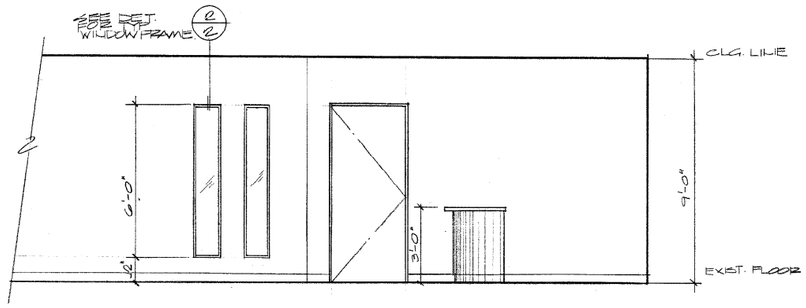

INTERIOR ELEV. 1
SC: 3/8" = 1'-0"

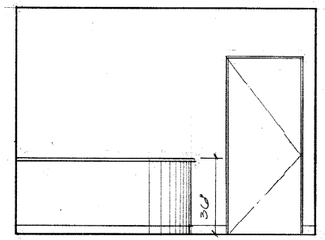

INT. ELEV. 2
SC: 3/8" = 1'-0"

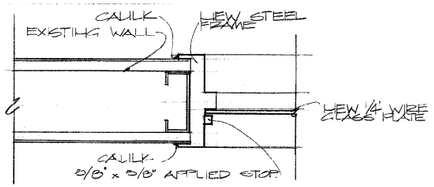

DETAIL 2 (TYP. FOR HEAD SILL & JAMES)
SC: 3" = 1'-0"

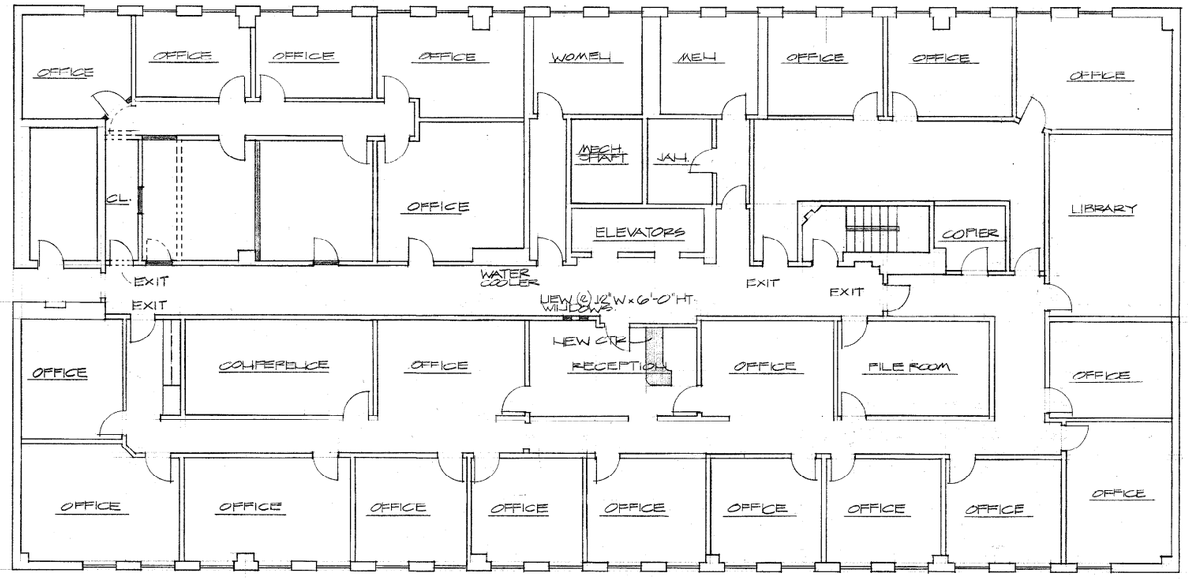

FLOOR PLAN
SCALE: 1/8" = 1'-0"

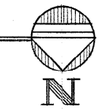

LEGEND

- EXISTING TO REMAIN
- TO BE DEMOLISHED
- NEW CONSTRUCTION

CLARK COUNTY
General Services Department • Facilities Services Division
401 South Fourth Street • Las Vegas, Nevada 89101 • (702) 455-4616

SHEET TITLE: FLOOR PLAN & NEW COUNTER
PROJECT: 8TH. FLOOR REMODEL
DATE: JUNE-89
DRAWN BY: LC
SHEET NO. 2
OF 3
1609

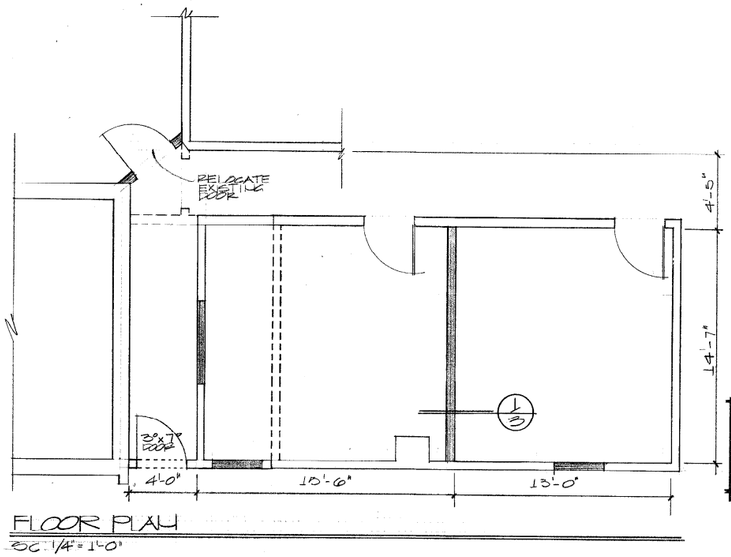

FLOOR PLAN
SC: 1/4" = 1'-0"

LEGEND

- EXISTING TO REMAIN
- TO BE DEMOLISHED
- NEW WALL. SEE DET 1/3

NOTE:
VERIFY IN FIELD THIS DIMENSIONS PRIOR COMMENCEMENT OF WORK.
REPAIR, PATCH & PAINT WALLS TO MATCH EXISTING ADJACENT WALLS

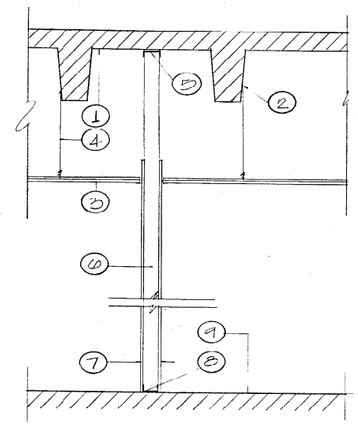

NEW NON RATED PARTITIONS

1

NOTES:

1. EXISTING STRUCTURE.
2. 3/8" Ø 2H. @ 48" O.C.
3. SUSPENDED AC. CLG.
4. WIRE HANGERS ATTACHED TO EXISTING CONCRETE.
5. 3 5/8" STEEL STUD RUNNER (CONT.)
6. 3 5/8" STEEL STUDS (25 GA.) @ 16" O.C.
7. GYPSUM BOARD BOTH SIDES.
8. 3 5/8" CONT. STEEL STUD RUNNER/SOUND TAPE.
9. EXISTING FLOOR SLAB.

SCALE 3/4" = 1'-0" | DETAIL No. | CODE 8

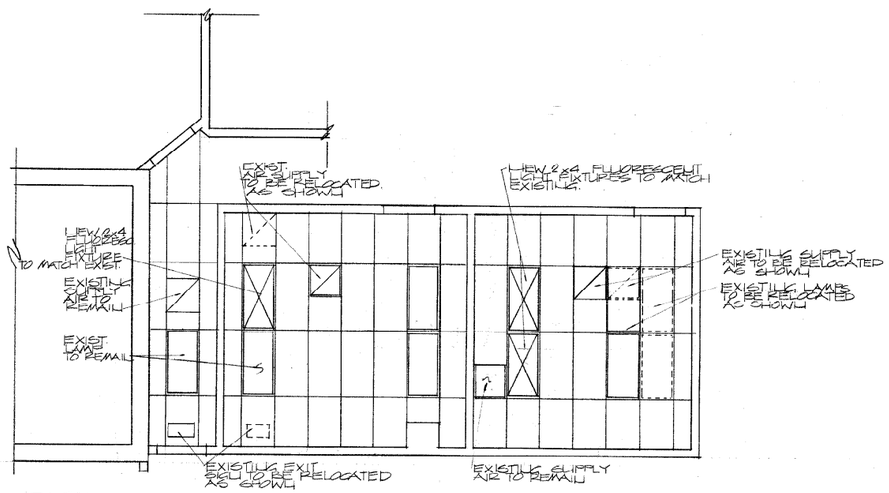

REFLECTED CLG. PLAN
SC: 1/4" = 1'-0"

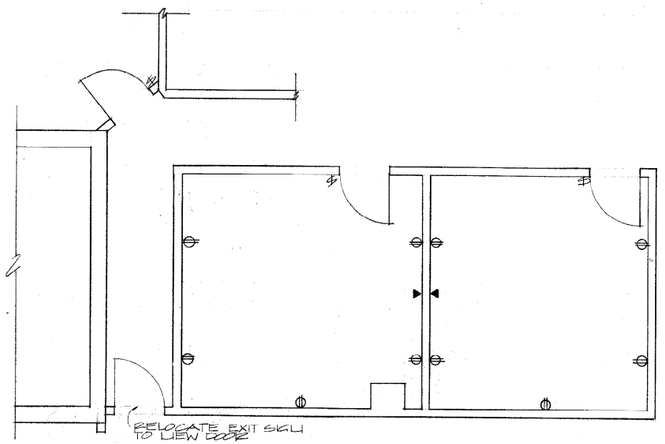

POWER PLAN
SC: 1/4" = 1'-0"

LEGEND

- ▲ TELEPHONE JACK
- ⦶ NEW DUPLEX RECEPTACLE
- $ SWITCH.

NOTE:
DISREGARD PROPOSED OUTLETS IF FALL ON EXISTING.

CLARK COUNTY
General Services Department • Facilities Services Division
401 South Fourth Street • Las Vegas, Nevada 89101 • (702) 455-4616

DATE: JUNE - 89
PROJECT NO.
DRAWN BY: L.C.
APPROVED BY:

SHEET TITLE: FLOOR PLAN, POWER PLAN, REFL. CLG. PLAN & DETAIL
PROJECT: 8TH FLOOR REMODEL

SHEET NO. 3
OF 3

1609

CLARK COUNTY

General Services Department • Facilities Services Division
401 South Fourth Street • Las Vegas, Nevada 89101 • (702) 455-4616

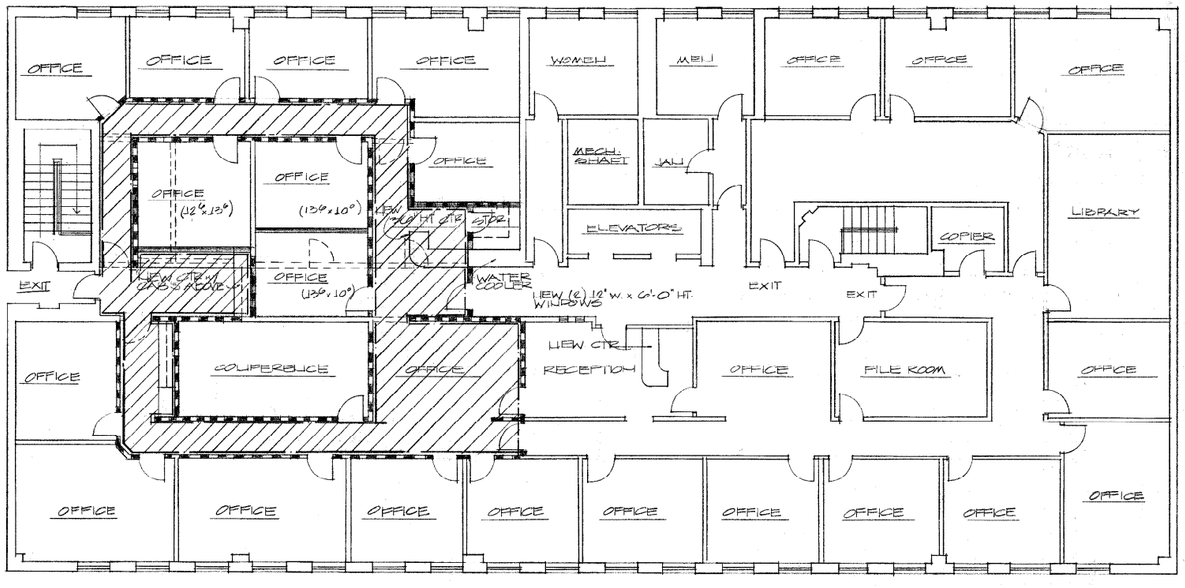

FLOOR PLAN

SCALE: 1/8"=1'-0"

N

NOTE!

1 HOUR RATED FIRE RESISTIVE WALL REQUIRES COMPLETE SEPARATION FROM FLOOR TO UNDERSIDE OF CONCRETE SLAB ABOVE.

THERE IS ALL ASBESTOS FIBER MATERIAL EXPOSED IN THE ATTIC OF THE BUILDING AND ON ALL EXPOSED (E) BLOCK WALLS THE WORK AREA WILL NEED TO BE SEALED OFF UNTIL ASBESTOS ABATEMENT UNIT REMOVES ALL THE WORK HAS BEEN FINISHED.

LEGEND

- EXISTING TO REMAIN
- TO BE DEMOLISHED
- NEW CONSTRUCTION
- 1 HR. RATED WALL TO UNDERSIDE OF CONCRETE SLAB ABOVE.
- EXIT CORRIDOR & OPEN AREAS.

NOTE!

ALL DOORS OPENING INTO CORRIDOR SHALL BE SMOKE RATED ASSEMBLY & CLOSER.

DRAWN BY: MARTIN LC
DATE: 11-12-97
PROJECT NO.

SHEET TITLE: FLOOR PLAN
PROJECT: 8TH FLOOR REMODEL

SHEET NO.
OF

1609