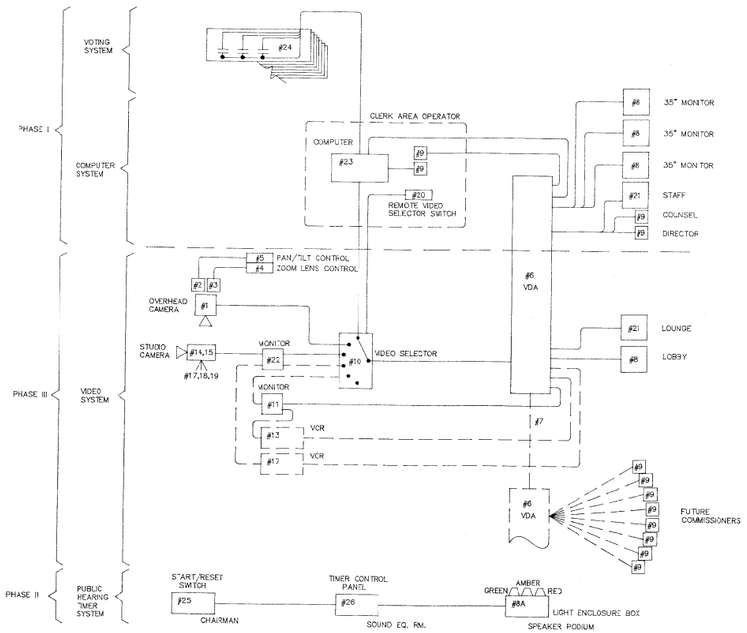

1 E-1 **SYSTEM BLOCK DIAGRAM**

NOT TO SCALE

NOTE: SEE ELECTRICAL COMMUNICATION PLAN FOR CABLE TYPE AND CONDUIT SIZE.

ELECTRICAL LEGEND

- PANEL BOARD SURFACE MOUNTED.
- PANEL BOARD FLUSH MOUNTED.
- DUPLEX RECEPTACLE 12" AFF UNLESS NOTED OTHERWISE.
- QUADRUPLEX RECEPTACLE 12" AFF UNO.
- EXISTING FLOOR MOUNTED DUPLEX RECEPTACLE.
- BRANCH CIRCUIT CONSISTING OF 2 #12 IN MINIMUM SIZE CONDUIT NOT INCLUDING GROUND WIRE.
- HOME RUN TO PANELBOARD OR DEVICE – NUMBER OF ARROWHEADS INDICATES NUMBER OF CIRCUITS.
- EXISTING UNDER GROUND CONDUIT.
- JUNCTION BOX (USED FOR CLARITY ONLY)
- # RELAY OR CONTROL DEVICE. NUMBER REPRESENTS DEVICE FUNCTION NUMBER.

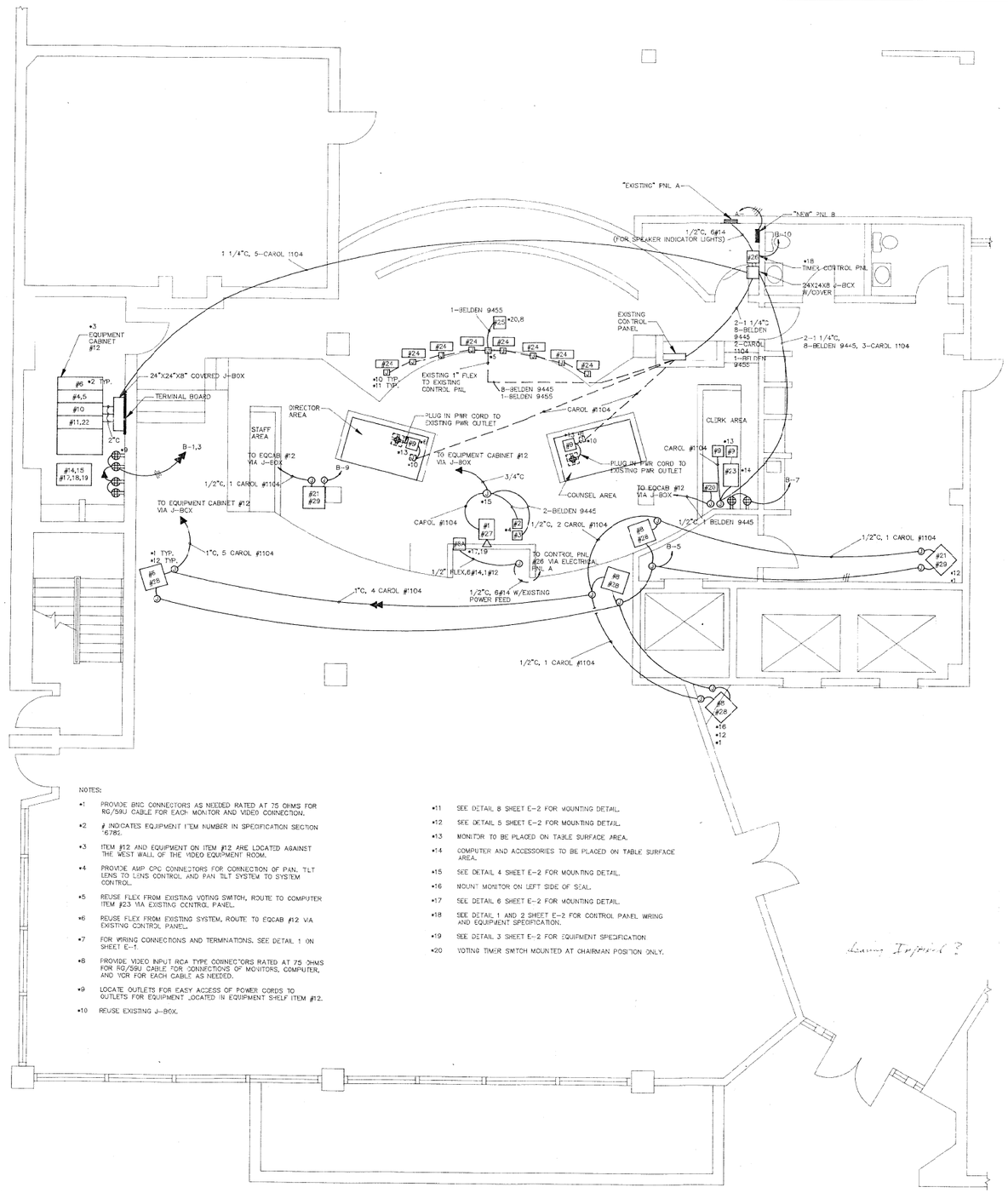

NOTES:

- *1 PROVIDE BNC CONNECTORS AS NEEDED RATED AT 75 OHMS FOR RG/59U CABLE FOR EACH MONITOR AND VIDEO CONNECTION.
- *2 # INDICATES EQUIPMENT ITEM NUMBER IN SPECIFICATION SECTION 16785.
- *3 ITEM #12 AND EQUIPMENT ON ITEM #12 ARE LOCATED AGAINST THE WEST WALL OF THE VIDEO EQUIPMENT ROOM.
- *4 PROVIDE AMP CPC CONNECTORS FOR CONNECTION OF PAN, TILT LENS TO LENS CONTROL AND PAN TILT SYSTEM TO SYSTEM CONTROL.
- *5 REUSE FLEX FROM EXISTING VOTING SWITCH, ROUTE TO COMPUTER ITEM #23 VIA EXISTING CONTROL PANEL.
- *6 REUSE FLEX FROM EXISTING SYSTEM, ROUTE TO EQCAB #12 VIA EXISTING CONTROL PANEL.
- *7 FOR WIRING CONNECTIONS AND TERMINATIONS, SEE DETAIL 1 ON SHEET E-1.
- *8 PROVIDE VIDEO INPUT RCA TYPE CONNECTORS RATED AT 75 OHMS FOR RG/59U CABLE FOR CONNECTIONS OF MONITORS, COMPUTER, AND VCR FOR EACH CABLE AS NEEDED.
- *9 LOCATE OUTLETS FOR EASY ACCESS OF POWER CORDS TO OUTLETS FOR EQUIPMENT LOCATED IN EQUIPMENT SHELF ITEM #12.
- *10 REUSE EXISTING J-BOX.
- *11 SEE DETAIL 8 SHEET E-2 FOR MOUNTING DETAIL.
- *12 SEE DETAIL 5 SHEET E-2 FOR MOUNTING DETAIL.
- *13 MONITOR TO BE PLACED ON TABLE SURFACE AREA.
- *14 COMPUTER AND ACCESSORIES TO BE PLACED ON TABLE SURFACE AREA.
- *15 SEE DETAIL 4 SHEET E-2 FOR MOUNTING DETAIL.
- *16 MOUNT MONITOR ON LEFT SIDE OF SEAL.
- *17 SEE DETAIL 6 SHEET E-2 FOR MOUNTING DETAIL.
- *18 SEE DETAIL 1 AND 2 SHEET E-2 FOR CONTROL PANEL WIRING AND EQUIPMENT SPECIFICATION.
- *19 SEE DETAIL 3 SHEET E-2 FOR EQUIPMENT SPECIFICATION.
- *20 VOTING TIMER SWITCH MOUNTED AT CHAIRMAN POSITION ONLY.

Comm. Imprint ?

ELECTRICAL COMMUNICATION PLAN

SCALE: 1/4"=1'-0"

REV	DATE	DESCRIPTION

TJKROB CONSULTING ENGINEERS, INC.
3784 S. VALLEY VIEW BLVD. SUITE 207
LAS VEGAS, NEVADA 89102
(702) 362-3000
ELECTRICAL ENGINEERING

SHEET TITLE: ELECTRICAL COMMUNICATION PLAN

PROJECT: CLARK COUNTY COMMISSION CHAMBERS

JOB NUMBER: 1127

DATE: 1-14-91

DRAWN BY: MZ

CHECKED BY: TOM KROB

RECOMMENDED:

DATE:

SHEET: E-1 OF: 1609

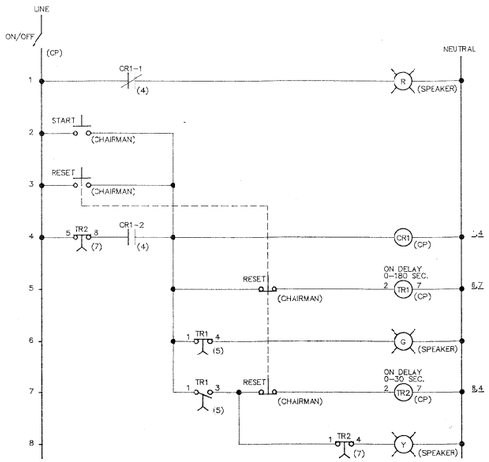

DESCRIPTION:

ON CLOSURE OF ON/OFF SWITCH RED LIGHT TURNS ON INDICATING QUIESCENT STATE. UPON MOMENTARY CLOSURE OF START SWITCH, CR1 IS ENERGIZED AND LATCHED ON THROUGH TS NORMALLY OPEN CONTACT CR1-2, RED LIGHT IS TURNED OFF THROUGH NORMALLY CLOSED CONTACT CR1-1, CLOSED CONTACT CR1-2 FEEDS POWER TO BOTH TIMER TR1 AND THE GREEN LIGHT. WHEN TR1 TIME DELAY IS COMPLETE, TR1 NORMALLY OPEN CONTACTS CLOSE AND NORMALLY CLOSED CONTACTS OPEN, TURNING OFF GREEN LIGHT, YELLOW LIGHT IS NOW ON. TIMER TR2 IS ALSO POWERED AND BEGINS TIMING. WHEN TR2 TIME DELAY S COMPLETE, TMER TR2 NORMALLY CLOSED CONTACTS OPEN AND UNLATCH CR1 RESETTING THE ENTIRE CIRCUIT. PRESS START BUTTON TO REPEAT ANOTHER CYCLE. DEPRESSING RESET ANY TME DURING TIMING SEQUENCE WILL RESET TO BEGINNING OF GREEN SEQUENCE DELAY.

1 / E-2 PUBLIC HEARING TIMER CONTROL DIAGRAM

NOT TO SCALE

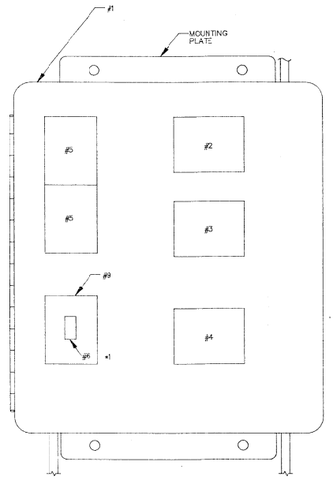

NOTES:

1. 10X8X4 CONTINUOUS HINGED COVER BOX, HOFFMAN CAT.# A-1083CH WITH PNL A-10PD.
2. CONTROL RELAY, GENERAL ELECTRIC CAT.# CR120E011115.
3. TMER #1, SOLID STATE ADVANCED CONTROLS (SSAC) CAT.# TDM120AL WITH OCTAL 8 PIN FLUSH MTD SOCKET CAT.# P1011-6.
4. TMER #2, SOLID STATE ADVANCED CONTROLS (SSAC) CAT.# TDM120AL WITH OCTAL 8 PIN FLUSH MTD SOCKET CAT.# P-101'-6.
5. TERMINAL STRIP, GENERAL ELECTRIC CAT.# CR151B6, 2EACH. (6 PT, SCREW TYPE BOTH SIDES.)
6. ON/OFF SWITCH, LIGHT SWITCH '15 VAC.
7. INDICATOR LIGHTS, ALLEN BRADLEY CAT.# 800H-PK16R, 800H-PK16G, 800H-PK16A.

8A. INDICATOR LIGHT ENCLOSURE.

9. SWITCH LIGHT BOX WITH COVER PLATE.

2 / E-2 CONTROL PANEL FOR PUBLIC HEARING TIMER

NOT TO SCALE

*1 MOUNT ON/OFF SWITCH ON ENCLOSURE HINGED DOOR.

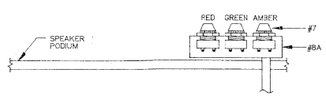

3 / E-2 PUBLIC SPEAKER TIMER INDICATOR LIGHTS

NOT TO SCALE

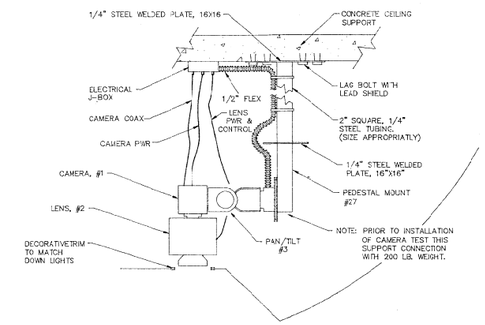

4 / E-2 OVERHEAD CAMERA MOUNTING DETAIL

NOT TO SCALE

NOTE: COORDINATE LOCATION OF CAMERA MOUNTING WITH PODIUM CAMERA DISPLAY AREA.

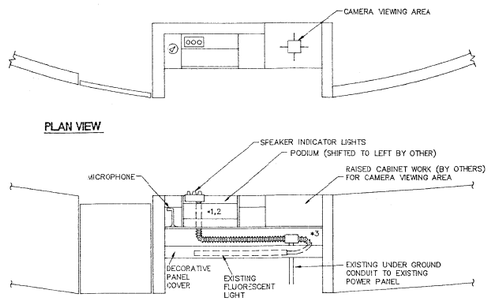

NOTES:
- *1 CONNECT INDICATOR LIGHT BOX VIA 1/2"FLEX TO EXISTING ELECTRICAL POWER J-BOX.
- *2 INSTALL 6 #14 THHN CONDUCTOR THROUGH EXISTING UNDER GROUND CONDUIT TO CONTROL PANEL. SEE DETAIL 1 FOR WIRING DIAGRAM.
- *3 PROVIDE 1#12 CU. GROUND FROM EXISTING J-BOX TC INDICATOR LIGHT ENCLOSURE.

6 / E-2 PUBLIC SPEAKER PODIUM + CAMERA VIEWING AREA

NOT TO SCALE

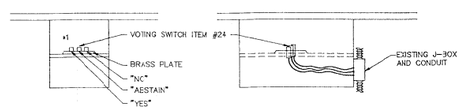

8 / E-2 COMMISSIONER VOTING SWITCH

NOT TO SCALE

NOTE: *1 ITEM #24, VOTING SWITCH, RADIO SHACK CAT. #275-609 (3 EA. PER COMMISSIONER)

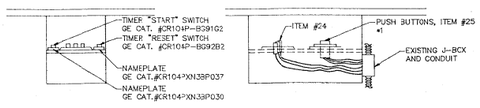

9 / E-2 COMMISSIONER VOTING AND TIMER RESET SWITCH

NOT TO SCALE

NOTE: *1 ITEM #25, TIMER START SWITCH AND TIMER RESET SWITCH (SEE DETAIL FOR CAT. #) 1 EA.

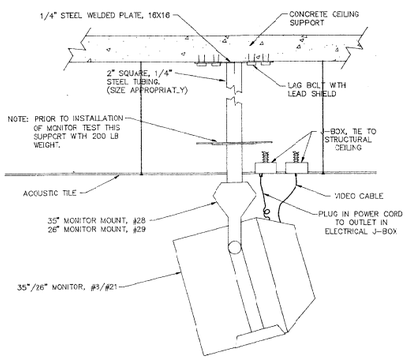

5 / E-2 CEILING MOUNTED MONITORS

NOT TO SCALE

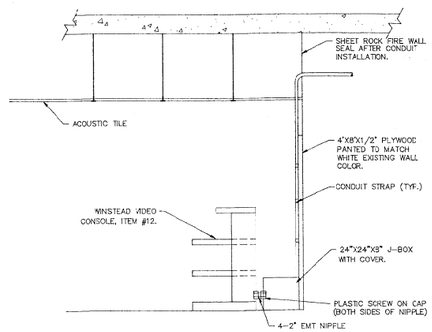

7 / E-2 VIDEO EQUIPMENT ROOM

NOT TO SCALE

PANEL B , 1 PH., 3 WIRE, 120/240 VOLTS 100 A MLO SURFACE MOUNTED
MIN. INTERRUPTING RATING 10,000 RMS SYM AMPS LOCATION: SOUND EQ ROOM NEMA 1
L = LIGHTS, R = RECEPTACLES, M = MECHANICAL EQUIPMENT, SO = SPARE ONLY, SC = SPARE CIRCUIT E = EXISTING, G = GFI BREAKER
#LO = MAIN LUGS ONLY, MCB = MAIN CIRCUIT BREAKER, N = NEW

POLE SPACE	CKT #	CIRCUIT USE	CKT BKR RATING	CONNECTED LOAD VA A	CONNECTED LOAD VA B	CKT BKR RATING	CIRCUIT USE	POLE SPACE	CKT #
1	1	R -VIDEO EQ ROOM	20	720			SO	2	
3	3	R -VIDEO EQ ROOM	20		720		SO	4	
5	5	R -35"/26" MONITORS	20	1305			SO	6	
7	7	R -CLERK/COMPUTER	20		720		SO	8	
9	9	R -STAFF MONITOR	20	180			SO	10	
11	11	R -TIMER CONTROL PANEL	20		200		SO	12	
	13	SO					SO	14	
	15	SO					SO	16	
	17	SO					SO	18	
	19	SO					SO	20	
	21	SO					SO	22	
	23	SO					SO	24	
	25	SO					SO	26	
	27	SO					SO	28	
	29	SO					SO	30	
	31	SO					SO	32	
	33	SO					SO	34	
	35	SO					SO	36	
	37	SO					SO	38	
	39	SO					SO	40	
	41	SO					SO	42	
				2205	1640				
					3845				

Copyright (c) 1991 by T.J.Krob Consulting Engineers, Inc.

REV	DATE	DESCRIPTION

TJKROB CONSULTING ENGINEERS, INC.
3150 S. VALLEY VIEW BLVD. SUITE 207
LAS VEGAS, NEVADA 89102
(702) 870-5060
ELECTRICAL ENGINEERING

SHEET TITLE: ELECTRICAL DETAILS

PROJECT: CLARK COUNTY COMMISSION CHAMBERS

JOB NUMBER: 1127

DATE: 11-14-91

DRAWN BY: MZ

CHECKED BY: TOM KROB

RECOMMENDED:

DATE:

SHEET: E-2

OF:

1609

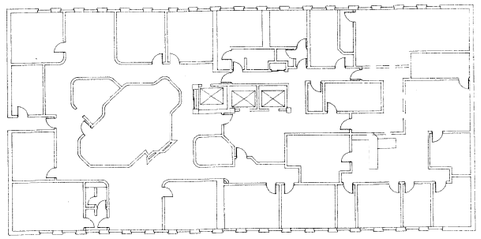

ELECTRICAL PLAN - BRIDGE BUILDING 5TH FLOOR

SCALE: 1/16"=1'-0"

REV	DATE	DESCRIPTION

TJKROB CONSULTING ENGINEERS, INC.
3160 S. VALLEY VIEW BLVD. SUITE 207
LAS VEGAS, NEVADA 89102
(702) 871-3621
ELECTRICAL ENGINEERING

SHEET TITLE: ELECTRICAL DETAILS

PROJECT: COURTHOUSE SECURITY DOOR ADDITIONS

JOB NUMBER: 1142

DATE:

DRAWN BY: MZ

CHECKED BY: TOM KROB

RECOMMENDED:

DATE:

SHEET: E-3

OF: 1609