GENERAL SERVICES DEPARTMENT, FACILITIES SERVICES DIVISION.

COOLING TOWER REPLACEMENT
CLARK COUNTY BRIDGER BUILDING

BOARD OF COMMISSIONERS:

Jay Bingham	Chairman
Karen Hayes	Vice-Chairman
Bruce Woodbury	Member
Paul J. Christensen	Member
William U. Pearson	Member
Thalia M. Dondero	Member
Don Schlesinger	Member
Donald L. "Pat" Shalmy	County Manager

LEGEND & SYMBOLS

ABBREVATION	SYMBOL	DESCRIPTION
BP		BY-PASS
BV		BALL VALVE
BFV		BUTTERFLY VALVE
		BASKET STRAINER
CV		CHECK VALVE
CH		CHILLER
CHWR		CHILLED WATER RETURN
CHWS		CHILLED WATER SUPPLY
CWR		CONDENSER WATER RETURN
CWS		CONDENSER WATER SUPPLY
CT		COOLING TOWER
D	D	DRAIN
		DIRECTION OF FLOW
		FLANGED CONNECTION
FLEX		FLEXIBLE CONNECTION
P		PUMP
		REDUCER
SOV		SHUT-OFF VALVE
		STRAINER
SA		SUPPLY AIR
		UNION CONNECTION
HWS/R		HOT WATER SUPPLY/RETURN

INDEX OF DRAWINGS

M1 : COVER SHEET
M2 : PROJECT LOCATION MAP
M3 : COOLING TOWER & CHILLER PENTHOUSE (AS-BUILT) PLAN & SECTIONS
M4 : COOLING TOWER & CHILLER PENTHOUSE DEMOLITION PLAN
M5 : COOLING TOWER & CHILLER PENTHOUSE RENOVATION PLAN, SECTIONS & SCHEDULE
M6 : CHILLER PENTHOUSE HEAT EXCHANGER INSTALLATION PLAN, SECTIONS & SCHEDULE
M7 : PENTHOUSE PLAN

E1 : ELECTRICAL PLAN, ONE LINE, SCHEDULES, ETC.

S1 : EXISTING COOLING TOWER SUPPORT FRAMING
S2 : NEW COOLING TOWER SUPPORT FRAMING
S3 : STRUCTURAL ADDITIVE ALTERNATES

LOCATION MAP

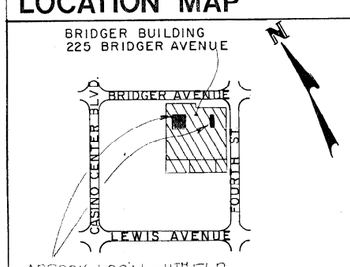

CLARK COUNTY
General Services Department • Facilities Services Division
401 South Fourth Street • Las Vegas, Nevada 89101 • (702) 455-4616

DATE: 2/7/92
PROJECT NO. 100247-44-CO
DRAWN BY: CAMARA ENGINEERING
APPROVED BY:

SHEET TITLE: COVER SHEET

PROJECT: BRIDGER BUILDING COOLING TOWER. AS-BUILT & REPLACEMENT

SHEET NO. M1
OF 7

169

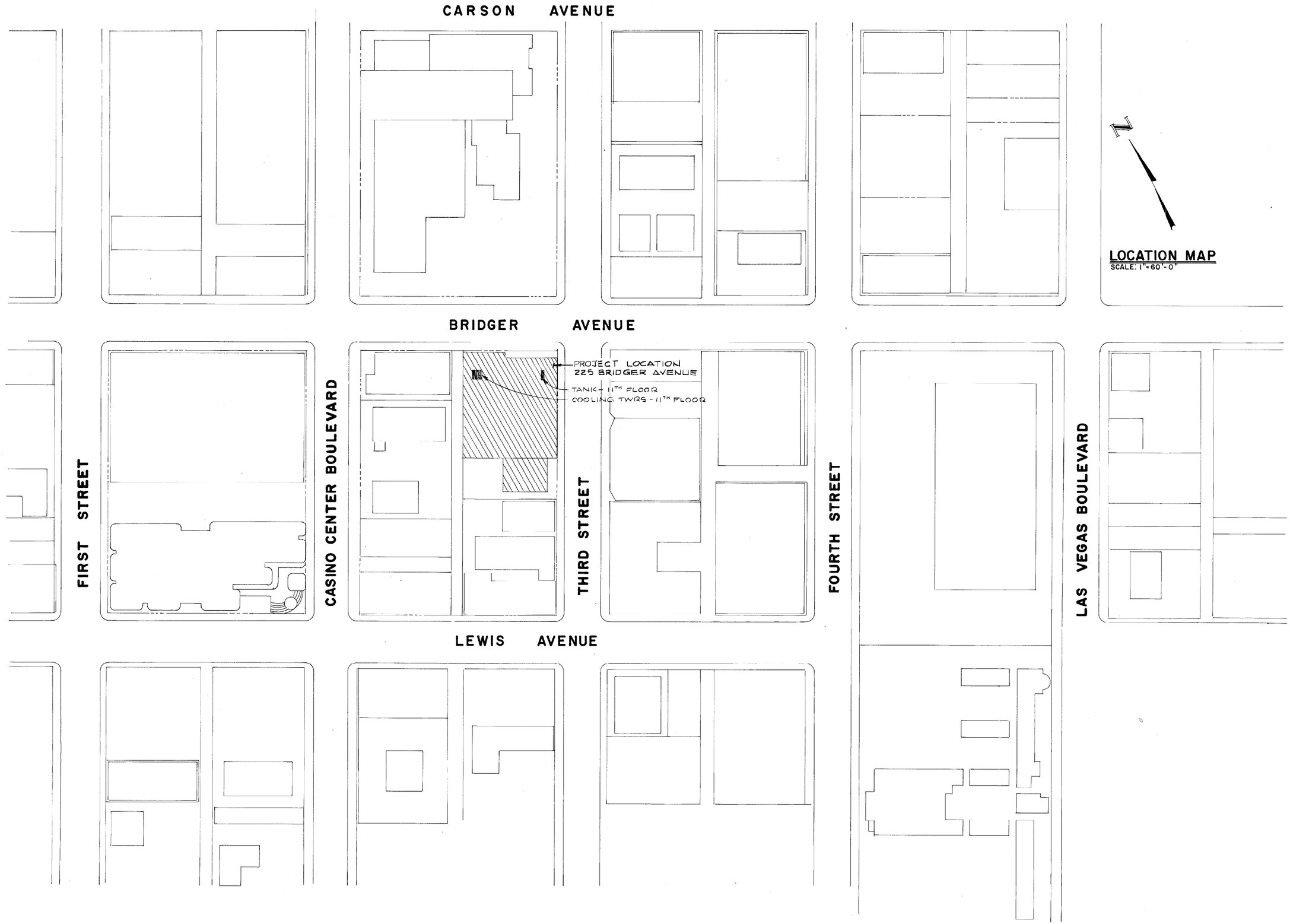

CLARK COUNTY
General Services Department • Facilities Services Division
401 South Fourth Street • Las Vegas, Nevada 89101 • (702) 455-4616

DATE: 2/7/92
PROJECT NO. 00024744-00
DRAWN BY: CAMARA ENGINEERING
APPROVED BY:

SHEET TITLE: LOCATION MAP

PROJECT: BRIDGER BUILDING
COOLING TOWER: AS-BUILT & REPLACEMENT

SHEET NO. M2
OF 7 609

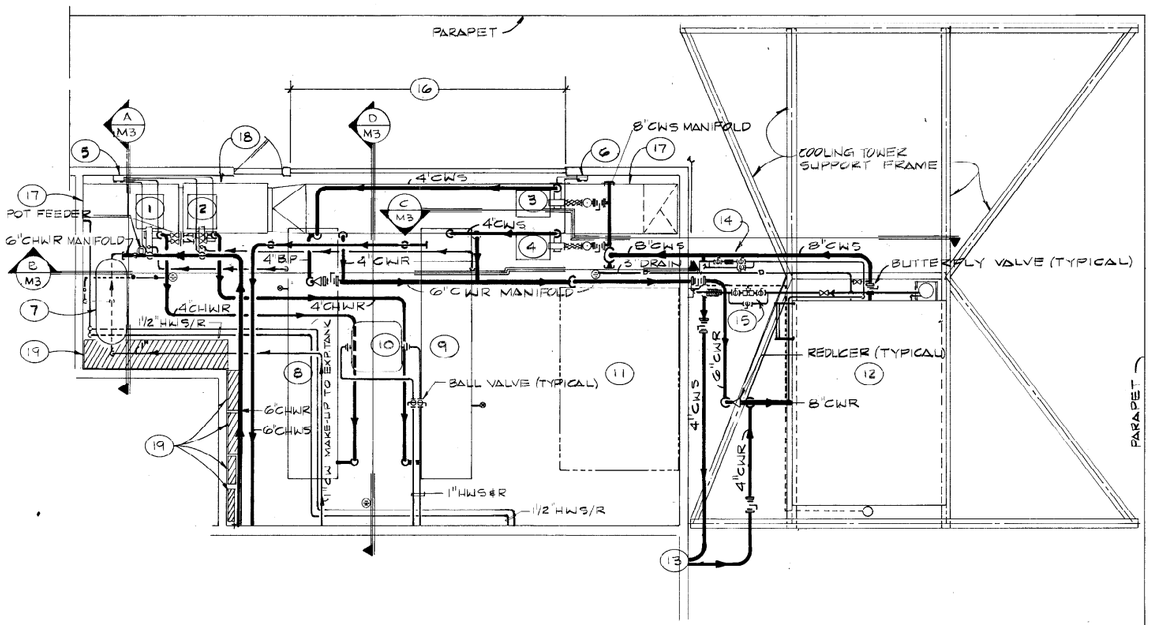

PARTIAL ROOF PLAN & CHILLER PENTHOUSE

SCALE: 1/4"= 1'-0"

NORTH

FLAG NOTES:

1. CHILLED WATER PUMP-1: WEINMAN MODEL 2 1/2 K, NO. 160141, 208V, 3PH, 7 1/2 HP, 200 GPM @ 70' HD.
2. CHILLED WATER PUMP 2, SAME AS PUMP-1.
3. CONDENSING WATER PUMP 3: WEINMAN MODEL 3K, NO. 160862-2, 208V, 3PH, 7 1/2 HP, 300 GPM @ 60' HD.
4. CONDENSING WATER PUMP 4, SAME AS PUMP-3.
5. WALL MOUNTED GAUGE BOX FOR PUMP-1 & PUMP-2
6. WALL MOUNTED GAUGE BOX FOR PUMP-3 & PUMP-4
7. CEILING MOUNTED EXPANSION TANK W/ 1" CHILLED WATER RETURN PIPING
8. CHILLER #1: YORK TURBO-PAK MODEL HT-11
9. CHILLER # 2: SAME AS CHILLER #1
10. CEILING MOUNTED FAN COIL UNIT W/ 1" HOT WATER SUPPLY & 1" HOT WATER RETURN PIPING
11. ABANDONED COOLING TOWER
12. COOLING TOWER BALTIMORE AIRCOIL MODEL VLT-375 D
13. 4" CONDENSING WATER SUPPLY & RETURN FROM 2ND FLOOR MECHANICAL ROOM.
14. 3/4" BLEED ASSEMBLY FROM CONDENSER WATER SUPPLY SYSTEM
15. 3/4" WATER TREATMENT ASSEMBLY.
16. LOUVERED EXTERIOR WALL
17. VENTILATION / SUPPLY AIR DUCTWORK.
18. CEILING MOUNTED (IN-LINE) VENTILATION / SUPPLY AIR FAN
19. ELECTRICAL SWITCH GEAR & PANELS
20. P-1, P-2, P-3, P-4, CH #1, CH #2 & ABANDONED COOLING TOWER ARE MOUNTED ON A CONCRETE PAD. EXTERIOR COOLING TOWER IS MOUNTED ON W SHAPE STRUCTURAL STEEL BEAMS

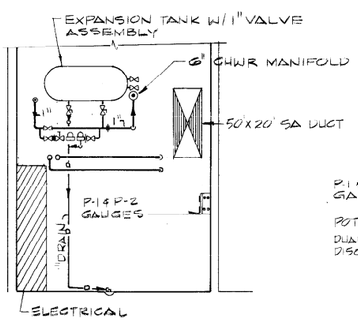

SECTION "A"

SCALE: 1/4"= 1'-0"

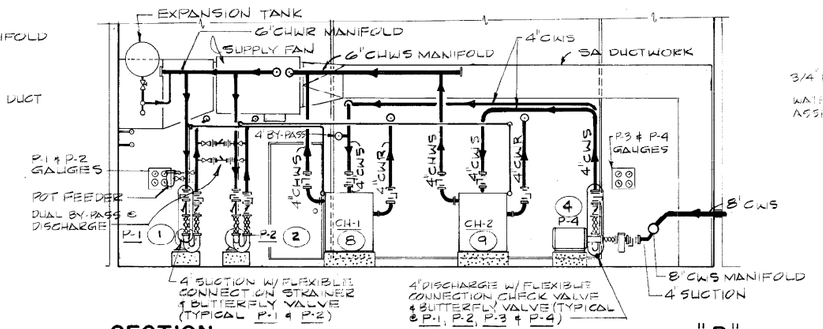

SECTION "B"

SCALE: 1/4"= 1'-0"

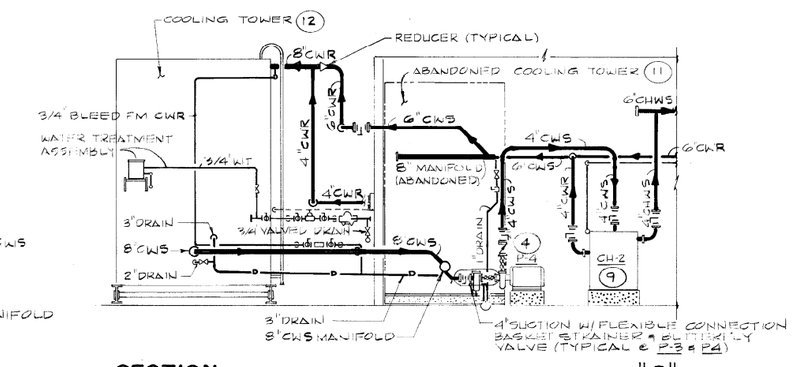

SECTION "C"

SCALE: 1/4"= 1'-0"

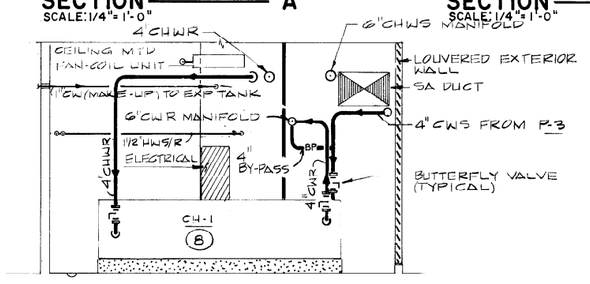

SECTION "D"

SCALE: 1/4"= 1'-0"

CLARK COUNTY
General Services Department • Facilities Services Division
401 South Fourth Street • Las Vegas, Nevada 89101 • (702) 455-4616

DATE: 2/7/92
PROJECT NO. 00024744-00
DRAWN BY: CAMARA ENGINEERING
APPROVED BY:

SHEET TITLE: COOLING TOWER / CHILLER PENTHOUSE PLAN & SECTION(S)

PROJECT: BRIDGER BUILDING COOLING TOWER AS-BUILT

SHEET NO. M3

OF 7/1609

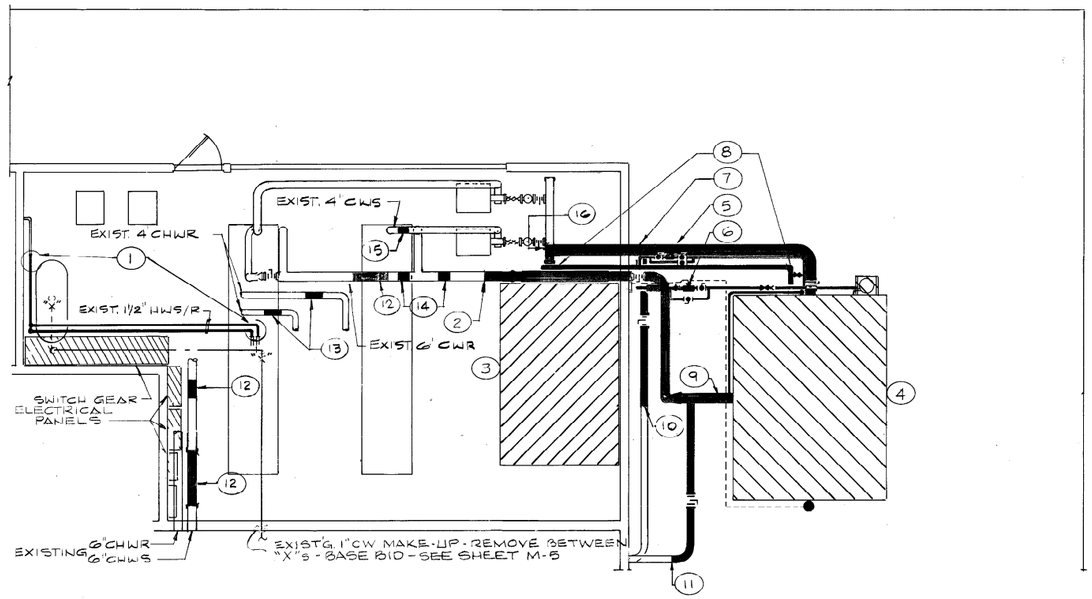

COOLING TOWER & CHILLER PENTHOUSE: DEMOLITION PLAN

SCALE: 1/4" = 1'-0"

NORTH

FLAG NOTES:

1. CUT EXISTING 1-1/2" HWS & HWR PIPING AT LOCATION SHOWN. (BASE BID) REMOVE ALL PIPING TO LIMITS SHOWN & CAP. SEE FLAG NOTE 1 SHT. M-5
2. CUT EXISTING 6" CWR PIPING AT LOCATION SHOWN. REMOVE ALL PIPING, VALVES, ETC. TO LIMITS SHOWN. (BASE BID)
3. REMOVE EXISTING ABANDONED COOLING TOWER & SUPPORTS. (BASE BID)
4. DISCONNECT ALL PIPING & REMOVE EXISTING COOLING TOWER. (BASE BID)
5. REMOVE COOLING TOWER BLEED AND MAKE-UP SYSTEM & REINSTALL ON NEW TOWER TO INCLUDE NEW CLAYTON VALVE & EXTERIOR FLOAT ASSEMBLY IN ONE LOCATION AT OWNER'S DIRECTION. (BASE BID & ADD. ALT'S.)
6. REMOVE COOLING TOWER WATER TREATMENT SYSTEM & REINSTALL ON NEW TOWER IN LOCATION DESIGNATED BY OWNER. (BASE BID & ADD. ALT'S.)
7. CUT EXISTING 8" CWS PIPING AT EXISTING MANIFOLD. REMOVE ALL CWS PIPING, VALVES, ETC. BEYOND THIS POINT. (BASE BID)
8. REMOVE 3" OVERFLOW & 2" DRAIN PIPING & VALVES. (BASE BID)
9. REMOVE ALL EXISTING 8" CWR PIPING & VALVES. (BASE BID)
10. SAME AS FLAG NOTE 2, EXCEPT 4" CWS PIPING & VALVES. (BASE BID)
11. SAME AS FLAG NOTE 2, EXCEPT 4" CWR PIPING & VALVES. (BASE BID)
12. SAME AS FLAG NOTE 2, EXCEPT 6" CHWS PIPING (ADDITIVE ALTERNATE #2 A)
13. SAME AS FLAG NOTE 2, EXCEPT 4" CHWR PIPING (ADDITIVE ALTERNATE #2 A)
14. SAME AS FLAG NOTE 2, EXCEPT 6" CWR PIPING (ADDITIVE ALTERNATE #2 A)
15. SAME AS FLAG NOTE 2, EXCEPT 4" CWS PIPING (ADDITIVE ALTERNATE #2 A)
16. CUT EXISTING 8" CWS PIPING MANIFOLD 2" BEYOND 4" CONNECTION FROM PUMP & CAP. (BASE BID)
17. FIELD VERIFY SIZE & TYPE OF LINE(S) CAPPED & PLACE INFORMATION TAG OR STICKER ON CAP.
18. RETURN ALL REUSABLE VALVES, SENSORS, PIPING, ETC. TO OWNER.
19. PIPING SHOWN SOLID ON THIS DRAWING IS TO BE REMOVED.

CLARK COUNTY
General Services Department • Facilities Services Division
401 South Fourth Street • Las Vegas, Nevada 89101 • (702) 455-4616

DATE: 2/7/92
PROJECT NO. 00024744-00
DRAWN BY: CAMARA ENGINEERING
APPROVED BY:

SHEET TITLE: MECHANICAL DEMOLITION PLAN

PROJECT: BRIDGER BUILDING COOLING TOWER REPLACEMENT

SHEET NO. M4
OF 7 1609

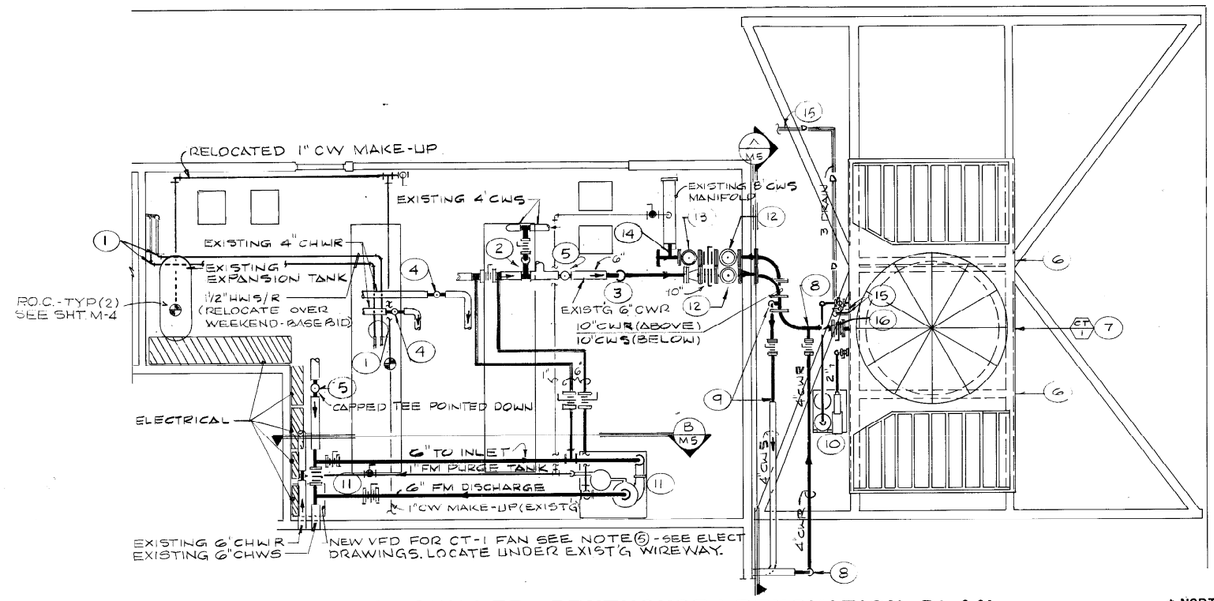

COOLING TOWER & CHILLER PENTHOUSE : RENOVATION PLAN

NORTH

SCALE: 1/4" = 1'-0"

SPECIAL INSTRUCTIONS:

1. REMOVAL OF THE EXISTING EQUIPMENT AND INSTALLATION OF THE NEW COOLING TOWER MUST BE COMPLETED WITHIN A MAXIMUM OF FOURTEEN (14) CONSECUTIVE DAYS.
2. THE COOLING TOWER MUST BE FULLY INTEGRATED FOR USE INTO THE HVAC SYSTEM AT THE END OF THE 14 DAY PERIOD.
3. THE WARRANTY PERIOD FOR THE COOLING TOWER WILL BEGIN WHEN THE UNIT STARTED-ON OR BEFORE THE 14 DAY PERIOD EXPIRES.
4. THE CONTRACTOR SHALL PROVIDE WATER TREATMENT FOR THE SYSTEM UNTIL NOTICE OF SUBSTANTIAL COMPLETION IS ISSUED IF OWNER'S CHEMICAL TREATMENT IS NOT RECONNECTED BY THE CONTRACTOR BEFORE THE TOWER IS REQUIRED TO OPERATE AT THE END OF THE 14 DAY PERIOD IN SPECIAL INSTRUCTIONS 1 & 2 ABOVE.
5. PROVIDE AIR VENTS AT ALL HIGH POINTS OF NEW PIPING. PROVIDE POT CHEMICAL FEEDER ON CWS IF ALT 2B IS ACCEPTED.
6. ACCEPTANCE OF ANY OR ALL OF THE ALTERNATES DOES NOT RELIEVE THE CONTRACTOR FROM THE REQUIREMENTS OF SPECIAL INSTRUCTIONS 1 THROUGH 5 ABOVE. INSTALLATION OF ADDITIVE ALTERNATE #2B EQUIPMENT MAY TAKE PLACE AFTER THE INITIAL 14 DAY PERIOD PROVIDED THE COOLING TOWER REMAINS IN OPERATION.
7. ALL MOTORS - HIGH EFFICIENCY ONLY. PWM VFD'S REQUIRE HIGH EFFICIENCY PREMIUM GRADE ONLY. EXISTING 6" CHWS

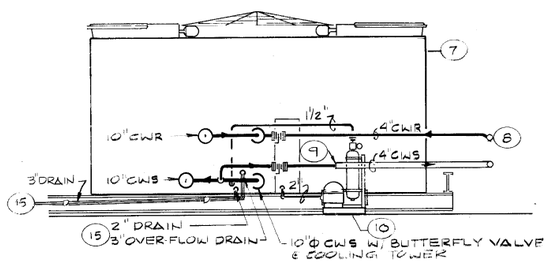

SECTION "A"

SCALE: 1/4" = 1'-0"

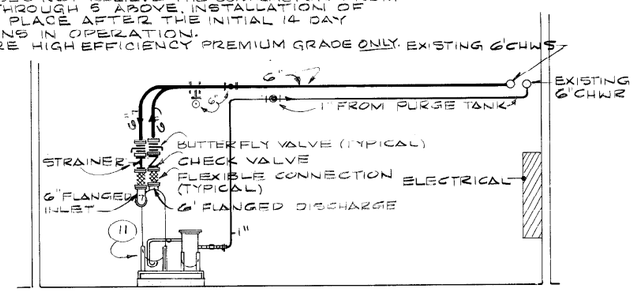

SECTION "B"

SCALE: 1/4" = 1'-0"

COOLING TOWER SCHEDULE

MARK	NO. REQD	TYPE	GPM	EWT	LWT	DESIGN AMBIENT WBT	ELECTRICAL VOLTS	PH	HP	MFGR. & MODEL NO.
CT-1	(1)	INDUCED DRAFT COUNTERFLOW	825 (1)	88.3 (1)	78.3 (1)	74F° (1)	460	3	30	BALTIMORE AIR COIL SERIES 3000 PX, MODEL 3424

(1) SUMMER DUTY NUMBERS SHOWN IN SCHEDULE, WINTER REQUIREMENTS ARE,
GPM: 825
EWT: 51.1
LWT: 47.8
DESIGN WBT: 42F° AMBIENT.

(2) SEE SPECIFICATIONS FOR REQUIREMENTS, SECTION 15712.

(3) IN ADDITION TO HP SHOWN ELECTRICAL HEATERS LOCATED IN SUMP BASIN, (2) REQUIRED @ 12 KW EACH, SHALL BE PROVIDED.

(4) BASE BID MODEL NUMBER SHOWN IN SCHEDULE. ALTERNATE NO. 1 MODEL NUMBER IS BALTIMORE AIR COIL SERIES 3000 JE PREMIER MODEL NUMBER 3424. SEE SPECIFICATIONS FOR REQUIREMENTS, SECTION 15712. (SEE NOTE (5) BELOW)

(5) WITH EXTERNAL MAKE-UP ASSEMBLY AQUA-FLOAT # 100, (BASE BID & ADD. ALT #1) & WITH 30 HP GRAHAM VFD W/ BYPASS & CONTROL FOR CT-1 FAN (BASE BID & ADD. ALT #1) - & VIBRATION SWITCH. NOTE: PWM TYPE VFD REQUIRE "PREMIUM" GRADE CT FAN MTR.

FLAG NOTES:

1. REMOVE CAPS, INSTALL NEW 90 DEGREE ELBOWS & INSTALL NEW 1-1/2" HWS & HWR RETURN PIPING AS SHOWN. RECONNECT TO EXISTING PIPING. PROVIDE NEW INSULATION PER SPECIFICATION SECTION 15260, WITH THICKNESS TO MATCH EXISTING PIPING. SEE FLAG NOTE # 3, SHEET M-4. (BASE BID)
2. INSTALL NEW 4" BY-PASS LINE WITH BUTTERFLY VALVE BETWEEN EXISTING 4"CWS LINE & EXISTING 6" CWR LINE. SEE FLAG NOTES # 14 & # 15, SHEET M-4. (ADDITIVE ALTERNATE #2 A)
3. REMOVE CAP & INSTALL NEW 6" CWR PIPING TO CENTER LINE OF NEW 10" CWR PIPING TO TOWER. PROVIDE 90 DEGREE ELBOWS AS REQUIRED. PROVIDE BUTTERFLY VALVE IN RISER, & PROVIDE REDUCER FROM 10" TO 6" PIPING. SEE FLAG NOTE # 2, SHEET M-4. (BASE BID)
4. REMOVE CAP & INSTALL NEW 4" X 4" X 4" TEE & CAP UNUSED OUTLET OF TEE FOR FUTURE. SEE FLAG NOTE # 13, SHEET M-4. (ADDITIVE ALTERNATE #2 -A)
5. REMOVE CAP & INSTALL NEW 6" X 6" X 6" TEE & CAP UNUSED OUTLET OF TEE FOR FUTURE. SEE FLAG NOTE # 14, SHEET M-4. (ADDITIVE ALTERNATE #2 A)
6. NEW COOLING TOWER SUPPORT. SEE STRUCTURAL DRAWINGS. PROVIDE VIBRATION ISOLATORS PER SPECIFICATION SECTION 15425. (BASE BID)
7. NEW COOLING TOWER (CT-1). SEE EQUIPMENT SCHEDULE THIS SHEET & SPECIFICATION SECTION 15712. (BASE BID)
8. REMOVE CAP & INSTALL NEW OFFSET 4" CWR RETURN PIPING TO CENTER LINE OF NEW 10" CWR PIPING TO TOWER: PROVIDE 4" BUTTERFLY VALVE & CONNECT 4" CWR PIPING TO 10" CWR PIPING. SEE FLAG NOTE # 11, SHEET M-4. (BASE BID)
9. REMOVE CAP & PROVIDE NEW 4" CWS PIPING WITH BUTTERFLY VALVE & CONNECT TO NEW 10" CWS PIPING. SEE FLAG NOTE # 10 M4 (BASE BID)
10. PACKAGED SKID MOUNTED SIDE STREAM FILTER SYSTEM, GRISWOLD MODEL CSF-150, WITH 115V, SINGLE PHASE, 1 HP ELECTRICAL SERVICE TO PUMP. SEE SPECIFICATION SECTION 15540. PROVIDE 2" SUCTION LINE FROM TOWER, & 1 1/2 DISCHARGE LINE TO TOWER AS SHOWN. PROVIDE BALL VALVES AT TOWER. (ADDITIVE ALTERNATE #2 B)
11. SKID MOUNTED SEPARATOR & PURGE TANK, ON 6" THICK CONCRETE PAD WITH 6" FLANGED INLET & DISCHARGE CONNECTIONS, AND 1" PURGE LINE CONNECTION. SYSTEM TO BE GRISWOLD CONTROLS. SEE SPECIFICATION SECTION 15515. ROUTE 6" SUPPLY & RETURN PIPING AS SHOWN & CONNECT TO EXISTING 6"CHW/C/WS LINE. PROVIDE NORMALLY CLOSED 6" BUTTERFLY BYPASS VALVE IN LINE AS SHOWN. ROUTE 1" PURGE LINE AS SHOWN & WET TAP INTO EXISTING 6"CHW/C/WR LINE. SEE FLAG NOTE # 12 SHEET M-4. (ADDITIVE ALTERNATE #2 B, PIPING & VALVES - ADD ALT 2B SEPERATOR + TANK) SEE FLAG NOTE 12 SHT. M4
12. PROVIDE 10" X 10" X 10" TEE. PROVIDE BLIND FLANGE FOR UNUSED PORTION OF TEE. (ADDITIVE ALTERNATE #2 A)
13. PROVIDE 10" X 10" X 10" TEE. PROVIDE BLIND FLANGE FOR UNUSED PORTION OF TEE. (ADDITIVE ALTERNATE #2 A)
14. REMOVE CAP FROM EXISTING 8" CWS MANIFOLD & CONNECT TO NEW 10" CWS LINE FROM COOLING TOWER. (BASE BID) SEE FLAG NOTE 16 - SHT M4
15. PROVIDE 3" OVERFLOW DRAIN PIPING FROM NEW COOLING TOWER TO EXISTING FLOOR SINK & TERMINATE WITH 1" AIR GAP. CONNECT 2" DRAIN LINE FROM COOLING TOWER TO 3" OVERFLOW DRAIN LINE. PROVIDE 2" BALL VALVE ON DRAIN LINE FROM TOWER AT TOWER CONNECTION. (BASE BID)
16. 10" CWR PIPING IS SHOWN CUT AWAY FOR CLARITY OF 4" CWR & 10" CWS PIPING BELOW.
17. ALL PIPING SHOWN SINGLE LINE ON THIS SHEET IS NEW.

CLARK COUNTY
General Services Department • Facilities Services Division
401 South Fourth Street • Las Vegas, Nevada 89101 • (702) 455-4616

DATE: 2/7/92
PROJECT NO. 100024744-00
DRAWN BY: CAMARA ENGINEERING
APPROVED BY:

SHEET TITLE: MECHANICAL: RENOVATION PLAN SECTION & SCHEDULE

PROJECT: BRIDGER BUILDING COOLING TOWER REPLACEMENT

SHEET NO. M5 OF 7

1609

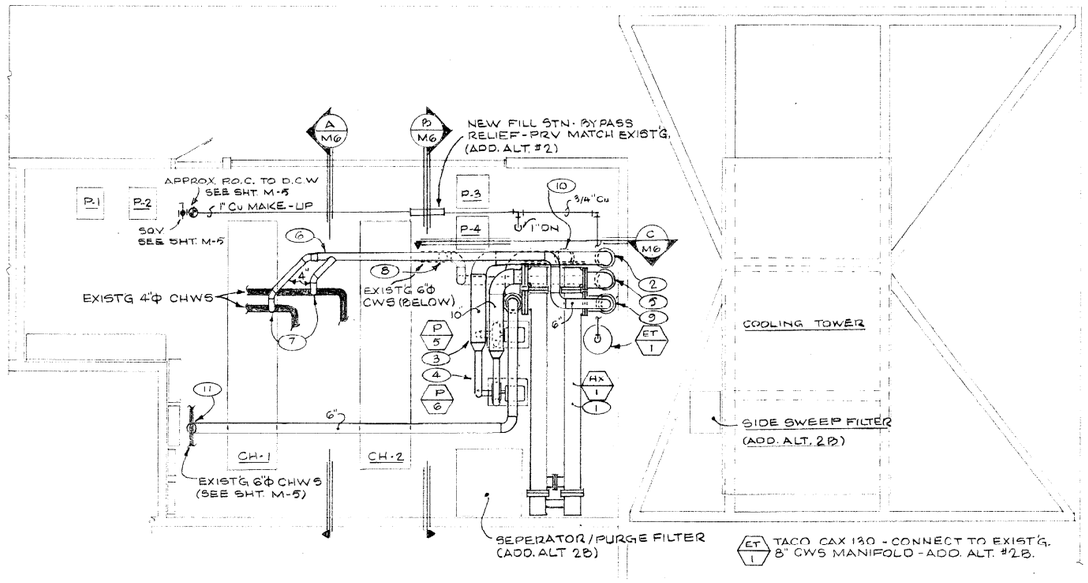

HEAT EXCHANGER INSTALLATION PLAN

NORTH

SCALE: 1/4" = 1'

ALL WORK SHOWN ON THIS SHEET TO BE INCLUDED IN ALTERNATE 2B.

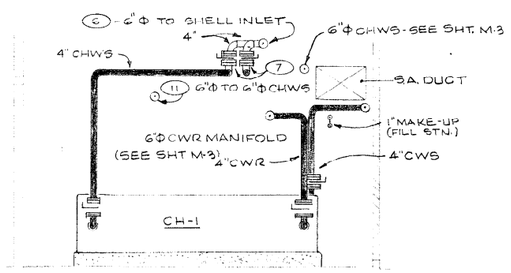

SECTION "A"

SCALE: 1/4" = 1'

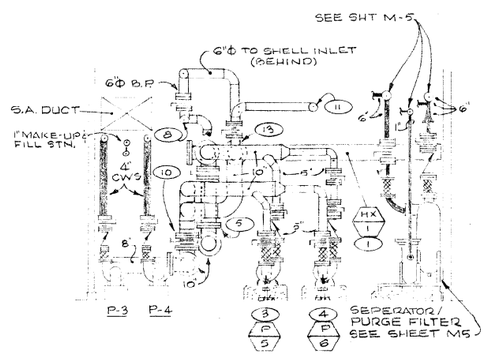

SECTION "B"

SCALE: 1/4" = 1'

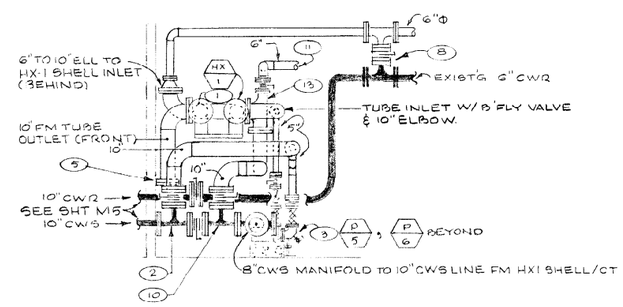

SECTION "C"

SCALE 1/4" = 1'

FLAG NOTES:

1. NEW SHELL & TUBE HEAT EXCHANGER (HX-1) WITH BOTTOM MOUNTED 7'2" ABOVE FLOOR ON STAND PROVIDED BY STRUCTURAL. SEE SHT. S-3. HX-1 HAS 10" FLANGED SHELL INLET & OUTLET & TUBE INLET & OUTLET CONNECTIONS. SEE EQUIPMENT SCHEDULE THIS SHEET & SPECIFICATION SECTION 15755. (ADDITIVE ALTERNATE #2B)
2. REMOVE BLIND FLANGE FROM 10" SUPPLY LINE FROM TOWER. (SEE FLAG NOTE # 12, SHEET M-5). INSTALL BUTTERFLY VALVE & ROUTE CWS MANIFOLD AS SHOWN, WITH BOTTOM 6'1" FROM FINISHED FLOOR. (ADDITIVE ALTERNATE #2B)
3. INSTALL NEW TOWER WATER PUMP (P-5) WITH 5" SUCTION & 4" DISCHARGE CONNECTIONS. MOUNT PUMP ON CONCRETE PAD, 24" X 18" X 10". FROM 10" SUCTION MANIFOLD PROVIDE 5" SUCTION LINE WITH BUTTERFLY VALVE, SUCTION DIFFUSER & FLEXIBLE CONNECTION. AT 4" DISCHARGE, PROVIDE FLEXIBLE CONNECTION, CHECK VALVE & BUTTERFLY VALVES & CONNECT 4" DISCHARGE LINE TO 10" TUBE INLET. SEE EQUIPMENT SCHEDULE THIS SHEET & SPECIFICATION SECTION 15540. (ADDITIVE ALTERNATE 2B)
4. SAME AS FLAG NOTE # 3, EXCEPT NEW PUMP, P-6. (ADDITIVE ALTERNATE 2B)
5. REMOVE BLIND FLANGE FROM 10" RETURN LINE TO TOWER. (SEE FLAG NOTE # 12, SHEET M-5). INSTALL BUTTERFLY VALVE, & 10" LINE FROM HX-1 TUBE OUTLET & CONNECT TO FLANGE AS SHOWN. (ADDITIVE ALTERNATE 2B)
6. INSTALL NEW 6" PIPING, BOTTOM MOUNTED 13' 1" ABOVE FINISHED FLOOR, & ROUTE TO HX-1 SHELL INLET. PROVIDE BUTTERFLY VALVE. (ADDITIVE ALTERNATE 2B)
7. REMOVE CAP FROM EXISTING 4" CHWS LINES (SEE FLAG NOTE # 4, SHEET M-5). INSTALL BUTTERFLY VALVES & CONNECT 4" CHWS LINE TO 6" PIPING. SEE FLAG NOTE # 6. (ADDITIVE ALTERNATE 2B)
8. REMOVE CAPS FROM EXISTING 6" CWR LINE (SEE FLAG NOTE # 5, SHEET M-5). INSTALL BUTTERFLY VALVE & CONNECT 6" CWR LINE TO 6" PIPING. SEE FLAG NOTE # 6. (ADDITIVE ALTERNATE 2B)
9. AT HX-1 SHELL INLET PIPING PROVIDE 10" DIAMETER ELBOW UP W/10" TO 6" DAIMETER REDUCER & BUTTERFLY VALVE. INSTALL 10" BUTTERFLY VALVE & CONNECT 10" OUTLET FROM TEE TO HX-1 SHELL OUTLET. (ADDITIVE ALTERNATE 2B)
10. REMOVE BLIND FLANGE FROM 10" TEE. (SEE FLAG NOTE # 13, SHEET M-5). INSTALL BUTTERFLY VALVE & ELBOWS AS REQUIRED & CONNECT TO 10" TEE CONNECTION DESCRIBED IN FLAG NOTE # 13. (ADDITIVE ALTERNATE 2B)
11. REMOVE CAP FROM EXISTING 6" CHWS LINE (SEE FLAG NOTE #5, SHEET M-5) & ROUTE NEW PIPING TO 6" TEE CONNECTION DESCRIBED IN FLAG NOTE # 13. PROVIDE BUTTERFLY VALVE & ROUTE PIPING 9'11" ABOVE FINISHED FLOOR. (ADDITIVE ALTERNATE 2B)
12. SINGLE LINE PIPING ON THIS DRAWING IS EXISTING.
13. AT HX-1 SHELL OUTLET PROVIDE 10"X6'X10" TEE. CONNECT 10" TO HX1 SHELL OUTLET, 6" TO CHWS IN FLAG NOTE # 11 AND 10" TO 10" DIAMETER LINE IN FLAG NOTE # 10. PROVIDE BUTTERFLY VALVES AS SHOWN.

HEAT EXCHANGER SCHEDULE

MARK	NO. REQ'D	TYPE	SUMMER DUTY SHELL GPM	SUMMER DUTY SHELL E.W.T.	SUMMER DUTY SHELL L.W.T.	SUMMER DUTY SHELL PRESS DROP	SUMMER DUTY TUBE GPM	SUMMER DUTY TUBE E.W.T.	SUMMER DUTY TUBE L.W.T.	SUMMER DUTY TUBE PRESS DROP	WINTER DUTY SHELL GPM	WINTER DUTY SHELL E.W.T.	WINTER DUTY SHELL L.W.T.	WINTER DUTY SHELL PRESS DROP	WINTER DUTY TUBE GPM	WINTER DUTY TUBE E.W.T.	WINTER DUTY TUBE L.W.T.	WINTER DUTY TUBE PRESS DROP	MANUFACTURER & MODEL NO.
HX 1	(1)	SHELL & TUBE (MARINE ENDS)	600	95	85	6.0 P.S.I.	825	79	86.3	13.7 P.S.I.	400	55	50	5.0 P.S.I.	825	48	50.5	13.7 P.S.I.	BALTIMORE AIRCOIL HIGH-K MODEL 14-12-2-B (1)

(1) SEE SPECIFICATIONS SECTION 15755

PUMP SCHEDULE

MARK	TYPE	GPM	FT. HD.	ELECTRICAL V	ELECTRICAL Φ	ELECTRICAL HP	MANUFACTURER & MODEL NO.
P 5, P 6	CLOSE COUPLED CENTRIFUGAL	412.5	57.0	460	3	10	WEINMAN SERIES 310 MODEL # 4"-KL IMPELLER# 5412-8"-80%

INSTRUMENTATION SCHEDULE

EQUIP. ITEM	DEVICE PRESS. GAUGE	DEVICE THERMOMETER	DEVICE FLOW METER*	INSTALL UNDER
CH-1		2 - 30/180°F	2-(4")	BASE BID & ADD. ALT. #1 & ADD. ALT. #2A
CH 2		2 - 30/180°F	2-(4")	
P-1	2 - 0/60 PSI			
P-2	2 - 0/60 PSI			
P-3	2 - 0/80 PSI			
P-4	2 - 0/60 PSI			
HX-1		4 - 30/180°F	2-(1-10"; 1-6")	ADD. ALT. #2B
P-5	2 - 0/60 PSI			
P-6	2 - 0/60 PSI			

* METRAFLEX - DIRECT READING

CLARK COUNTY
General Services Department • Facilities Services Division
101 South Fourth Street • Las Vegas, Nevada 89101 • (702) 455-4616

DATE: 9/92 | PROJECT NO.
DRAWN BY: FSA
APPROVED BY:

SHEET TITLE: HEAT EXCHANGER INSTALLATION PLAN, SECTIONS & SCHEDULES
PROJECT: CLARK COUNTY BRIDGER BUILDING COOLING TOWER REPLACEMENT

SHEET NO. M 6
OF 7 1609

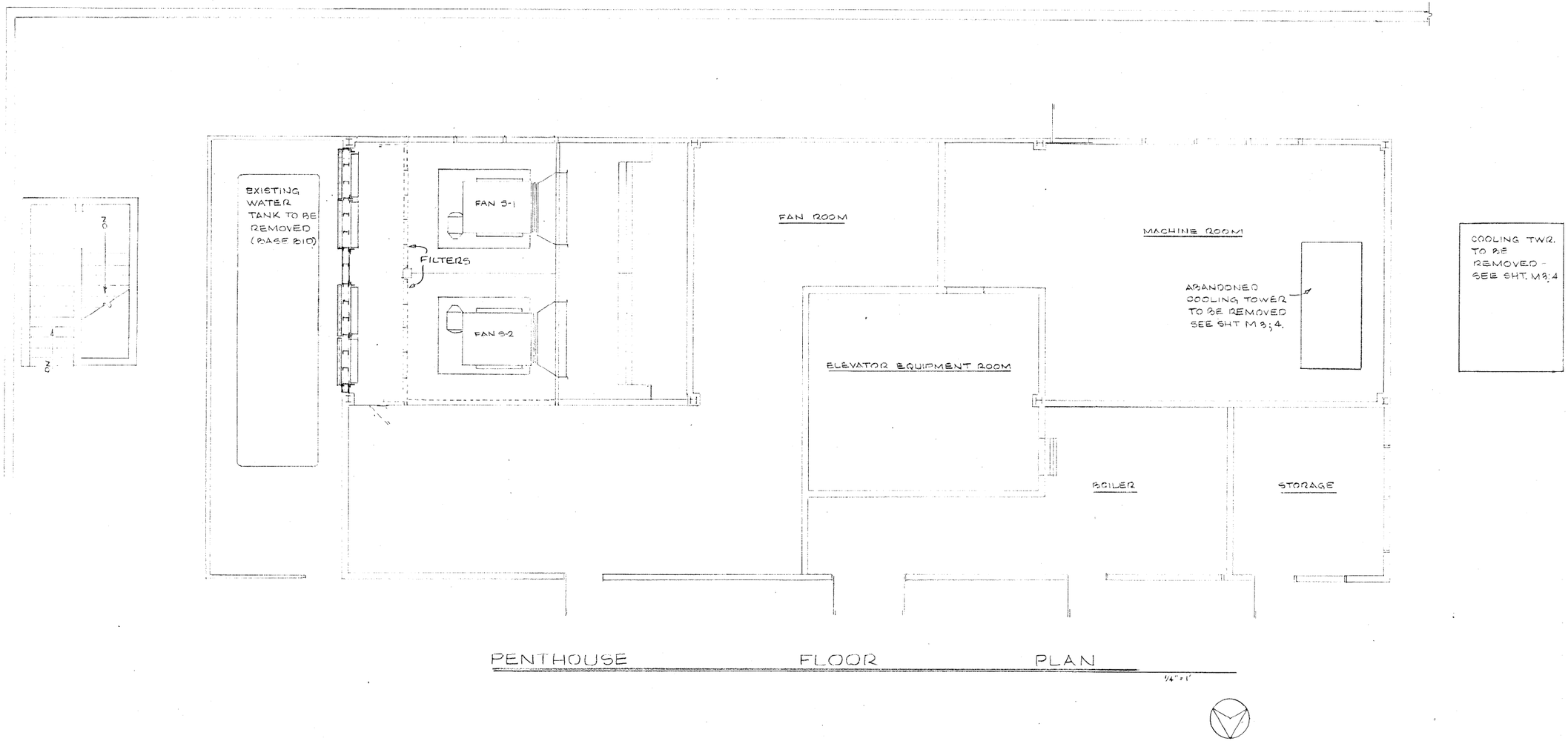

PENTHOUSE FLOOR PLAN

CLARK COUNTY
General Services Department • Facilities Services Division
401 South Fourth Street • Las Vegas, Nevada 89101 • (702) 455-4616

DATE: 8/92
PROJECT NO.
DRAWN BY: PSA
APPROVED BY:

SHEET TITLE: PENTHOUSE FLOOR PLAN - EQUIPMENT REMOVAL

PROJECT: CLARK COUNTY BRIDGER BLDG. COOLING TOWER REPLACEMENT 225 BRIDGER AVE. LAS VEGAS, N.V.

SHEET NO. M 7
OF 7/1609

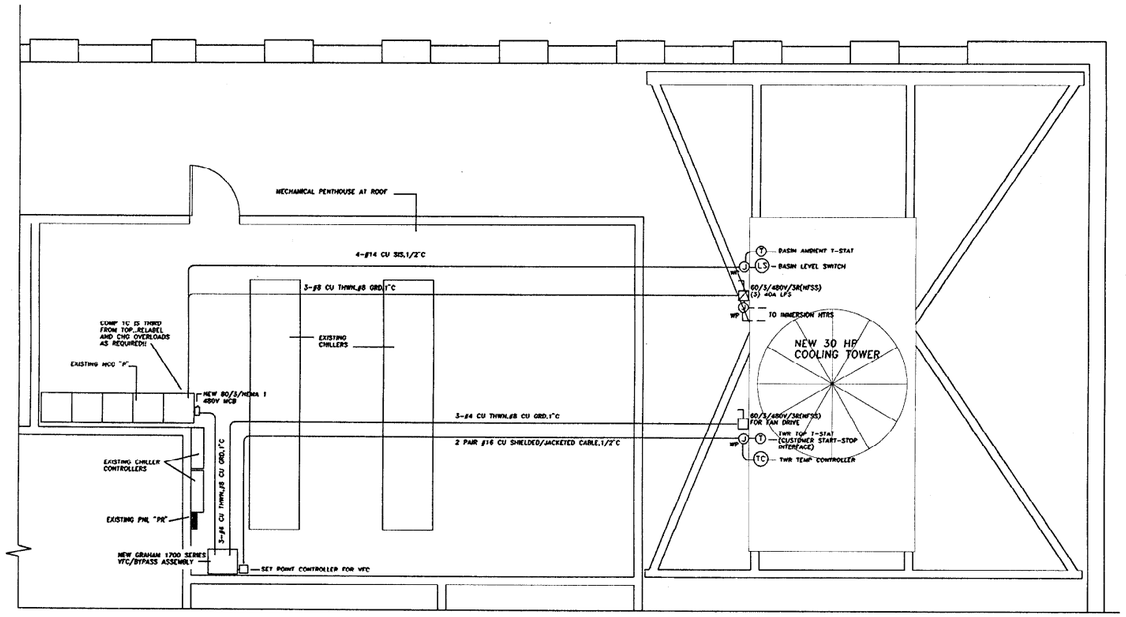

BASE ELECTRICAL PLAN–REPLACE COOLING TOWER

SCALE: 1/4"=1'-0"

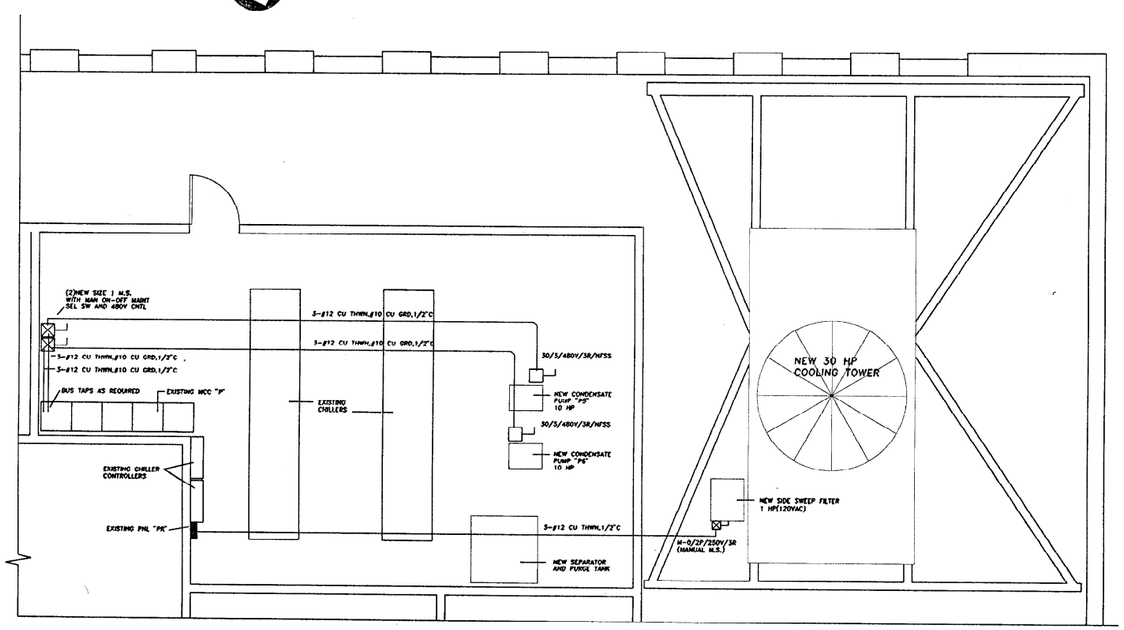

ADDITIVE ALTERNATE 2B ELECTRICAL PLAN–REPLACE COOLING TOWER

SCALE: 1/4"=1'-0"

ONE LINE NOTES:

1. DEVICE IS GRAHAM 1700 SERIES ADJUSTABLE FREQ SPEED CONTROLLER WITH FUSED OUTPUT/INTEGRAL FUSED BYPASS CAPABILITY INCLUDING ALL NEC RUNNING PROTECTION/OVERLOAD DEVICES...SUPPLIED WITH TOWER.. INSTALLATION INTERFACE WIRING AND RACEWAY BY ELECTRICL CONTRACTOR!!
2. DEVICE IS SET POINT/REMOTE INPUT CONTROLLER FOR GRAHAM 1700 SERIES FSC.. SUPPLIED WITH TOWER...INSTALLATION INTERFACE WIRING AND RACEWAY BY ELECTRICAL CONTRACTOR!!
3. 1 PR #16 SHIELDED IN 1/2"C TO TEMP CONTROLLER AT TOWER.
4. 1 PR #16 SHIELDED IN 1/2"C TO TEMP STAT AT TOP OF TOWER.

4-#14 CU SIS CONTROL WIRE IN 1/2"C (LEVEL SW/BASIN TEMP SW) FOR HTR CONTROL.

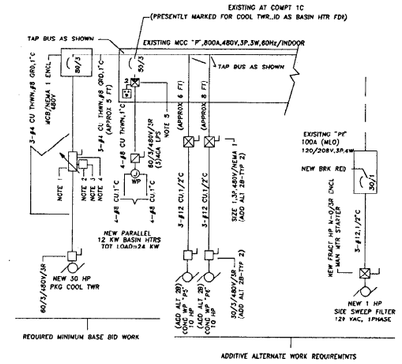

ELECTRICAL ONE-LINE DIAGRAM

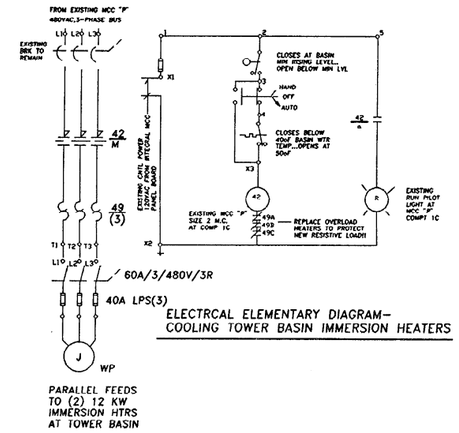

ELECTRCAL ELEMENTARY DIAGRAM–COOLING TOWER BASIN IMMERSION HEATERS

ELECTRICAL NOTES

1. THE ELECTRICAL CONTRACTOR SHALL FURNISH ALL MATERIALS, TOOLS, DRAFTING, SERVICES, PERMITS, INSPECTION FEES, REQUIRED TO ACCOMPLISH THE ELECTRICAL WORK ASSOCIATED WITH THE PROJECT, NOTWITHSTANDING THE SITE CONDITIONS.
2. THE ELECTRICAL CONTRACTOR'S WORK INCLUDES LIAISON WITH THE SERVING PUBLIC UTILITIES INVOLVED, AND THE FURNISHING/INSTALLATION OF ALL PUBLIC UTILITY RACEWAY SYSTEMS(COMPLETE WITH PULL WIRES/ENTRANCE CAPS), VAULTS, PADS, HANDHOLES, REVENUE METERING FACILITIES IN ACCORDANCE WITH THE SERVING UTILITIES SERVICE RULES AND ENGINEERING STANDARDS.
3. ALL ELECTRICAL MATERIAL, EQUIPMENT, APPARATUS OR OTHER ITEM FURNISHED BY THE ELECTRICAL CONTRACTOR FOR THIS PROJECT, SHALL BE NEW, OF THE TYPE, CAPACITY AND QUALITY REQUIRED TO IMPLEMENT THE REQUIREMENTS OF THE PROJECT ELECTRICAL DRAWINGS, AND SHALL BE STANDARD OFF-THE-SHELF PRODUCTS OF ESTABLISHED FIRMS REGULARLY ENGAGED IN THE PRODUCTION/MANUFACTURE OF SUCH EQUIPMENT, APPARATUS, MATERIAL AND/OR ITEM, AND SHALL, WITHOUT EXCEPTION, BEAR THE U.L. LABEL OR BE U.L. LISTED.
4. THE ELECTRICAL CONTRACTOR'S INSTALLATION SHALL BE PERFORMED IN A NEAT, SAFE AND PROFESSIONAL FASHION.
5. THE ELECTRICAL CONTRACTOR SHALL REFER TO THE DRAWINGS OF OTHER CRAFTS TO ASSURE PROPER INTERFACE OF THE CONTROL DEVICES ASSOCIATED WITH THE MECHANICAL/ELECTRICAL EQUIPMENT.
6. ALL MATERIAL AND INSTALLATION PROCEDURES SHALL BE IN FULL COMPLIANCE WITH THE LATEST CODES/STATUTES/SAFETY ORDERS/ ORDINANCES/GUIDELINES/RULES AND REGULATIONS OF ALL FEDERAL, STATE, PROVINCIAL, COMMONWEALTH, COUNTY, PARRISH, CITY, INCORPORATED/UNINCORPORATED TOWNSHIP, AND/OR PUBLIC UTILITY HAVING PROJECT JURISDICTION. NOTHING ON THE PROJECT ELECTRICAL DRAWINGS OR OTHERWISE SPECIFIED HEREIN SHALL BE CONSTRUED BY THE CONTRACTOR TO ALLOW THE SUBSTITUTION OF EQUIPMENT, APPARATUS, MATERIALS, ITEMS OR INSTALLATION PROCEDURES, WHICH PRODUCE AN INSTALLATION NOT CONFORMING TO THE REQUIREMENTS SPECIFIED ABOVE.
7. WHERE THE PROJECT ELECTRICAL DRAWINGS INDICATE WORK OR MATERIAL REQUIREMENTS IN EXCESS OF THOSE SPECIFIED IN PUBLISHED CODES, ETC., THE DRAWINGS SHALL GOVERN.
8. REFERENCE THE TOWER SUPPLIERS DRAWINGS FOR ALL ELECTRICAL ELEMENTARIES/SCHEMATICS RELATIVE TO VARIABLE FREQUENCY CONTROLLERS/SET POINT DEVICES FOR THE PROJECT.

DO NOT SCALE THESE DRAWINGS...SEE THE ARCHITECTURAL DRAWINGS FOR ALL DIMENSIONING REQUIREMENTS FOR THE PROJECT !!!!

SEE THE MECHANICAL PROJECT DRAWINGS FOR THE EXACT LOCATION OF ALL MECHANICAL/PLUMBING APPLIANCES AND/OR EQUIPMENT !!!!

SPLIT BUS LOADCENTERS AND/OR PANELBOARDS ARE EXPRESSLY PROHIBITED FOR USE IN THE PROJECT WORK !!!!

PANEL: PR MAINS:100(MLO) BRACING: 10 Ka
TYPE: NOOB-4L MOUNTING: SURFACE
VOLTAGE: 120/208V,3P,4W/NEMA 1
CONNECTED LOAD:
A: 7100 B: 6400 C: 7700 = 21200 VA
PNL "PK" IS EXISTING !! or 64 AMPS

CKT	DESCRIPTION	BRK	AØ	BØ	CØ	BRK	DESCRIPTION	CKT
1	EXIST	1 20	500 300			1 20	EXIST	2
3				500 300				4
5					500 500			6
7			500 400					8
9				500 400				10
11					500 400			12
13			500 400					14
15				500 400				16
17					500 2000	2	EXIST	18
19			500 2000			50		20
21				500 1800		1 30	SIDE FLT	22
23	EXIST	2			2000	1	SPACE	24
25		50	2000					26
27	EXIST	2		1500				28
29		50			1500			30
31								32
33								34
35								36
37								38
39								40
41								42

ELECTRICAL SCHEDULES

ELECTRICAL SYMBOLS
(USE APPLICABLE SYMBOLS ONLY)

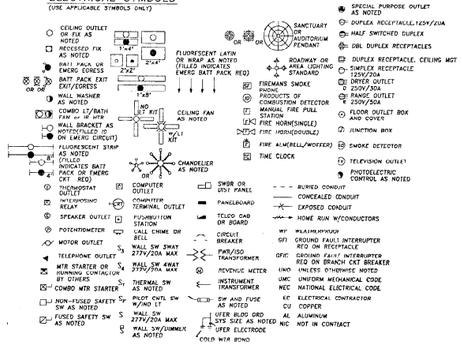

INFRASTRUCTURE WIRING SYSTEMS FOR THIS PROJECT SHALL CONSIST OF NON-COMBUSTIBLE RACEWAY/BOXES/SURFACE RACEWAY DEVICES..ONLY NON-COMBUSTIBLE CABLE AND WIRING MATERIALS SHALL BE INSTALLED AS PART OF THE PROJECT ELECTRICAL WORK.
ALL WIRING METHODS SHALL CONFORM FULLY TO THE INSTALLATION RULES OF THE CITY OF LAS VEGAS NEVADA !!

CLARK COUNTY
General Services Department
Facilities Services Division
225 Bridger Avenue
Las Vegas, Nevada 89155
(702) 455-4616

Date: 23 SEPTEMBER 1992
Project No: 5224
Drawn By: FUA
Designed By: FUA
Approved By: FUA

PROJECT: BRIDGER BUILDING
COOLING TOWER REPLACEMENT
225 BRIDGER AVENUE, LAS VEGAS, NV

SHEET TITLE: ELECTRICAL PLANS
ONE LINE/SCHEDULES/ETC.

SHEET
E1
OF
1 1609

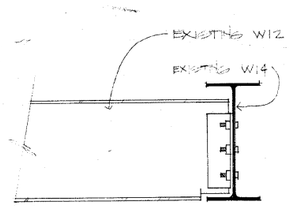

A / S-1 W12 TO W14 CONNECTION
SCALE: 1 1/2" = 1'-0"

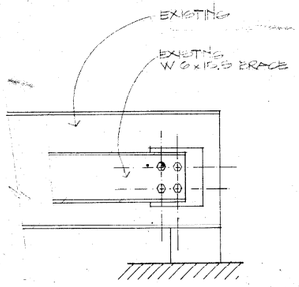

B / S-1 CORNER POST @ SOUTH
SCALE:

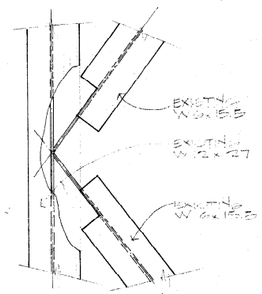

C / S-1 CENTER DETAIL

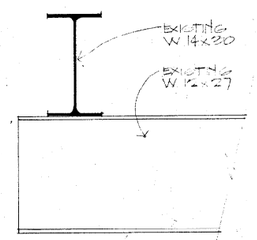

D / S-1 W12 TO W14 CONNECTION

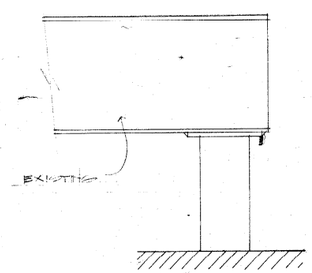

E / S-1 CORNER POST @ NORTH
SCALE: 1 1/2" = 1'-0"

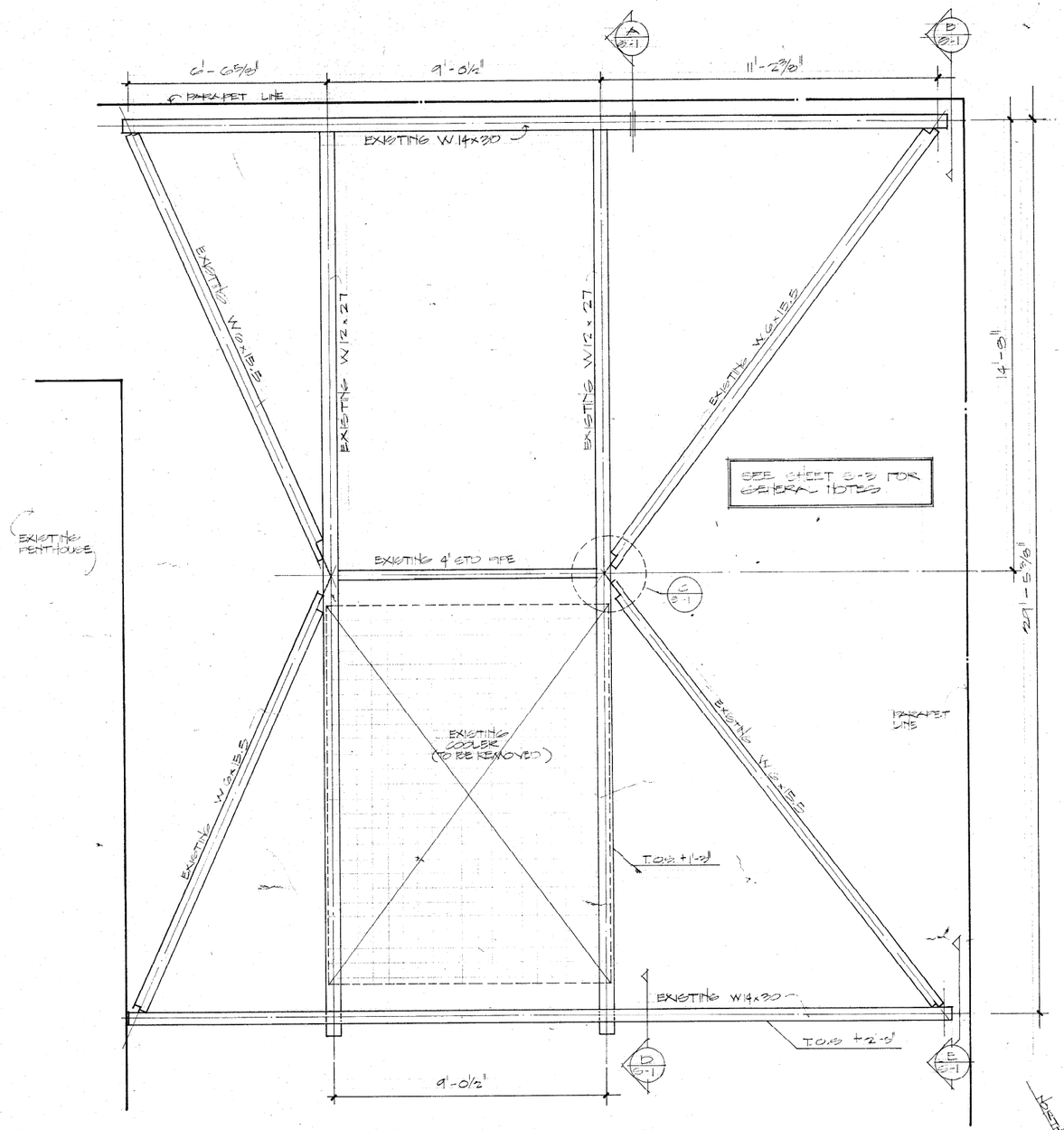

1 / S-1 EXISTING FRAMING PLAN @ BRIDGER BUILDING ROOF
SCALE: 1/2" = 1'-0"

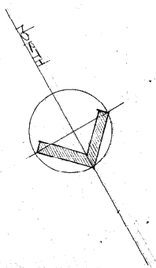

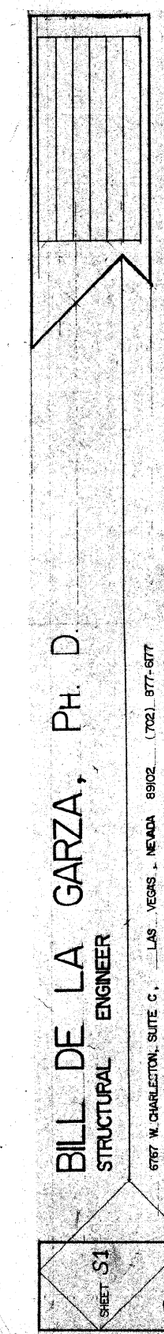

BILL DE LA GARZA, PH. D.
STRUCTURAL ENGINEER
6767 W. CHARLESTON, SUITE C, LAS VEGAS, NEVADA 89102 (702) 877-6177

SHEET S1 OF 3 SHEETS

1609

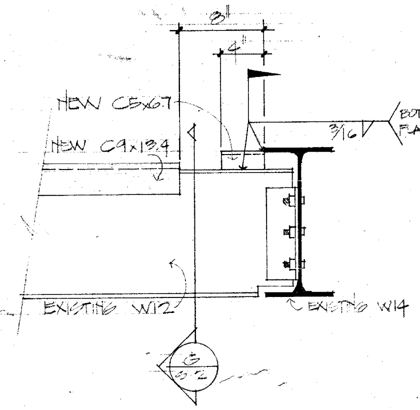

F BASE BID
S-2 SC 1 1/2" = 1'-0"

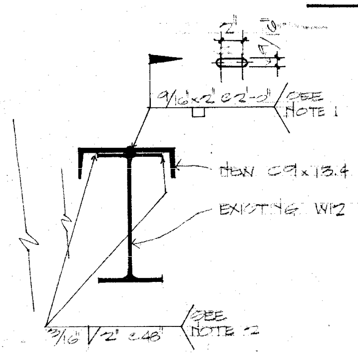

G BASE BID
S-2 SC. 1 1/2" = 1'-0"

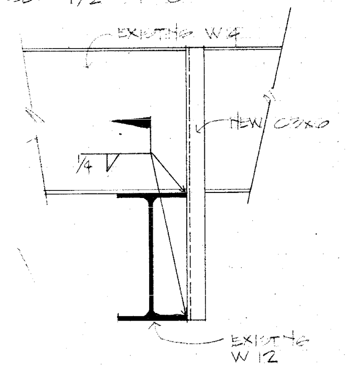

H BASE BID
S-2 SC 1 1/2" = 1'-0"

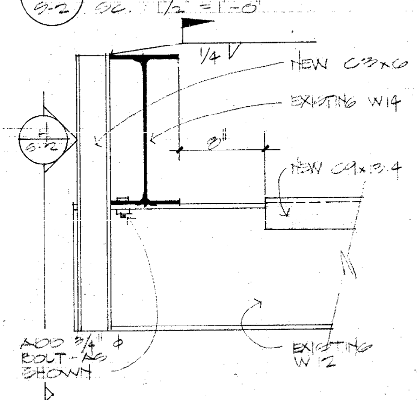

J BASE BID
S-2 SC. 1 1/2" = 1'-0"

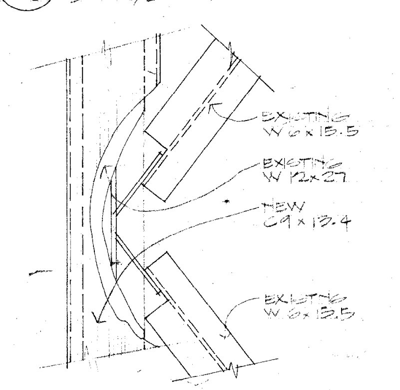

K BASE BID
S-2 SC 1 1/2" = 1'-0"

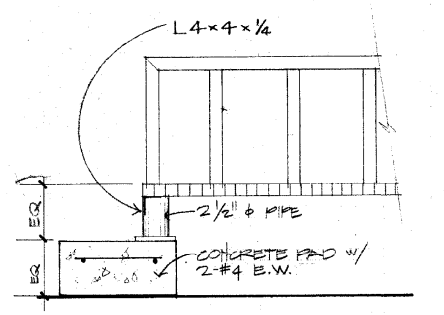

L STAIR & WALKWAY (ALT "3")
S-2 SC.: 1 1/2" = 1'-0"

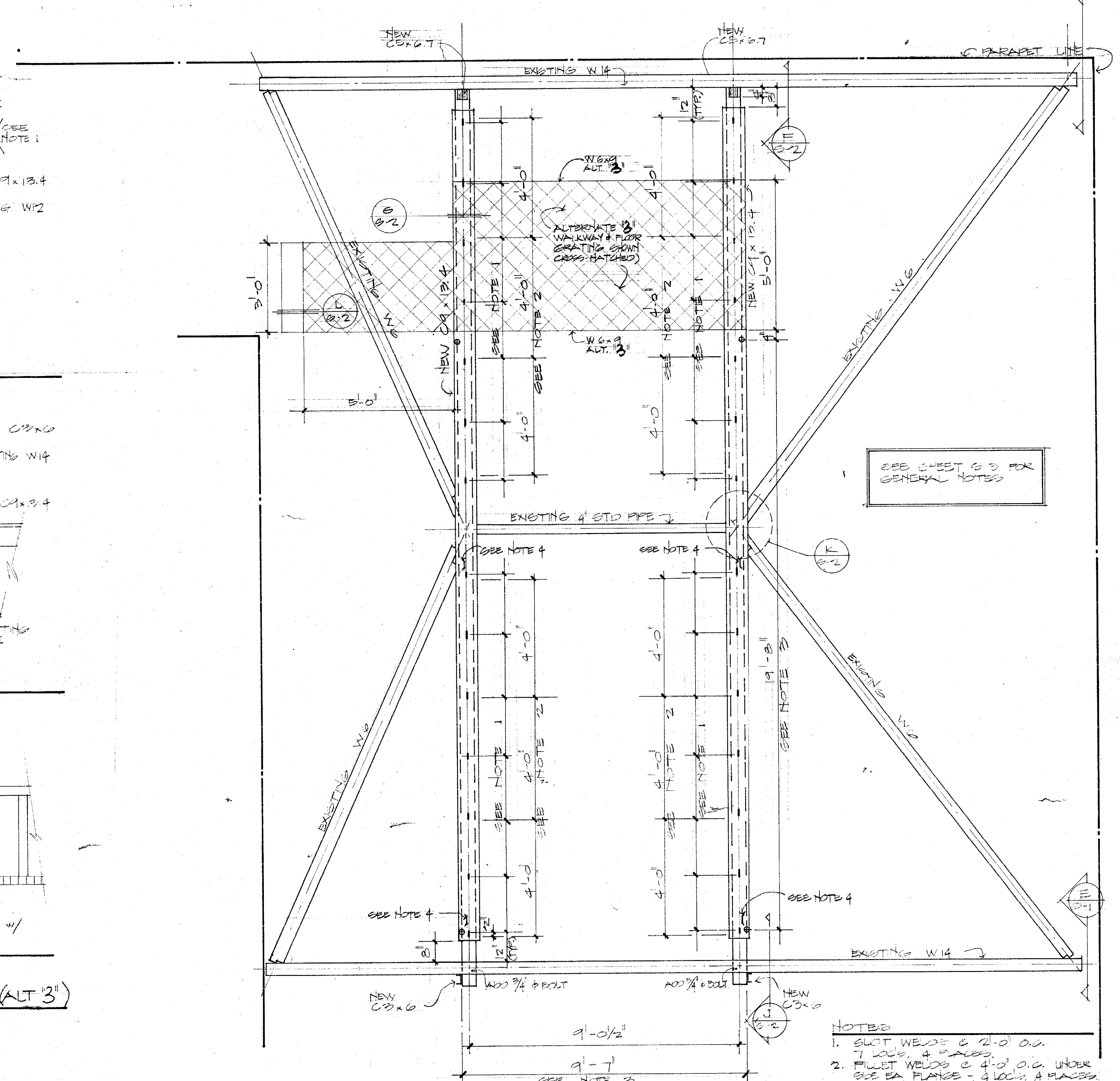

SEE SHEET S-3 FOR GENERAL NOTES

NOTES
1. SLOT WELDS @ 2'-0" O.C. 7 LOCS, 4 PLACES.
2. FILLET WELDS @ 4'-0" O.C. UNDER SIDE EA. FLANGE - 4 LOCS, 4 PLACES.
3. MOUNTING HOLES (4) FOR NEW COOLER
4. REMOVE EXISTING PL CONNECTORS FROM OLD COOLER MOUNT. TYPICAL OF FOUR PLACES (DENOTES APPROX. LOCATION.)

I FRAMING PLAN @ BRIDGER BUILDING ROOF
S-2 SC. 1/2" = 1'-0"

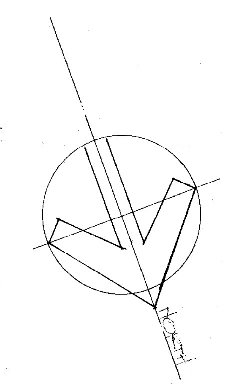

BILL DE LA GARZA, PH. D.
STRUCTURAL ENGINEER
5767 W. CHARLESTON, SUITE C, LAS VEGAS, NEVADA 89102 (702) 877-6177

SHEET S2
3 OF SHEETS

1609

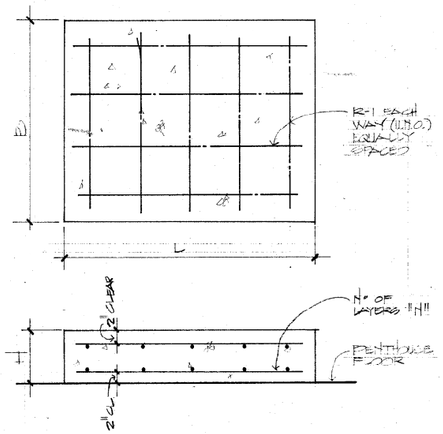

PAD	B	L	H	N	R-1
PAD 1	4'-0"	4'-0"	8"	1	3-#3 E.W.
PAD-2	2'-0"	2'-0"	4"	1	2-#3 E.W.
PAD-3	1'-0"	2'-0"	10"	2	2-#4 LONG BARS 2-#4 SHORT BARS

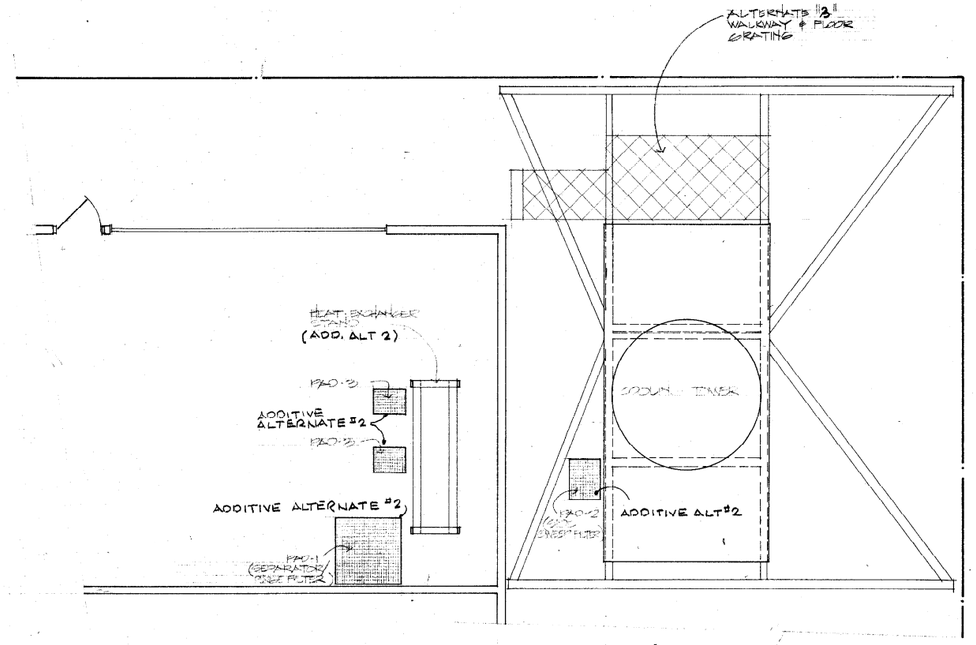

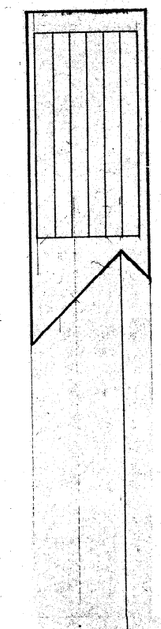

3 CONCRETE PADS (ADD. ALT. #2)
S-3 N.T.S.

1 CONCRETE PADS & HEAT EXCHANGER STAND LOCATION PLAN - PENTHOUSE ROOF
S-3 SCALE: 1/4" = 1'-0"

GENERAL NOTES

1. IT SHALL BE THE CONTRACTOR'S SOLE RESPONSIBILITY TO COORDINATE THESE DRAWINGS WITH THE MECHANICAL DRAWINGS.

   DIMENSIONS SHALL BE VERIFIED AND ESTABLISHED PRIOR TO THE START OF ANY CONSTRUCTION OR FABRICATION.

   THE ENGINEER MUST BE NOTIFIED OF CONFLICTS, DISCREPANCIES OR INCONSISTENCIES PRIOR TO ANY WORK BEING PERFORMED THAT WOULD BE AFFECTED BY THESE ITEMS.

   AFTER REMOVAL AND DEMOLITION OF EXISTING HARDWARE THE STEEL FRAME THAT IS TO BE RE-USED SHALL BE CLEANED IN THE AREA OF NEW STEEL. ALL ROOFING SPATTER AND EXISTING PAINT SHALL BE REMOVED DOWN TO ORIGINAL STEEL. THE NEW STEEL AND OLD CLEANED STEEL SHALL BE RE-PAINTED TO MATCH.

2. THE WORK SHALL CONFORM TO THE REQUIREMENTS OF THE 1991 EDITION OF THE UNIFORM BUILDING CODE.

3. STEEL SHOP DRAWINGS SHALL BE SUBMITTED FOR APPROVAL PRIOR TO FABRICATION.

   STEEL SHALL CONFORM TO THE ASTM SPECIFICATION A-36, WITH A MINIMUM YIELD STRENGTH OF 36 KSI.

   WELDING SHALL CONFORM TO THE REQUIREMENTS OF THE AWS CODE. ALL WELDS SHALL USE E70XX ELECTRODES.

   ANY CUTTING OR REMOVAL OF EXISTING MATERIAL THAT CUTS OR GOUGES INTO THE EXISTING MATERIAL SHALL BE REPAIRED BY FILLING THE DAMAGED AREAS WITH WELD METAL AND GROUND TO ITS ORIGINAL SURFACE.

4. CONCRETE SHALL CONFORM TO THE REQUIREMENTS OF THE ACI CODE OR CHAPTER 28 OF THE UBC. CONCRETE SHALL HAVE A 28-DAY STRENGTH OF 3000 PSI.

   REINFORCING STEEL SHALL CONFORM TO THE REQUIREMENTS OF ASTM A-615, GRADE 60.

   A BOND BREAKER OR OTHER SUITABLE MATERIAL SHALL BE USED BETWEEN ANY CONCRETE WORK AND THE EXISTING ROOF.

   REDHEAD BOLTS SHALL BE STAINLESS STEEL, MINIMUM 5 1/2 INCHES LONG.

5. ALTERNATE "A" IS A SEPARATE BID ITEM. THE GRATING INSTALLATION SHALL BE DESIGNED TO SPAN 5 FEET AND SHALL INCLUDE TOE BOARDS AT ALL EDGES EXCEPT AT THE ENTRY. THE FLOOR GRATING AREA SHALL BE ENCLOSED WITH RAILINGS THAT CONFORM TO OSHA REQUIREMENTS AND THE RAILINGS SHALL ENCLOSE THE TWO SIDES AND THE REAR OF THE AREA.

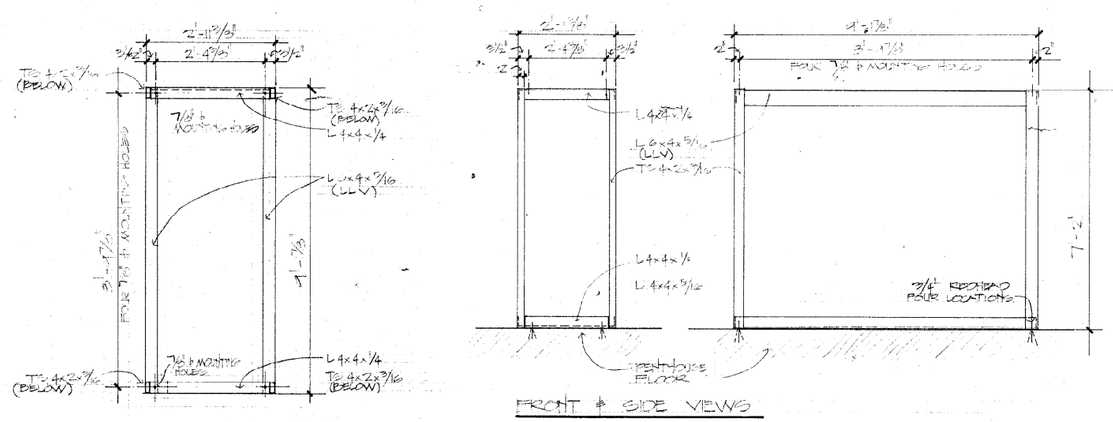

2 HEAT EXCHANGER STAND (ADDITIVE ALTERNATE #2)
S-3

BILL DE LA GARZA, PH. D.
STRUCTURAL ENGINEER
6757 W. CHARLESTON, SUITE C, LAS VEGAS, NEVADA 89102 (702) 877-6177

SHEET S3 OF 3 SHEETS

1609