CHIMNEY CHASE CONNECTION DETAIL

THIS DETAIL IS FOR CHIMNEYS 2'X4'X10' HIGH MAXIMUM. PROVIDE ENGINEER'S CALCULATIONS FOR LARGER SIZES.

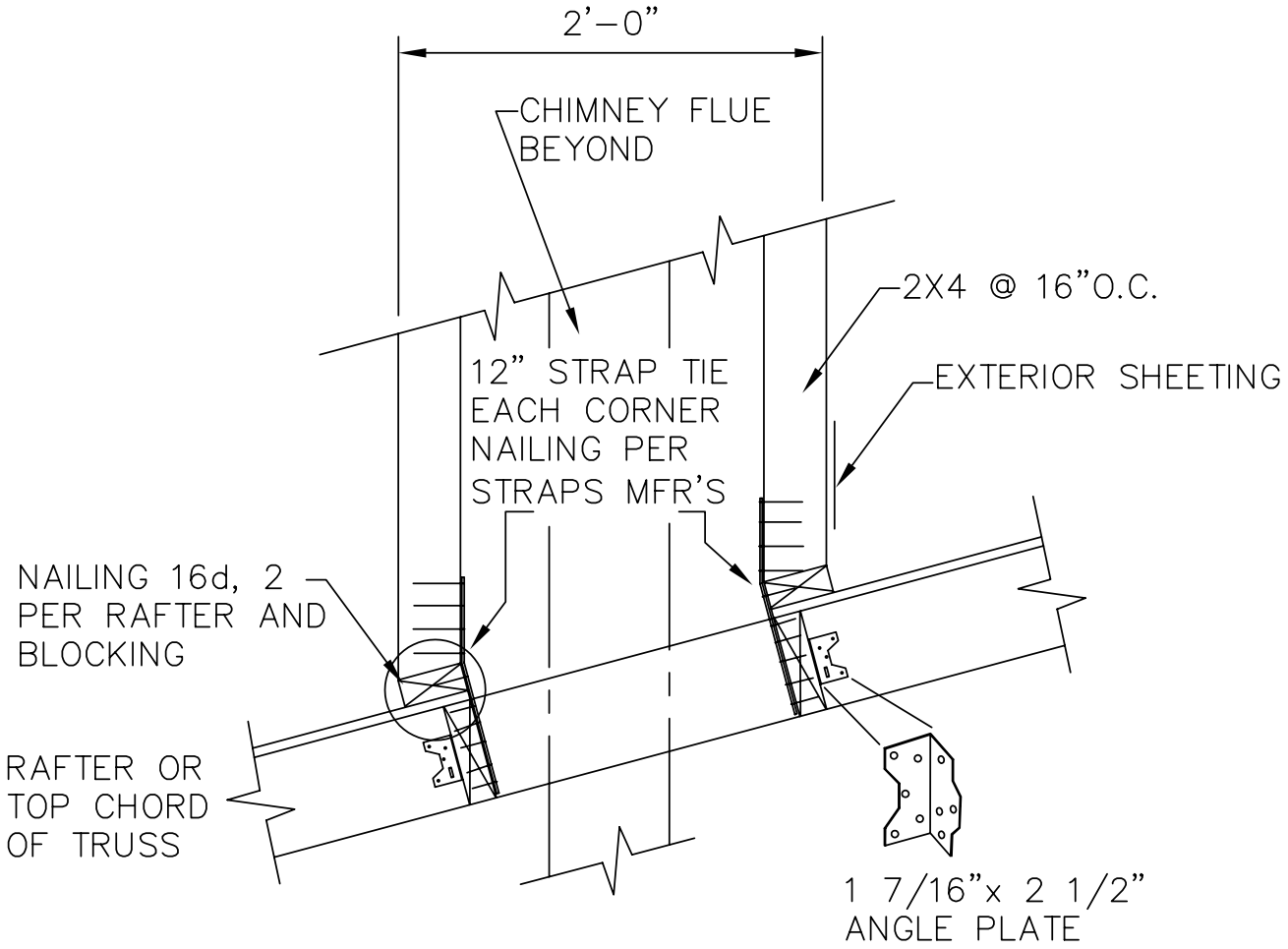

TRUSS AND FULL-DEPTH 2" BLOCKING