SOUTHERN NEVADA BUILDING OFFICIALS REGIONAL STANDARDS	B-120-4 11-02-05 Pg. 1 of 1

TOWNHOUSE-TWO ONE HOUR WALLS

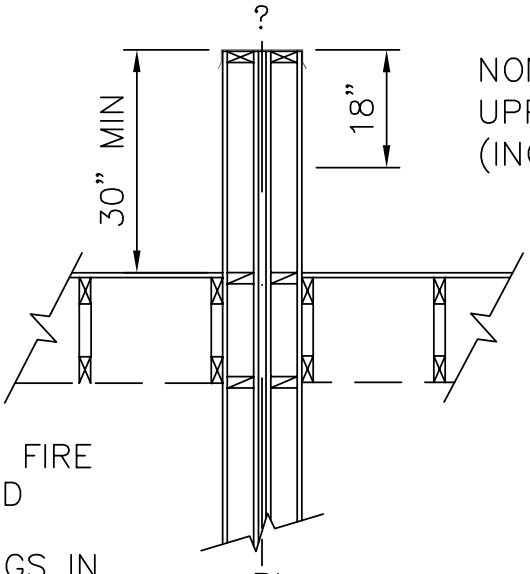

NON–COMBUSTIBLE FACING UPPER 18" MIN.–BOTH SIDES (INCLUDING COPING)

PARALLEL FRAMING

NO ROOF OR CEILING FIRE PROTECTION REQUIRED

LOCATION OF OPENINGS IN THE ROOF PER THE PLUMBING AND MECHANICAL CODES

TRUSSES JOISTS OR RAFTERS SHALL NOT FRAME THROUGH THE WALL

FLOOR CEILING STC & IIC OF 50 OR BETTER

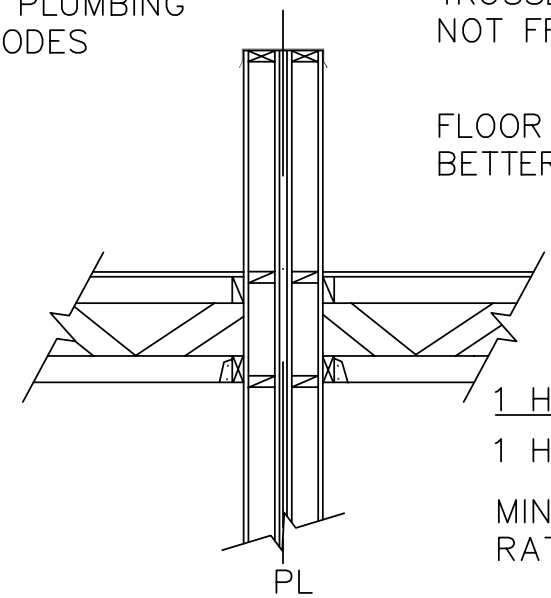

PERPENDICULAR FRAMING

1 HOUR WALL CONSTRUCTION

1 HOUR LISTED ASSEMBLY

MINIMUM STC 50 SOUND RATING

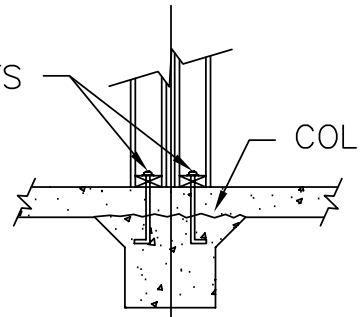

ANCHOR BOLTS PER PLAN

COLD JOINT OPTIONAL

FOR OPTIONAL 2 HOUR PARTY WALL SEE IRC SECTION R321.2.2, EXCEPTION

Clark County	Boulder City	Henderson	Las Vegas	Mesquite	North Las Vegas
Dept. of Develop. Services 4701 W Russell Rd Las Vegas NV 89118 (702) 455-3000	Building Department 401 California Avenue Boulder City, NV 89005 (702) 293-9282	Bldg & Fire Safety Dept. 240 Water St. Henderson, NV 89015 (702) 267-3650	Building & Safety Dept. 731 S. 4th Street Las Vegas, NV 89101 (702) 229-6916	Building Department 10 East Mesquite Blvd. Mesquite NV. 89027 (702) 346-2835	Building Department 2266 Civic Center Drive N. Las Vegas, NV 89030 (702) 633-1577