FIRE WALL - WOOD OR LIGHT GUAGE METAL CONST. TO COMPLY WITH IBC CHAPTER 7

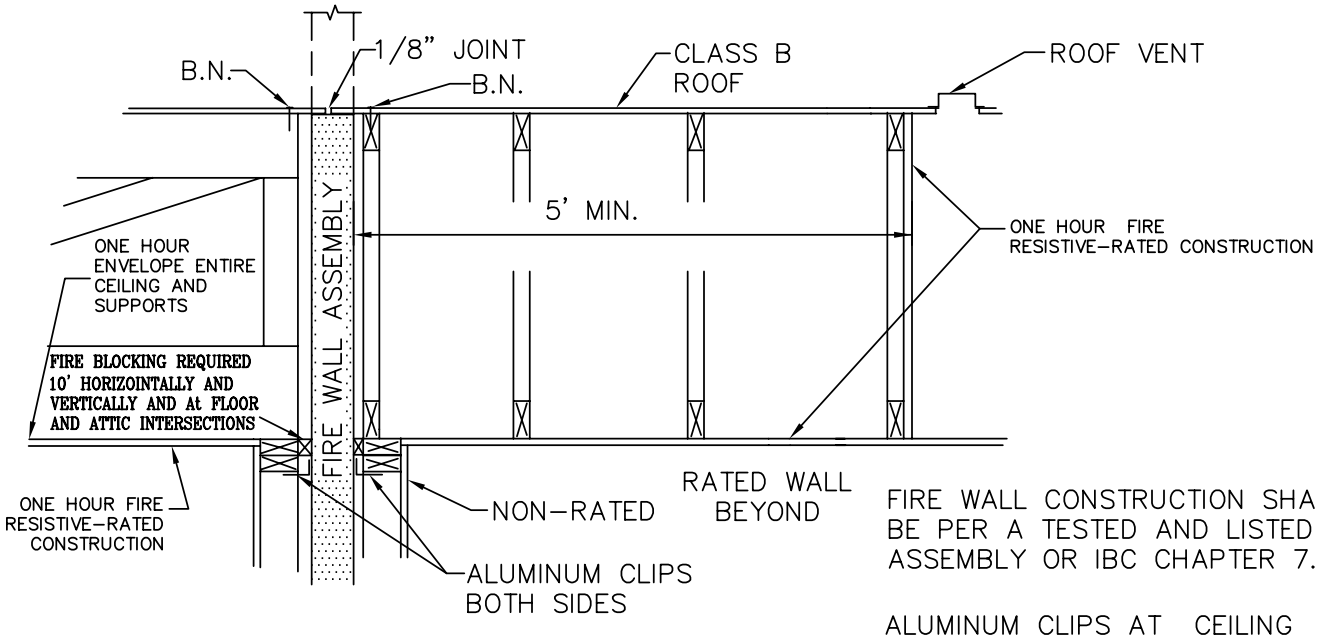

PERPENDICULAR FRAMING
(THIS SIDE MAY BE DELETED)

PARALLEL FRAMING

FIRE WALL CONSTRUCTION SHALL BE PER A TESTED AND LISTED ASSEMBLY OR IBC CHAPTER 7.

ALUMINUM CLIPS AT CEILING LEVELS. GAUGE AND SPACING ALONG THE WALL PER ENGINEER'S CALCULATIONS.

DETAIL SHEAR TRANSFER FROM ROOF SHEATHING TO SHEAR WALLS.

ROOF/CEILING CROSS SECTION

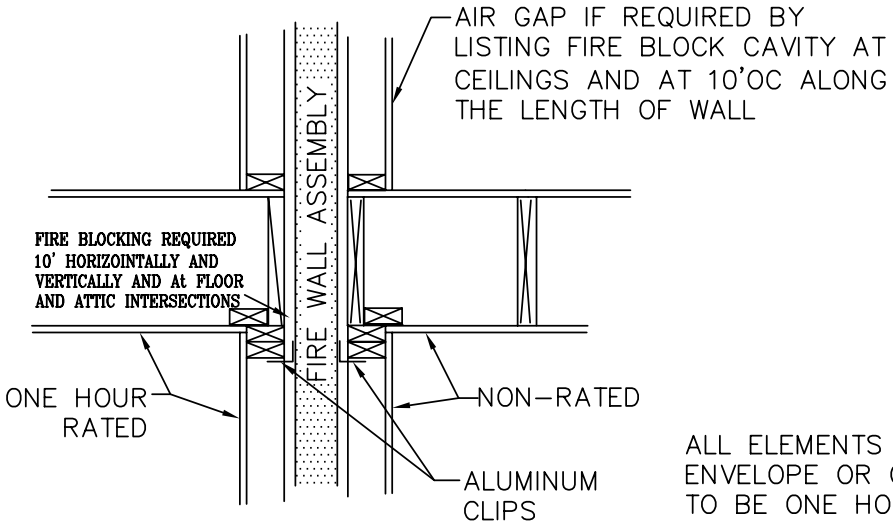

PERPENDICULAR FRAMING

PARALLEL FRAMING

ALL ELEMENTS SUPPORTING ENVELOPE OR ON RATED ROOF TO BE ONE HOUR FIRE RESISTIVE-RATED. (SEE B-122-2 FOR DETAILS)

IF PROPERTY LINE WALL IS BETWEEN UNITS NO OPENINGS ARE PERMITTED (IBC SECTION 503.2)

FLOOR/CEILING CROSS SECTION

FIRE WALL TERMINATION - PLAN VIEW

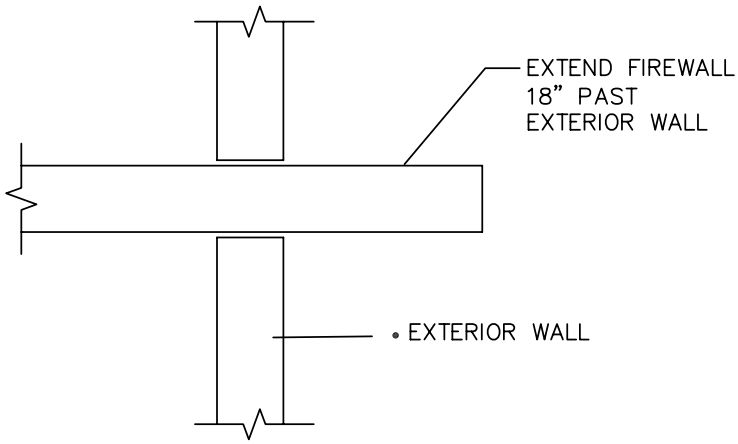

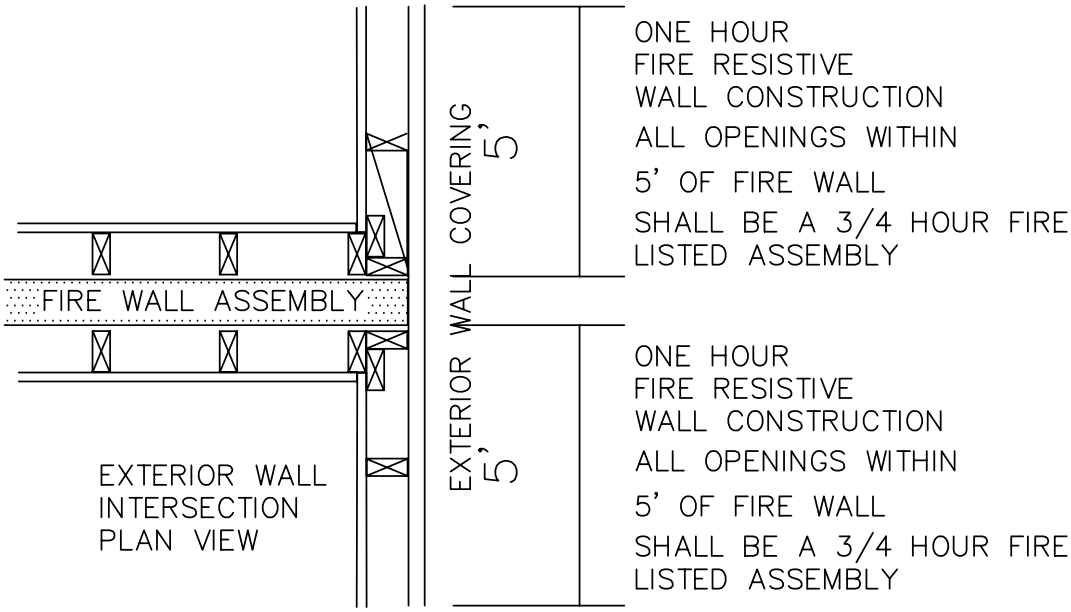

ALL ELEMENTS SUPPORTING ENVELOPE OR RATED ROOF
TO BE ONE HOUR FIRE RESISTIVE CONSTRUCTION
IF THIS IS A PROPERTY LINE WALL NO OPENINGS ARE PERMITED
SECTION 503.2 , INTERNATIONAL BUILDING CODE