LPG PIPING-UNDERGROUND BENEATH BUILDINGS

Clark County	Boulder City	Henderson	Las Vegas
Dept. of Develop. Services 4701 W Russell Rd Las Vegas, NV 89118 (702) 455-3000	Building Department 401 California Avenue Boulder City, NV 89005 (702) 293-9282	Bldg & Fire Safety Dept. 240 Water Street Henderson, NV 89015 (702) 267-3650	Building & Safety Dept. 731 S. 4th Street Las Vegas, NV 89101 (702) 229-6916

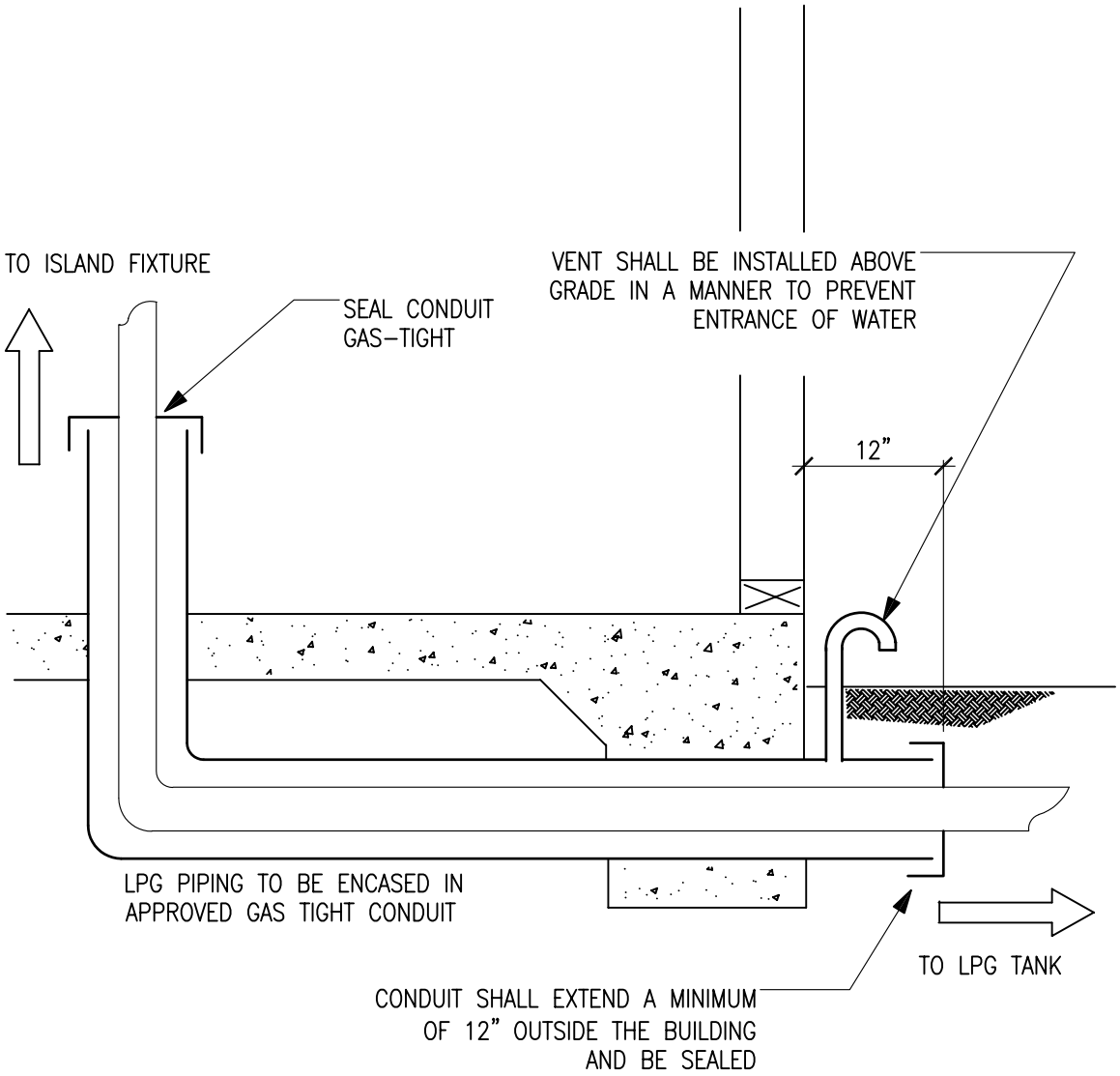

- ALL PIPE UNDER SLAB SHALL BE CAPABLE OF BEING REMOVED OR REPLACED. (SNPMA 12.11.1.6)

Mesquite	North Las Vegas	Pahrump	
Building Department 10 East Mesquite Blvd. Mesquite, NV 89027 (702) 346-2835	Building Department 2240 Civic Center Drive N. Las Vegas, NV 89030 (702) 633-1577	Regional Planning District 1210 E. Basin Avenue, Suite #1 Pahrump, NV 89060 (775) 751-3373	