DEPARTMENT OF PUBLIC WORKS

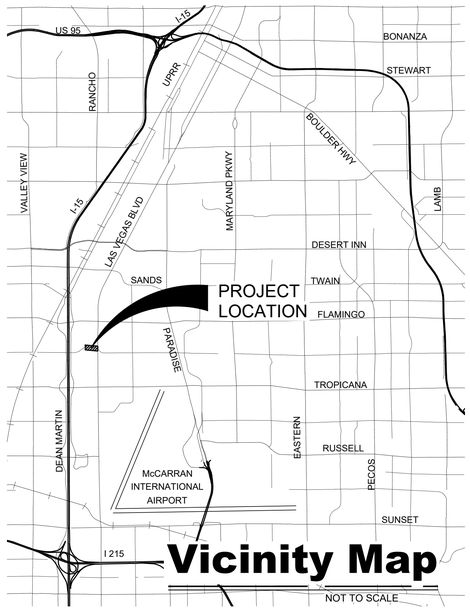

Vicinity Map

Index of Sheets

1	CV	COVER SHEET
2	C-1	CONSTRUCTION & REMOVAL PLAN
3	DT-1	DETAILS SHEET
4	T-1	TRAFFIC SIGNAL

County Commissioners

Marilyn Kirkpatrick, Chair
James B Gibson, Vice Chair
Justin C Jones
William McCurdy II
Ross Miller
Michael Naft
Tick Segerblom

County Manager

Yolanda T King

Director of Public Works

Approved:

Denis Cederburg

2021
HARMON AVENUE IMPROVEMENTS
SIDEWALK INSTALLATION LV BLVD TO CITY CENTER

FUNDED BY
CLARK COUNTY

AGENCY	PLANS REVIEWED BY	DATE
CENTRAL TELEPHONE COMPANY: DBA CENTURYLINK		
LAS VEGAS VALLEY WATER DISTRICT		
SOUTHWEST GAS CORPORATION		
NV ENERGY COMPANY [TRANSMISSION]		
NV ENERGY COMPANY [DISTRIBUTION]		
CLARK COUNTY WATER RECLAMATION DISTRICT		
COX COMMUNICATIONS, LAS VEGAS, INC		

DEPARTMENT OF PUBLIC WORKS	BY	DATE
DEPUTY DIRECTOR		
DEPUTY DIRECTOR		
DEPUTY DIRECTOR		
DESIGN ENGINEERING DIVISION		
CONSTRUCTION MANAGEMENT DIVISION		
ROAD DIVISION		
TRAFFIC MANAGEMENT DIVISION		
COUNTY SURVEYOR'S OFFICE		
DEVELOPMENT REVIEW DIVISION		

REVISIONS

NUMBER	DESCRIPTION	DATE

PROFESSIONAL ENGINEER - STATE OF NEVADA
KAIZAD YAZDANI
Exp. 06-30-2022
CIVIL
No. 15520

9/27/2021

TRAFFIC MANAGEMENT DIVISION

COVER SHEET

L-2302

HARMON AVENUE IMPROVEMENTS-SIDEWALK INSTALLATION LV BLVD TO CITY CENTER

100% DESIGN - NOT FOR CONSTRUCTION

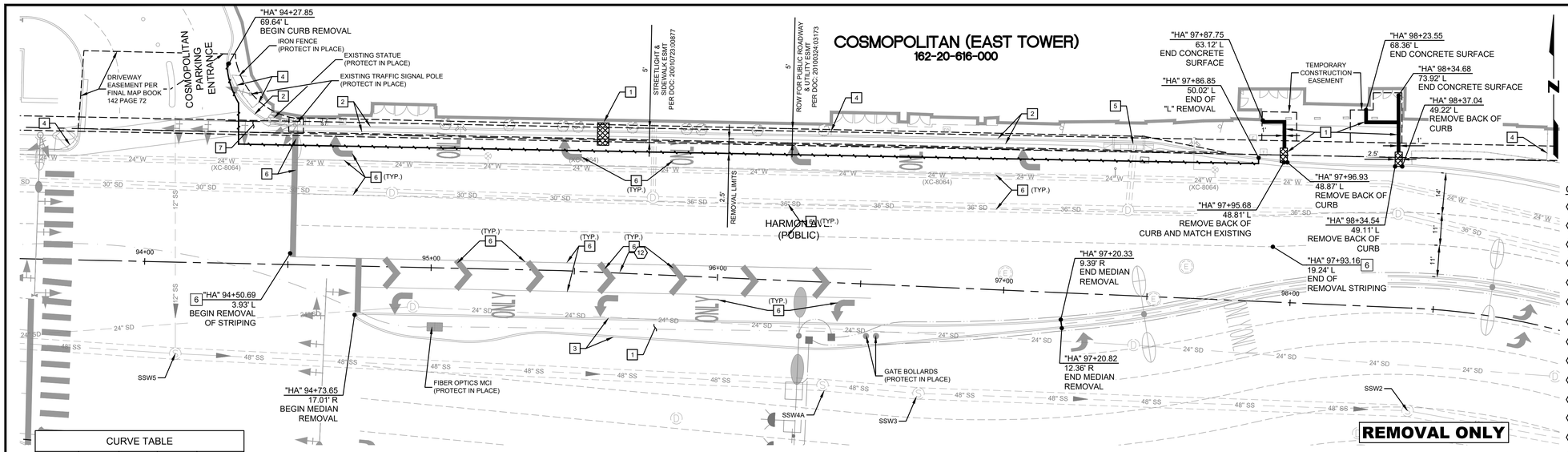

CURVE TABLE				
CURVE #	LENGTH	RADIUS	DELTA	TANGENT
C1	12.18'	20.00'	034°53'49"	6.29'
C2	25.97'	27.00'	055°06'45"	14.09'
C3	21.71'	23.00'	054°05'20"	11.74'
C4	174.37'	699.50'	014°16'58"	87.64'
C5	12.90'	39.50'	018°42'20"	6.51'
C6	12.28'	4.50'	156°19'41"	21.47'
C7	55.48'	1800.50'	001°45'56"	27.74'
C8	15.76'	100.50'	008°59'07"	7.90'
C9	12.95'	99.50'	007°27'29"	6.48'

LINE TABLE		
LINE #	LENGTH	DIRECTION
L1	293.02'	N88°54'24"W
L2	330.73'	N88°54'24"W
L3	38.04'	N81°21'17"W
L4	210.37'	N88°30'24"W
L5	4.85'	N34°53'49"W

HARMON AVE

SCALE: HORIZ. 1" = 20'

GRAPHIC SCALE

20 0 10 20 40

(IN FEET)
1 inch = 20 ft.

REMOVAL NOTES

1. REMOVE CONCRETE
2. REMOVE "L" TYPE CURB AND GUTTER
3. REMOVE "A" TYPE CURB
4. REMOVE, SALVAGE, AND DELIVER IRON FENCE TO COSMOPOLITAN LAS VEGAS
5. REMOVE DROP-INLET
6. REMOVE STRIPING
7. REMOVE CONCRETE SPANDREL

CONSTRUCTION NOTES

1. SAWCUT AND MATCH EXISTING CONDITIONS
2. CONSTRUCT TYPE L CURB AND GUTTER PER USDCCA STD. DWG NO. 216
3. CONSTRUCT "A" TYPE CURB PER USDCCA STD. DWG. NO. 219
4. CONSTRUCT CONCRETE SIDEWALK PER USDCCA STD. DWG NO. 234
5. CONSTRUCT TYPE I ADA SIDEWALK RAMP WITH TRUNCATED DOME PER USDCCA STD. DWG NO. 235
6. CONSTRUCT SIDEWALK UNDERDRAIN PER USDCCA STD. DWG NO. 236
7. INSTALL TYPE 10' "CM2" DROP INLET PER USDCCA STD. DWG NO. 412.1 & 421
8. INSTALL MEDIAN NOSE MARKING PER DETAIL 4 ON SHEET DT-1
9. INSTALL TYPE 4 LANE LINE PER USDCCA DWG. NO. 244.1 (RPM)
10. INSTALL 24-INCH WHITE CROSSWALK/STOP BAR PER USDCCA DWG. NO. 254 (THERMOPLASTIC)
11. INSTALL WHITE PAVEMENT MARKING ARROW (THERMOPLASTIC)
12. INSTALL STORAGE LANE LINE PER USDCCA DWG. NO. 246.6 (RPM)
13. VERTICALLY ADJUST STORM DRAIN MANHOLE PER USDCCA DWG. NO. 404.1 AND 408.1
14. EXISTING 2" CONDUIT (PROTECT IN PLACE)
15. INSTALL CONCRETE MEDIAN SURFACE PER USDCCA DWG. NO. 218
16. INSTALL DURANTRENCH SYSTEM OR EQUIVALENT PER DETAIL 3 ON SHEET DT-1
17. VERTICALLY ADJUST FIRE HYDRANT TO FINISH GRADE PER UDACS PLATE NO. 40 (IF IMPACTED)
18. VERTICALLY ADJUST PULLBOX TO FINISHED GRADE
19. INSTALL CONCRETE CROSS GUTTER SPANDREL
20. INSTALL BLUE REFLECTIVE RAISED PAVEMENT MARKER IN THE CENTER OF THE NEAREST DRIVE LANE TO THE FIRE HYDRANT
21. EXISTING ADVANCE WARMING FLASHER (PROTECT IN PLACE)

LEGEND

- PROPOSED CONCRETE SURFACE
- TRENCH SECTION
- SIDEWALK UNDERDRAIN

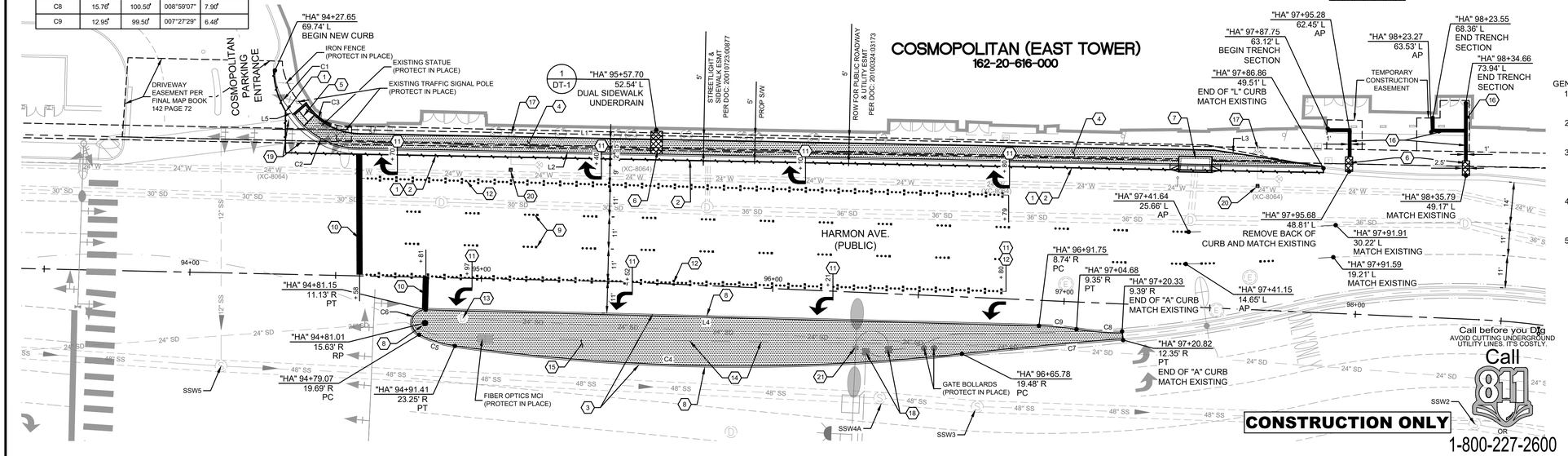

GENERAL NOTES:

1. ALL SUBSURFACE UTILITIES TO BE PROTECTED IN PLACE SHALL BE ACCESSIBLE AT ALL TIME.
2. FOR PAVEMENT INFORMATION SEE TYPICAL SECTIONS ON SHEET DT-1
3. EXISTING STRIPING AND RPM's IN CONFLICT WITH PROPOSED IMPROVEMENTS SHALL BE REMOVED AND SHALL BE PAID FOR ON A LUMP SUM BASIC. ALL RPM's IN AREAS OF MILLING ARE TO BE REMOVED.
4. PROTECT IN PLACE EXISTING WATERLINE(S). MAINTAIN MINIMUM 12" VERTICAL SEPARATION BETWEEN THE WATERLINE(S) AND CONDUITS.
5. ALL EXISTING UTILITIES SHOWN HEREIN ARE APPROXIMATE ONLY. IT SHALL BE THE CONTRACTOR RESPONSIBILITY TO DETERMINE THE EXACT LOCATION OF ALL EXISTING UTILITIES TO DETERMINE THE EXACT VERTICAL AND HORIZONTAL LOCATION PRIOR TO COMMENCING CONSTRUCTION. ALL EXISTING UTILITIES SHALL BE PROTECT UNLESS OTHERWISE NOTED.

Call before you Dig
AVOID CUTTING UNDERGROUND UTILITY LINES. IT'S COSTLY.
Call 811 OR 1-800-227-2600

FAST
Call before you UnderGround
1-702-432-5300
FREEWAY AND ARTERIAL SYSTEM OF TRANSPORTATION

AVOID HITTING OVERHEAD POWER LINES. IT'S COSTLY.
CALL BEFORE YOU DO OVERHEAD
1-702-227-2929

HCC PP DWG

REV No	DATE	DESCRIPTION	APPROVED

CLARK COUNTY NEVADA

HARMON AVENUE IMPROVEMENTS

CONSTRUCTION & REMOVAL PLAN
SIDEWALK AND STORM DRAIN INSTALLATION
CLARK COUNTY, NEVADA, DEPARTMENT OF PUBLIC WORKS

PROFESSIONAL ENGINEER STAMP — KAIZAD YAZDANI — NEVADA — Exp. 06-30-2022 — CIVIL — No. 15520 — 9/27/2021

DESIGNED BY:	HF
DRAWN BY:	HF
CHECKED BY:	JB/KY
DATE:	October 6, 2021

SCALE	
HORIZ:	1" = 20'
VERT:	NONE
FIELD BOOK	NONE
WORK ORDER	NONE
PROJECT No.	NONE

SHEET No **C-1**

2 OF 4

L-2302

HARMON AVENUE IMPROVEMENTS - SIDEWALK INSTALLATION LV BLVD TO CITY CENTER

100% DESIGN - NOT FOR CONSTRUCTION

P:\TRAFFIC DIV\SIGNS\DESIGN\3 PROJECTS\PM & SW HARMON AND CITY CENTER\DESIGN AND SPECS\CAD\ WORKING FOLDER\PRODUCTION\HCC PP DWG - BERT

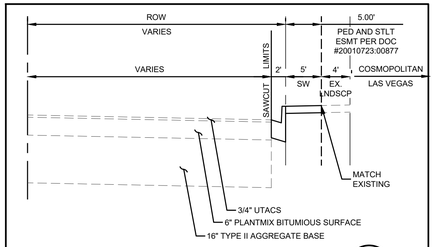

HARMON AVE - TYPICAL SECTION

A
-

NTS

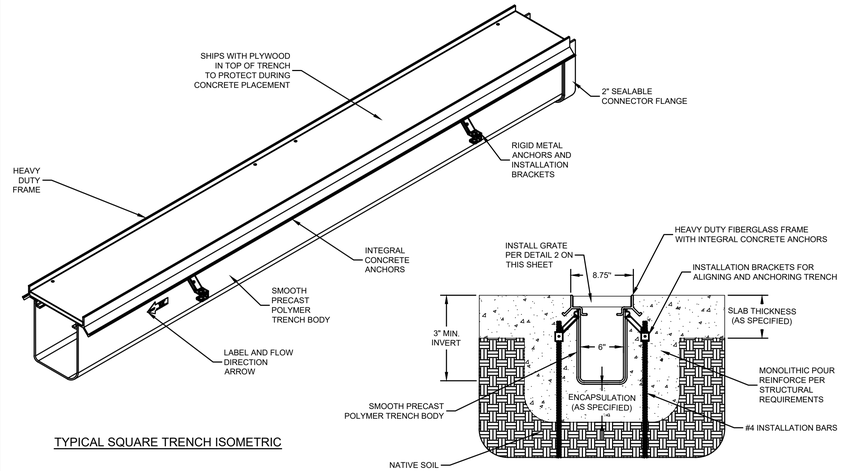

TYPICAL SQUARE TRENCH ISOMETRIC

NOTES:
1. STANDARD SLOPE IS 0.5% UNLESS OTHERWISE SPECIFIED
2. REINFORCE ACCORDING TO STRUCTURAL REQUIREMENTS
3. TRENCH DRAIN MUST BE $\frac{1}{4}$" BELOW FINISHED CONCRETE GRADE

TYPICAL SQUARE TRENCH SECTION

SLOTTED DRAIN SYSTEM

3
-

NTS

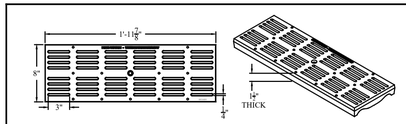

ADA AND HEEL PROOF GRATE

ISOMETRIC VIEW

NOTES:

1. GRATE MATERIAL IS BRASS
2. GRATES ARE LOAD CLASS C, EXCEEDS H-20 LOADING
3. GRATES ARE ADA COMPLIANT AND HEEL PROOF
4. GRATES HAVE A CAST FINISH
5. GRATE OPEN AREA 26.52 IN.^{2}/LF

TYPICAL GRATE DETAIL

2
-

NTS

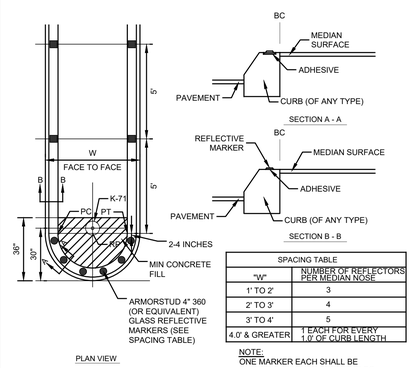

SPACING TABLE	
"W"	NUMBER OF REFLECTORS PER MEDIAN NOSE
1' TO 2'	3
2' TO 3'	4
3' TO 4'	5
4.0' & GREATER	1 EACH FOR EVERY 1.0' OF CURB LENGTH

NOTE:
ONE MARKER EACH SHALL BE PLACED 2-4 INCHES FROM THE PC AND THE PT OF THE MEDIAN NOSE; ALL OTHERS SPACED EQUALLY BETWEEN PT & PC

NOTES:
1. ENTIRE MEDIAN SHALL BE PAINTED WITH REFLECTIVE PAINT, OF SAME COLOR AS REFLECTIVE MARKERS, FROM THE MEDIAN NOSE BACK 5 FEET OR TO THE PC, WHICHEVER IS GREATER
2. REFLECTIVE PAVEMENT MARKERS USED ON MEDIAN SHALL CONFORM TO STD DWG No 247
3. ORIENTATION OF THE REFLECTIVE MARKERS FACES SHALL BE MADE IN THE FIELD TO ENSURE THAT MARKERS ARE AIMED AT APPROACHING VEHICLES TO BEST ADVANTAGE. ESPECIALLY IN HORIZONTALLY CURVED ROAD SECTIONS
4. REFLECTIVE PAVEMENT MARKERS ALONG MEDIAN LENGTH SHALL ONLY BE USED ON MEDIAN ISLANDS LESS THAN OR EQUAL TO FOUR (4) FEET IN WIDTH.

MEDIAN ISLAND NOSE MARKING

4
-

NTS

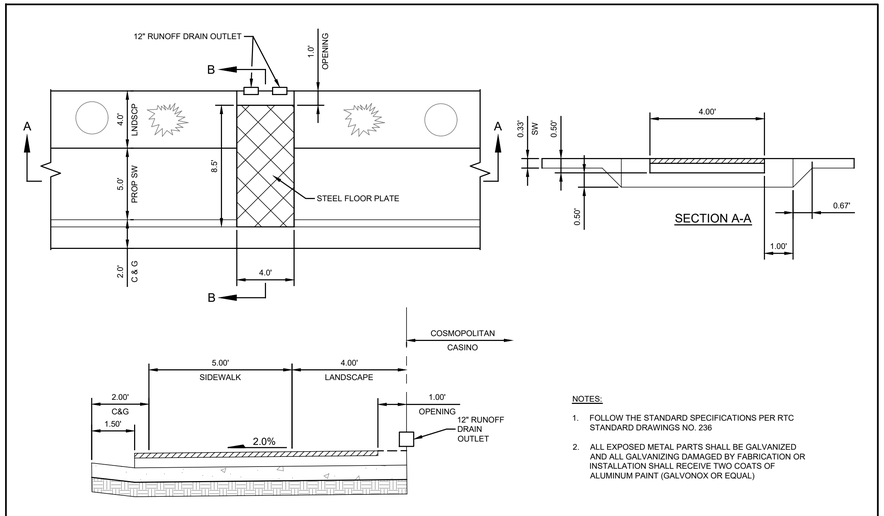

SECTION B-B

NOTES:

1. FOLLOW THE STANDARD SPECIFICATIONS PER RTC STANDARD DRAWINGS NO. 236
2. ALL EXPOSED METAL PARTS SHALL BE GALVANIZED AND ALL GALVANIZING DAMAGED BY FABRICATION OR INSTALLATION SHALL RECEIVE TWO COATS OF ALUMINUM PAINT (GALVONOX OR EQUAL)

DUAL SIDEWALK UNDERDRAIN

1
-

NTS

HCC DTL.DWG

REV No	DATE	DESCRIPTION	APPROVED

HARMON AVENUE IMPROVEMENTS

DETAILS SHEET

CLARK COUNTY, NEVADA, DEPARTMENT OF PUBLIC WORKS

PROFESSIONAL ENGINEER - STATE OF NEVADA
KAIZHONG YAO
Exp. 06-30-2022
No. 15520
CIVIL
9/27/2021

DESIGNED BY: HF
DRAWN BY: HF
CHECKED BY: JB/KY
DATE: October 6, 2021

SCALE	
HORIZ:	NONE
VERT:	NONE
FIELD BOOK	NONE
WORK ORDER	NONE
PROJECT No.	NONE

SHEET No
DT-1
3 OF 4
L-2302

HARMON AVENUE IMPROVEMENTS - SIDEWALK INSTALLATION LV BLVD TO CITY CENTER

100% DESIGN - NOT FOR CONSTRUCTION

P:\TRAFFIC DIV\SIGNS\DESIGN\3 PROJECTS\PM & SW HARMON AND CITY CENTER\DESIGN AND SPECS\CADD WORKING FOLDER\PRODUCTION\HCC DTL.DWG - BERT

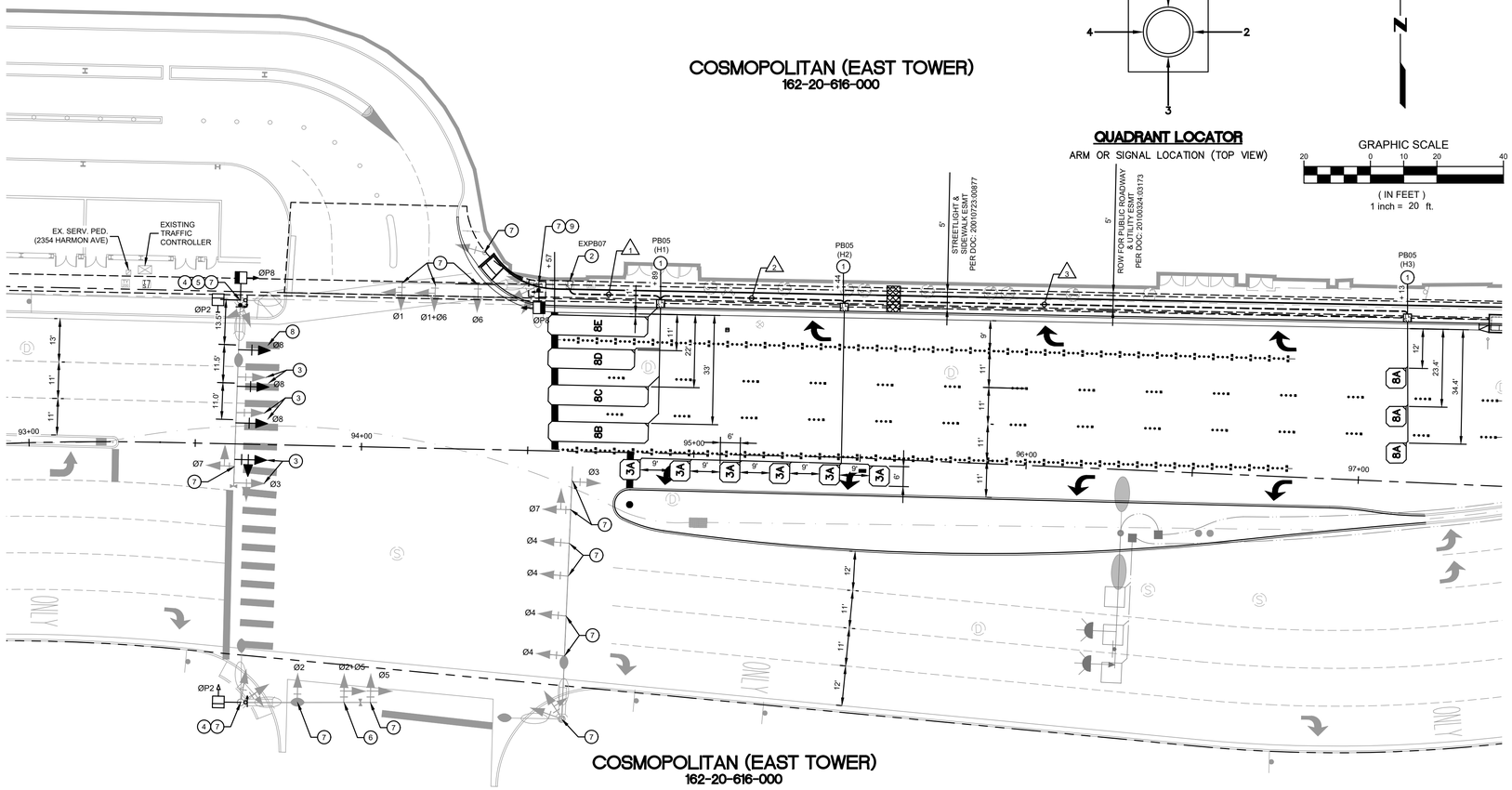

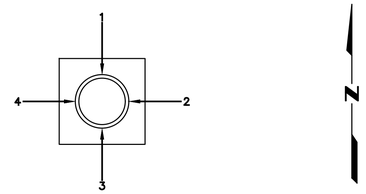

QUADRANT LOCATOR

ARM OR SIGNAL LOCATION (TOP VIEW)

GRAPHIC SCALE

20 0 10 20 40

(IN FEET)
1 inch = 20 ft.

TRAFFIC SIGNAL NOTES

1. INSTALL NEW PULLBOX (SIZE AS SHOWN)
2. INTERCEPT EXISTING CONDUIT AND EXTEND TO THE NEAREST P.B., POLE, OR SERVICE PEDESTAL LOCATION AS NEEDED
3. REMOVE EXISTING M-2 SIGNAL HEAD AND INSTALL NEW M-2 SIGNAL HEAD WITH RETRO-REFLECTIVE BORDER PER USDCCA STD. DWG. #840 AND #856 ON NEW TENON (SEE NOTE 10 AND 12)
4. REMOVE AND SALVAGE EACH PEDESTRIAN PUSH BUTTON AND INSTALL A POLARA NAVIGATOR 2 PEDESTRIAN PUSH BUTTON SYSTEM (OR APPROVED EQUIVALENT) INCLUDING REQUIRED CABINET EQUIPMENT (SEE NOTE 14)
5. REMOVE AND REPLACE EXISTING W-0T PED SIGNAL HEAD AND INSTALL NEW W-3T ON EXISTING POLE
6. REMOVE EXISTING TRAFFIC SIGNAL HEAD AND INSTALL NEW M-2A TRAFFIC SIGNAL HEAD WITH RETRO-REFLECTIVE BORDER PER USDCCA STD. DWG. #840 AND #855 ON EXISTING TENON.
7. REPLACE EXISTING BACKPLATES WITH REFLECTORIZED BACKPLATES (SEE DETAIL ON THIS SHEET)
8. INSTALL NEW M-2 SIGNAL HEAD (SEE NOTE 10 AND 13)
9. INSTALL NEW W-0T PED SIGNAL HEAD AND INSTALL A POLARA NAVIGATOR PEDESTRIAN PUSH BUTTON SYSTEM (OR APPROVED EQUIVALENT) INCLUDING REQUIRED CABINET EQUIPMENT ON EXISTING POLE (SEE NOTE 14)

GENERAL NOTES:

1. PERMANENT STRIPING SHALL BE PER "UNIFORM STANDARD DRAWINGS CLARK COUNTY AREA" (LATEST EDITION) OR OR "NDOT STANDARD PLANS FOR ROAD AND BRIDGES CONSTRUCTION" (LATEST EDITION), AS NOTED
2. STRIPING DIMENSIONS ARE TO CONTROL LINE, EDGE OF PAVEMENT, LIP OF GUTTER OR FACE, MEDIAN, AND BARRIER RAIL/GUARD RAIL.
3. CROSSWALK MARKING SHALL BE ALIGN WITH RAMPS AND ISLAND CUT-TROUGHS.
4. EXISTING SIGNS NOT SHOWN SHALL REMAIN IN PLACE.
5. LOCATIONS OF NEW SIGNS SHALL BE ADJUSTED IN THE FIELD TO AVOID SIGHT OBSTRUCTION WITH EXISTING LANDSCAPING WITH APPROVAL OF THE ENGINEER.
6. EXISTING STRIPING IN CONFLICT WITH PROPOSED STRIPING SHALL BE REMOVED BY APPROVED METHODS, AND REPAIR PAVEMENT AS NECESSARY (NO DIRECT PAYMENT)
7. AT ANY TIME DURING THE REMOVAL PROCESS OF ANY EXISTING STRIPING/MARKINGS, THE CONTRACTOR SHALL REPAIR ANY PAVEMENT DAMAGE AT NO COST TO CLARK COUNTY.
8. SIDEWALK RAMPS SHALL BE EXTEND TO FACE OF CURBING SHOWN AND SHALL BE CONSTRUCTED AND COORDINATED WITH SIGNAL INSTALLATION TO PROVIDE 10 INCHES REACH TO PED PUSH BUTTON.
9. CONDUIT ROUTING IS SCHEMATIC FOR PLAN CLARITY AND MAY DIFFER FROM ACTUAL INSTALLATION.
10. NEW AND RELOCATED EXISTING SIGNAL HEAD PLACEMENT SHALL BE CENTERED OVER RECEIVING LANES AS DIRECTED BY THE ENGINEER UNLESS OTHERWISE NOTED ON PLANS. M-4 HEADS SHALL BE LOCATED APPROXIMATELY 5 TO 6 FEET FROM NEAR EDGE OF THRU LANE ON THE DEPARTING LEG AS DIRECTED BY THE ENGINEER.
11. ALL NEW TENONS SHALL BE HOT-STICK GALVANIZED OR SHALL MATCH EXISTING POLE FINISH AS DIRECTED BY THE ENGINEER.
12. ABANDONED TENON FROM SIGNAL HEAD RELOCATION ARE TO BE WELDED/PLUGGED FLUSH WITH MAST ARM AND POLE AND SHALL BE TOUCHED UP WITH HOT-STICK GALVANIZED OR FINISHED TO MATCH EXISTING POLE AS AND INCIDENTAL ITEM TO SIGNAL HEAD RELOCATION AND ASSEMBLY INSTALLATION AS DIRECTED BY THE ENGINEER.
13. ALL NEW AND EXISTING SIGNAL HEADS SHALL HAVE RETROREFLECTIVE SHEETING BORDERS PER SPECIAL PROVISIONS SECTION 623 T.02.08
14. PEDESTRIAN PUSH BUTTON SYSTEMS SHALL BE PER SPECIAL PROVISIONS SECTION 623 T.02.11.
15. EXISTING IMPROVEMENTS SHALL BE PROTECTED IN PLACE AND RESTORED TO EQUAL OR BETTER CONDITIONS IF DISTURBED.

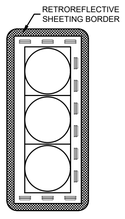

NOTES:

1. ALL TRAFFIC SIGNAL BACKPLATES SHALL HAVE A 2-INCH RETROREFLECTIVE ADHESIVE SHEETING BORDER ON THE ENTIRE OUTER PERIMETER OF THE FRONT SIDE OF THE BACKPLATE.
2. RETROREFLECTIVE SHEETING SHALL BE FLUORESCENT YELLOW, ASTM TYPE IV OR BETTER.
3. THE RETROREFLECTIVE SHEETING BORDER SHALL HAVE A MINIMUM OF ½ INCH CLEARANCE FROM ALL LOUVERS. NO RETROREFLECTIVE SHEETING SHALL BE PLACED OVER ANY LOUVERED AREA.
4. RETROREFLECTIVE SHEETING BORDER SHALL BE INSTALLED BY THE MANUFACTURER, AND MODIFICATIONS SHALL NOT BE MADE BY THE CONTRACTOR.
5. THE BACKPLATE WITH RETROREFLECTIVE SHEETING BORDER SHALL BE FROM THE SAME MANUFACTURER AS THE SIGNAL HEAD ASSEMBLY. THE COMPLETE SIGNAL HEAD ASSEMBLY, INCLUDING THE BACKPLATE, SHALL BE CAPABLE OF WITHSTANDING WINDS OF 90 MPH WITHOUT DAMAGE OR SEPARATION OF ANY PARTS FROM THE SIGNAL HEAD ASSEMBLY.
6. PICTURE SHOWN IS AN EXAMPLE OF A THREE SECTION HEAD. OVERALL LENGTH OF THE BACKPLATE AND NUMBER OF LOUVERS WILL VARY FOR OTHER SIGNAL HEAD ASSEMBLIES.

BACKPLATE WITH RETROREFLECTIVE SHEETING BORDER — 1 / -

NTS

CONDUIT AND WIRE SCHEDULE

WIRE & CONDUCTOR	FROM	TO	VIA CONDUIT 1	VIA CONDUIT 2	VIA CONDUIT 3
(4) LEAD-IN CABLES	EXPB07	PB05 (H1)	N		
(1) LEAD-IN CABLES	EXPB07	PB05 (H2)	N	N	
(1) LEAD-IN CABLES	EXPB07	PB05 (H3)	N	N	N
(QUANTITY) & CONDUIT SIZE E - INDICATES EXISTING N - INDICATES NEW R - INDICATES EXISTING WIRES TO BE REPLACE			E (1) 3" E (1) 2"	N (1) 3"	N (1) 3"
A No. 8 GREEN GROUND WIRE (THW-2 OR XHHW2) SHALL BE RUN FROM THE CONTROLLER CABINET TO EACH SIGNAL POLE BASE.					
PULL STRING SHOULD BE INSTALL FOR EVERY PULLBOX RUN FOR FUTURE USE					

Call before you Dig
AVOID CUTTING UNDERGROUND UTILITY LINES. IT'S COSTLY.
Call 811 OR 1-800-227-2600

FAST
Call before you UnderGround
1-702-432-5300
FREEWAY AND ARTERIAL SYSTEM OF TRANSPORTATION

AVOID HITTING OVERHEAD POWER LINES. IT'S COSTLY.
CALL BEFORE YOU DO OVERHEAD
1-702-227-2929

HCC TF.DWG

REV No	DATE	DESCRIPTION	APPROVED

CLARK COUNTY NEVADA

HARMON AVENUE IMPROVEMENTS

TRAFFIC SIGNAL
HARMON AVE AND CITY CENTER
CLARK COUNTY, NEVADA, DEPARTMENT OF PUBLIC WORKS

PROFESSIONAL ENGINEER - STATE OF NEVADA
KAIZAD F. AZDAM
Exp. 06-30-2022
CIVIL
No 15520
9/27/2021

DESIGNED BY: HF
DRAWN BY: HF
CHECKED BY: JB/KY
DATE: October 6, 2021

SCALE
HORIZ: 1" = 20'
VERT: NONE
FIELD BOOK NONE
WORK ORDER NONE
PROJECT No. NONE

SHEET No
T-1
4 OF 4
L-2302

HARMON AVENUE IMPROVEMENTS - SIDEWALK INSTALLATION LV BLVD TO CITY CENTER

100% DESIGN - NOT FOR CONSTRUCTION

P:\TRAFFIC DIVISION\DESIGN\3 PROJECTS\PM & SW HARMON AND CITY CENTER\DESIGN AND SPECS\CADD WORKING FOLDER\PRODUCTION\HCC TF.DWG - BERT

LAS VEGAS VALLEY WATER DISTRICT

CONTRACT NO. C1497

LAS VEGAS BOULEVARD WATERLINE REPLACEMENT FROM TROPICANA AVE TO FLAMINGO RD

LAS VEGAS BOULEVARD WATERLINE IMPROVEMENTS

LIST OF DRAWINGS

SHEET NO	DRAWING NO	DESCRIPTION
1	WG-1	COVER SHEET
2	WG-2	LVVWD GENERAL NOTES AND LEGEND
3	WG-3	GENERAL NOTES
4	WG-4	GENERAL NOTES
5	WG-5	ABBREVIATION LIST
6	W-1	36" WATER MAIN – PLAN AND PROFILE STA 145+50 TO STA 152+50
7	W-2	36" WATER MAIN – PLAN AND PROFILE STA 152+50 TO STA 161+50
8	W-3	36" WATER MAIN – PLAN AND PROFILE STA 161+50 TO STA 169+50
9	W-4	36" WATER MAIN – PLAN AND PROFILE STA 169+50 TO STA 177+50
10	W-5	36" & 24" WATER MAIN – PLAN AND PROFILE STA 177+50 TO STA 185+50
11	W-6	24" WATER MAIN – PLAN AND PROFILE STA 185+50 TO STA 193+50
12	W-7	24" WATER MAIN – PLAN AND PROFILE STA 193+50 TO STA 200+50
13	W-8	12" & 24" WATER MAIN – PLAN AND PROFILE STA 145+50 TO STA 152+50
14	W-9	24" & 12" WATER MAIN – PLAN AND PROFILE STA 152+50 TO STA 161+50
15	W-10	12" WATER MAIN – PLAN AND PROFILE STA 161+50 TO STA 169+50
16	W-11	12" WATER MAIN – PLAN AND PROFILE STA 169+50 TO STA 178+50
17	W-12	WATER ABANDONMENT PLAN STA 146+50 TO STA 173+50
18	W-13	WATER ABANDONMENT PLAN STA 173+50 TO STA 200+50
19	W-14	36" WATER MAIN – LATERAL PLAN AND PROFILE STA 147+41 & STA 165+89
20	W-15	24" WATER MAIN – LATERAL PLAN AND PROFILE STA 151+41 & STA 157+30
21	W-16	24" & 12" WATER MAIN – LATERAL PLAN AND PROFILE STA 153+65
22	W-17	12" WATER MAIN – LATERAL PLAN AND PROFILE STA 153+78 & STA 161+53
23	W-18	24" WATER MAIN – LATERAL PLAN AND PROFILE STA 181+50 & STA 183+17
24	W-19	24" WATER MAIN – LATERAL PLAN AND PROFILE STA 183+94 & STA 186+61
25	W-20	24" WATER MAIN – LATERAL PLAN AND PROFILE STA 189+05 & STA 192+10
26	W-21	24" WATER MAIN – LATERAL PLAN AND PROFILE STA 192+69 & STA 194+12
27	W-22	24" WATER MAIN – LATERAL PLAN AND PROFILE STA 197+03 & STA 199+00
28	W-23	24" WATER MAIN – LATERAL PLAN AND PROFILE STA 188+47 & STA 199+43
29	W-24	24" WATER MAIN – LATERAL PLAN AND PROFILE STA 151+31 & STA 151+42
30	W-25	24" WATER MAIN – LATERAL PLAN AND PROFILE STA 157+30 & STA 156+99
31	W-26	36" WATER MAIN – LATERAL PLAN AND PROFILE STA STA 159+16
32	W-27	12" WATER MAIN – LATERAL PLAN AND PROFILE STA 161+75 & STA 161+74
33	W-28	12" WATER MAIN – LATERAL PLAN AND PROFILE STA 162+08 & STA 161+61 & STA 162+54
34	W-29	12" WATER MAIN – LATERAL PLAN AND PROFILE STA 166+64 & STA 167+84
35	W-30	12" WATER MAIN – LATERAL PLAN AND PROFILE STA 167+94 & STA 168+82
36	W-31	12" & 24" WATER MAIN – LATERAL PLAN AND PROFILE STA 169+08 & STA 197+38
37	W-32	12" WATER MAIN – LATERAL PLAN AND PROFILE STA 169+71 & STA 170+29
38	W-33	12" WATER MAIN – LATERAL PLAN AND PROFILE STA 171+52 & STA 171+62
39	W-34	12" WATER MAIN – LATERAL PLAN AND PROFILE STA 173+83 & STA 174+31
40	W-35	12" WATER MAIN – LATERAL PLAN AND PROFILE STA 175+04 & STA 176+15
41	W-36	12" WATER MAIN – LATERAL PLAN AND PROFILE STA 176+48 & STA 176+75
42	W-37	12" & 36" WATER MAIN – LATERAL PLAN AND PROFILE STA 177+22 & STA 178+66
43	W-38	36" VALVE VAULT – PLAN AND PROFILE STA 159+49
44	W-39	36" WATER MAIN – AIR VALVE ASSEMBLY PLAN AND PROFILE STA 161+13 & STA 165+82
45	W-40	36" WATER MAIN – BLOW-OFF ASSEMBLY PLAN AND PROFILE STA 151+38 & STA 160+85
46	W-41	36" & 24" WATER MAIN – BLOW OFF & AIR VALVE ASSEMBLY PLAN AND PROFILE STA 165+65 & STA 157+30
47	W-42	24" WATER MAIN – AIR VALVE ASSEMBLY PLAN AND PROFILE STA 157+54 & STA 184+73
48	W-43	24" WATER MAIN – AIR VALVE ASSEMBLY PLAN AND PROFILE STA 184+93 & 188+77
49	W-44	24" WATER MAIN – AIR VALVE ASSEMBLY PLAN AND PROFILE STA 194+28 & STA 194+48
50	W-45	24" WATER MAIN – BLOW-OFF ASSEMBLY PLAN AND PROFILE STA 153+44
51	W-46	24" WATER MAIN – BLOW-OFF ASSEMBLY PLAN AND PROFILE STA 183+47 & STA 188+53
52	W-47	24" WATER MAIN – BLOW-OFF ASSEMBLY PLAN AND PROFILE STA 191+35 & STA 199+50
53	W-48	12" WATER MAIN – AIR VALVE ASSEMBLY PLAN AND PROFILE STA 151+07 & STA 162+52
54	W-49	12" WATER MAIN – AIR RELEASE ASSEMBLY PLAN AND PROFILE STA 165+84
55	W-50	30" WATER MAIN CONNECTION AND LINE STOP – TROPICANA– STA 153+38 & STA 152+99
56	W-51	36" WATER MAIN CONNECTION AND LINE STOP – HARMON – STA 181+58 & STA 180+14
57 THRU 69	WD-1 THRU WD-13	CIVIL DETAILS – MAIN
70 THRU 75	WD-14 THRU WD-19	CIVIL DETAILS – LATERAL
76 THRU 80	WD-20 THRU WD-25	CIVIL DETAILS – CATHODIC PROTECTION

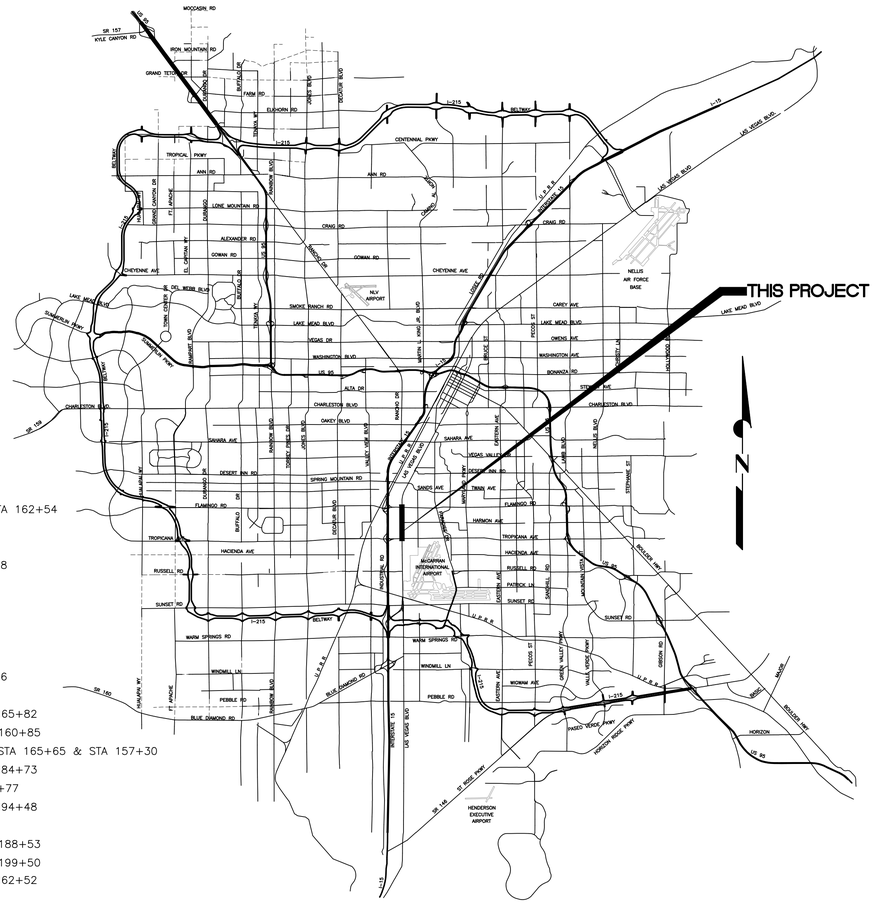

LOCATION MAP

NOT TO SCALE

CAUTION TO CONTRACTOR:

THE CONTRACTOR SHALL BE RESPONSIBLE TO INVESTIGATE AND VERIFY THE ACTUAL LOCATION AND DEPTH OF ALL EXISTING UNDERGROUND FACILITIES AT LEAST 48 HOURS IN ADVANCE OF THE PERFORMANCE OF ANY WORK.

AGENCY	PLANS REVIEWED BY	DATE
CENTRAL TELEPHONE COMPANY d/b/a CENTURYLINK		
CLARK COUNTY WATER RECLAMATION DISTRICT		
COX COMMUNICATION, LAS VEGAS, INC		
LAS VEGAS VALLEY WATER DISTRICT		
NV ENERGY COMPANY (TRANSMISSION)		
NV ENERGY COMPANY (DISTRIBUTION)		
SOUTHWEST GAS CORPORATION		
DEPARTMENT OF PUBLIC WORKS	BY	DATE
BUILDING FIRE PREVENTION		

NO.	REVISIONS	DATE
		APPROVED

CLARK COUNTY NEVADA

LAS VEGAS BLVD WATERLINE REPLACEMENT - TROPICANA AVE TO FLAMINGO RD (PHASE E/F)

COVER SHEET

CLARK COUNTY, NEVADA, DEPARTMENT OF PUBLIC WORKS

PROFESSIONAL ENGINEER - STATE OF NEVADA
RAY P. MONTOYA
Exp. 12/31/2021
CIVIL
No. 025877
10/08/2021

PROJECT No: 500-897-LV-EF
DRAWN BY: GAG/KAS/KMT
DESIGNED BY: ROM/GAG
CHECKED BY: ALF/RPM/ROM
APPROVED BY

Kimley»Horn
6671 Las Vegas Boulevard South, Suite 320
Las Vegas, Nevada 89119
Tel. No.(702) 862-3600

SCALE
HORIZ: N/A
VERT: N/A
FIELD BOOK

DRAWING NO.
WG-1
SHT. 1 OF 80
L-2304

User: Gerardo.Gonzalez
Path:A:\,\\LC-_Water\Resources\2083.0000_Lasvegasblvd\CADD\LVB Phase E Water Plans\1_01_CV.dwg
Copyright reserved. Use for purposes of review, is intended only for the specific purpose and client for which it was prepared. Reuse of and improper reliance on this document without written authorization and adaptation by Kimley-Horn and Associates, Inc. shall be without liability to Kimley-Horn and Associates, Inc.

LEGEND

DESCRIPTION	SYMBOL	
	PROPOSED	EXISTING
WATER PIPELINE (16" AND SMALLER)	12" PVC	12" PVC
WATER PIPELINE (LARGER THAN 16")	36" MLCP ACCESS MH	36" MLCP
IN-LINE VALVE VAULT		
ACCESS MANHOLE (TO PIPELINE)		
BLOWOFF		
COMBINATION AIR VALVE	A	
TEST STATION (CATHODIC)	T	
REDUCER		
END CAP FOR WATER PIPELINE		
WATER VALVE		
FIRE HYDRANT ASSEMBLY		
WATER METER	WM	WM
WATER METER SIZE	1"	
IDENTIFICATION HEXAGON	XX	
EDGE OF PAVEMENT		
SANITARY SEWER MANHOLE		S
STORM DRAIN MANHOLE		SD
POWER POLE W/GUY WIRE		
STREET LIGHT (GENERIC SYMBOL NOT RELATED TO WATTAGE)		
SURVEY MONUMENT		
POLYGON FOR TRANSMISSION POLE		
ELECTRICAL BOX		ELEC
ELECTRICAL PANEL BOX		ELEC PANEL
CABLE TV		CTV CTV
FENCE		X X X X X
GAS LINE		2" G
CONTOURS		2640
DITCH		
SANITARY SEWER		10" SS
STORM DRAIN		24" SD
UNDERGROUND POWER		UGP
UNDERGROUND TELEPHONE		UGTEL
CURB, GUTTER AND SIDEWALK		
PROPERTY LINE		PL PL
CENTER LINE	℄	℄ ℄
BLOCK WALL		
RIGHT-OF-WAY LINE		
PATENT RESERVATION OR EASEMENT LINE		
SECTION LINE		
ANGLE (HORIZONTAL OR VERTICAL)	∠	
ANGLE OF CURVE	△	
FIELD WELD		
REFERENCE BUBBLE	1 D2 — DETAIL OR SECTION REFERENCE NUMBER (DETAIL) OR LETTER (SECTION); DRAWING NUMBER OF SHEET WHERE DETAIL OR SECTION RESIDES	C1, C9, C11 — ALL SHEETS THAT REFERENCE TO THE DETAIL OR SECTION

DESCRIPTION	SYMBOL	
	PROPOSED	EXISTING
SHALLOW MOUNT BOLLARD		
TRENCH MOUNT BOLLARD		
DRILLED FOOTING BOLLARD		
T-BOLLARD		
FULL PAVEMENT RESTORATION, SEE DETAIL 1 ON DWG NO WD-1		

LAS VEGAS VALLEY WATER DISTRICT NOTES

1. THE CONTRACTOR SHALL PROVIDE ALL NECESSARY HORIZONTAL AND VERTICAL TRANSITIONS BETWEEN NEW CONSTRUCTION AND EXISTING SURFACES FOR PROPER DRAINAGE, AND FOR INGRESS AND EGRESS TO SAID CONSTRUCTION. EXTENT OF TRANSITIONS TO BE DETERMINED IN THE FIELD BY THE LVVWD ENGINEER.
2. REPLACE EXISTING SEWER LINES OR STORM DRAINS WHICH CROSS OVER NEW WATER LINE WITH C900 WATER QUALITY PIPE TEN (10) FEET BEYOND EACH SIDE OF WATER LINE OR SLURRY ENCASE OR WELD JOINTS (MLCP) OF NEW WATER LINE TEN (10) FEET BEYOND EACH SIDE OF ALL SEWER MAINS AND LATERALS OR STORM DRAINS.
3. SOME WATER SERVICE LATERALS ARE NOT SHOWN. ALL WATER SERVICE LATERALS SHALL BE PROTECTED IN PLACE OR REPLACED WITH COPPER TUBING AT THE CONTRACTOR'S EXPENSE IN ACCORDANCE WITH THE UDS.
4. DURING ALL PHASES OF CONSTRUCTION THE CONTRACTOR SHALL MAINTAIN A 10 FOOT MINIMUM CLEARANCE IN ALL DIRECTIONS OF ALL OVERHEAD POWER LINES AND EQUIPMENT.
5. REMOVAL OR RELOCATION OF POWER POLES, TELEPHONE POLES, CABLE POLES OR JOINTLY-OWNED POLES AND APPURTENANCES WHICH INTERFERE WITH THE IMPROVEMENTS REQUIRED TO BE CONSTRUCTED UNDER THIS CONTRACT, SHALL BE COORDINATED BY THE CONTRACTOR WITH THE RESPECTIVE UTILITY COMPANY.
6. ALL AGENCY/UTILITY INSPECTORS SHALL BE CALLED WHENEVER WORK IS TO BE PERFORMED NEAR OR ON ANY OF THEIR FACILITIES.
7. SEWER LATERALS ARE NOT SHOWN. THE CONTRACTOR SHALL MAINTAIN CONTINUOUS SEWER SERVICE TO CUSTOMERS. SEWER LATERALS CUT DURING CONSTRUCTION SHALL BE REPAIRED BY THE CONTRACTOR AT HIS EXPENSE PER DESIGN AND CONSTRUCTION STANDARDS OF AGENCY HAVING JURISDICTION.
8. SANITARY SEWER MANHOLES SHALL BE PROTECTED FROM DAMAGE WHEN EXCAVATING IN THEIR VICINITY.

LAS VEGAS VALLEY WATER DISTRICT (LVVWD) STANDARD NOTES LVVWD PROJECT # C1497

1. NO WORK SHALL BEGIN UNTIL THE WATER PLANS HAVE BEEN APPROVED FOR CONSTRUCTION BY THE LVVWD. FOLLOWING WATER PLAN APPROVAL, NOTICE SHALL BE GIVEN TO THE LVVWD COMMUNICATION SUPPORT CENTER (258-7171) TWO (2) WORKING DAYS PRIOR TO THE START OF CONSTRUCTION. FOR FUTURE INSPECTIONS, NOTICE MUST BE GIVEN BY 2:00 P.M. THE BUSINESS DAY PRIOR TO THE REQUESTED LVVWD INSPECTION. WHEN REQUESTING INSPECTIONS, PLEASE REFER TO THE PROJECT # IDENTIFIED ABOVE.
2. ALL WORK SHALL CONFORM TO LVVWD STANDARD PLATES, DRAWINGS, AND SPECIFICATIONS, AND TO THE 2010 EDITION OF THE UNIFORM DESIGN AND CONSTRUCTION STANDARDS FOR POTABLE WATER SYSTEMS (UDACS). THE LATEST EDITION OF UDACS SHALL SUPERSEDE ANY CONFLICTS CONTAINED IN THE APPROVED DRAWINGS AND/OR SPECIFICATIONS.
3. ALL WORK, EXCEPT AS MODIFIED BY THESE PLANS OR BY NOTE 2 ABOVE, SHALL BE DONE IN ACCORDANCE WITH THE MOST RECENT DRAFT OR EDITION OF THE UNIFORM STANDARD SPECIFICATIONS FOR PUBLIC WORKS CONSTRUCTION OFFSITE IMPROVEMENT, CLARK COUNTY AREA.
4. A SINGLE PIPE MATERIAL SHALL BE USED THROUGHOUT THE PROJECT UNLESS OTHERWISE APPROVED BY THE LVVWD.
5. ALL SERVICE LATERALS TWO (2) INCHES IN DIAMETER AND SMALLER SHALL BE TYPE K COPPER TUBING WITH LVVWD APPROVED SERVICE SADDLES.
6. ALL WATER METER BOXES SHALL BE LOCATED OUTSIDE OF DRIVEWAY AREAS.
7. ALL VALVES SHALL BE LOCATED OUTSIDE OF DRIVEWAYS, VALLEY AND CURB GUTTERS.
8. ALL WATER AND STORM DRAIN OR SANITARY SEWER CROSSINGS SHALL CONFORM TO SECTION 2.22 OF THE 2010 EDITION OF THE UDACS.
9. ALL WATER FACILITIES SHALL BE FILLED, DISINFECTED, PRESSURE TESTED, FLUSHED, FILLED, AND AN ACCEPTABLE WATER SAMPLE OBTAINED, PRIOR TO CONNECTION TO THE LVVWD DISTRIBUTION SYSTEM.
10. THE CONTRACTOR MUST OBTAIN ALL METERS TWO (2) INCHES AND SMALLER FROM LVVWD CENTRAL STORES. TELEPHONE 258-3152 OR 258-3802, TWO (2) WORKING DAYS PRIOR TO METER PICKUP.
11. ANY INTERRUPTION OF SERVICE MUST BE PERFORMED IN ACCORDANCE WITH UDACS SECTION 3.14.01, AND APPROVED BY THE LVVWD INSPECTION DIVISION PRIOR TO SHUTDOWN. PROPER WRITTEN NOTIFICATION MUST BE GIVEN TO ALL AFFECTED CUSTOMERS.
12. ALL WATER FACILITY CONSTRUCTION MATERIALS USED MUST BE AS LISTED ON THE LVVWD PRE-APPROVED MATERIALS AND MANUFACTURER'S LISTING FOR NEW FACILITIES, LATEST REVISION, OR SPECIFICALLY APPROVED ON THESE PLANS.
13. TELEPHONE "CALL BEFORE YOU DIG" AT "811" OR 1-800-227-2600.

ENGINEER'S STATEMENT

EXISTING ABOVE AND BELOW GROUND UTILITIES HAVE BEEN DELINEATED ON THESE PLANS BASED UPON FIELD SURVEY INFORMATION AS WELL AS FROM BLUE STAKE MARKINGS AND UTILITY BASE MAPS (AS MADE AVAILABLE) AND THEREFORE THE ENGINEER MAKES NO GUARANTEE OF THE ACCURACY OR COMPLETENESS OF THE UTILITY LOCATIONS OR OF THE EXISTENCE OR NONEXISTENCE OF ANY UTILITY OR UNDERGROUND STRUCTURES SHOWN. THE CONTRACTOR IS REQUIRED TO TAKE ALL PRECAUTIONARY MEANS NECESSARY TO PROTECT ANY UTILITY. THE CONTRACTOR SHALL VERIFY LOCATIONS AND ELEVATIONS OF ALL UTILITIES PRIOR TO ANY CONSTRUCTION. CONTRACTOR SHALL ALSO BE RESPONSIBLE FOR DAMAGE TO EXISTING ABOVE OR UNDERGROUND UTILITIES, INCLUDING THOSE NOT SHOWN ON THESE PLANS.

811 know what's below Call before you dig

SAFETY ALERT Call Before You Overhead 1-702-227-2929

UNION PACIFIC RAILROAD Call Before You Dig 1-800-336-9193

Call before you UnderGround 1-702-432-5300

LVVWD APPROVAL

APPROVED FOR CONSTRUCTION

LAS VEGAS VALLEY WATER DISTRICT PLANNING AND ENGINEERING SERVICES

PROJECT No. 139055 FIRST APPROVED DATE

NO.	REVISIONS	DATE
		APPROVED

CLARK COUNTY NEVADA

LAS VEGAS BLVD WATERLINE REPLACEMENT - TROPICANA AVE TO FLAMINGO RD (PHASE E/F)

LVVWD GENERAL NOTES AND LEGEND

CLARK COUNTY, NEVADA, DEPARTMENT OF PUBLIC WORKS

PROFESSIONAL ENGINEER - STATE OF NEVADA
RAY P. MONTOYA
Exp. 12/31/2021
CIVIL
No.025877
10/08/2021

PROJECT No: 500-897-LV-EF DRAWN BY: GAG/KAS/KMT
DESIGNED BY: ROM/GAG CHECKED BY: ALF/RPM/ROM
APPROVED BY

Kimley»Horn
6671 Las Vegas Boulevard South, Suite 320
Las Vegas, Nevada 89119
Tel. No.(702) 862-3600

SCALE
HORIZ: N/A
VERT: N/A
FIELD BOOK

DRAWING NO.
WG-2
SHT. 2 OF 80
L-2304

LAS VEGAS BOULEVARD WATERLINE IMPROVEMENTS

User: Kyle.Timm
Path: K:\Civil_Water\Resources\098313000_Lasvegasblvd\CADD\LVB Phase E Water Plans\2_C2.dwg
Copyright © 2021 Kimley-Horn and Associates, Inc. This document, together with the concepts and designs presented herein, as an instrument of service, is intended only for the specific purpose and client for which it was prepared. Reuse of and improper reliance on this document without written authorization and adaptation by Kimley-Horn and Associates, Inc. shall be without liability to Kimley-Horn and Associates, Inc.

LAS VEGAS VALLEY WATER DISTRICT (LVVWD)
STANDARD NOTES LVVWD PROJECT # C1497 CONTINUED

14. THE INSTALLATION OF LAS VEGAS VALLEY WATER DISTRICT (LVVWD) MUNICIPAL WATER FACILITIES WITHIN ALL STREETS IS ASSUMED TO BE IN COMPLIANCE WITH THE UNIFORM STANDARDS, INCLUDING THE PLACEMENT OF ASPHALT PAVING STREET SURFACES. ANY REPAIR WORK DONE BY THE LVVWD TO THE MUNICIPAL WATER FACILITIES WILL INCLUDE THE PLACEMENT OF AN APPROPRIATELY SIZED ASPHALT REPAIR PATCH ON THE STREET SURFACE.

    ANY DECORATIVE PAVING SURFACE WITHIN THE STREET IS THE RESPONSIBILITY OF THE OWNER'S ASSOCIATION, OR THE INDIVIDUAL PROPERTY OWNERS IF NO OWNER'S ASSOCIATION IS IN EXISTENCE, OR THE AGENCY HAVING JURISDICTION. DECORATIVE SURFACE MATERIALS PLACED WITHIN THE TEN FOOT EASEMENT ABUTTING A PUBLIC OR PRIVATE STREET, IF DISTURBED BY THE LVVWD DURING THE REPAIR OR OPERATION OF ITS FACILITIES, WILL BE REPLACED BY LVVWD WITH AN APPROPRIATELY SIZED PLAIN FINISH CONCRETE PATCH. THE LVVWD WILL NOT RESTORE, AND WILL NOT BE RESPONSIBLE FOR THE RESTORATION OF, ANY DECORATIVE PAVING SURFACE WITHIN THE STREET. THE LVVWD WILL NOT ATTEMPT TO MATCH COLOR OR FINISH OF ANY ADJACENT MATERIALS.

LAS VEGAS VALLEY WATER DISTRICT (LVVWD)
SYSTEM ABANDONMENT NOTES

1. EXISTING PIPELINE, SERVICE LATERAL, VALVE, FIRE HYDRANT ABANDONMENT AND CUT AND CAPS ARE TO BE COMPLETED PER REQUIREMENTS WITH SECTION 2 AND 3 OF THE UNIFORM DESIGN AND CONSTRUCTION STANDARDS (UDACS).

2. ALL PIPELINES TO BE ABANDONED SHALL BE CUT AND SECURELY CAPPED (ALL ENDS). THE CUT AND CAP LOCATION ON THE MAIN TO BE ABANDONED SHALL BE A MAXIMUM OF ONE (1) FOOT FROM THE VALVE OR POINT OF TERMINATION. ANY ABANDONED PIPELINE LARGER THAN TEN (10) INCHES MUST BE FILLED WITH CLSM I MATERIAL.

3. <u>ABANDONMENT OF EXISTING SERVICE LATERAL (TWO (2) INCH AND SMALLER)</u>

    THE CONTRACTOR SHALL NOTIFY THE AGENCY TWO (2) FULL BUSINESS DAYS PRIOR TO THE REQUESTED REMOVAL TIME TO ALLOW THE AGENCY TO TAKE THE FINAL METER READING. THE CONTRACTOR MAY THEN BEGIN REMOVAL PROCEDURES FOR THE AFFECTED SERVICE AS FOLLOWS:

    EXISTING SERVICE LATERALS TO BE ABANDONED FROM EXISTING WATER MAINS SHALL HAVE THE CORPORATION STOPS TURNED OFF AT THE MAIN, A MINIMUM OF TWELVE (12) INCHES OF THE LATERAL CUT OUT NEAR THE CORPORATION STOPS AND A BRASS CAP INSTALLED ON THE CORPORATION STOP. IF THE CORPORATION STOP IS DAMAGED BEYOND REPAIR OR PULLED FROM THE EXISTING WATER MAIN, THE MAIN SHALL BE REPAIRED AT THE CONTRACTOR'S EXPENSE IN A MANNER APPROVED BY THE AGENCY. IF IT IS DISCOVERED THE CORPORATION STOP IS NOT WATER TIGHT, THROUGH NO FAULT OF THE CONTRACTOR, THE CONTRACTOR SHALL NOTIFY THE AGENCY FOR FURTHER DIRECTION. THE EXISTING METER(S) SHALL BE REMOVED AND DELIVERED TO THE AGENCY.

4. <u>ABANDONMENT OF EXISTING SERVICE LATERAL (THREE (3) INCH AND LARGER)</u>

    THE CONTRACTOR SHALL NOTIFY THE AGENCY TWO (2) FULL BUSINESS DAYS <u>PRIOR</u> TO THE REQUESTED REMOVAL TIME TO ALLOW THE AGENCY TO TAKE THE FINAL METER READING AND TO NOTIFY THE AGENCY'S INSPECTOR OF THE IMPENDING WORK. THE CONTRACTOR MAY THEN BEGIN REMOVAL PROCEDURES FOR THE AFFECTED SERVICE AS FOLLOWS:

    ALL VALVES TO BE ABANDONED SHALL BE ABANDONED IN THE CLOSED POSITION, UNLESS SHOWN OTHERWISE, BY REMOVING A MINIMUM OF THE TOP TWENTY-FOUR (24) INCHES OF THE VALVE BOX AND THEN FILLING THE BOTTOM OF THE BOX WITH A MINIMUM OF EIGHT (8) INCHES OF SAND OR TYPE II AGGREGATE BASE, THE REMAINING PORTION OF THE VALVE BOX SHALL BE FILLED WITH CONCRETE HAVING A COMPRESSIVE STRENGTH OF AT LEAST TWO-THOUSAND (2,000) PSI.

    IF THE VALVE IS TO BE ABANDONED IN THE CLOSED POSITION, THE LATERAL MUST BE CUT WITHIN ONE (1) FOOT OF THE ABANDONED VALVE, OR AS SHOWN ON PLANS, AND CAPPED. WHERE A JOINT OR COUPLING IN THE EXISTING PIPE IS UNCOVERED AT THE CUT AND CAP LOCATIONS, THE INSTALLATION OF A PLUG MAY BE PERMITTED WITH AGENCY APPROVAL. THE CONTRACTOR SHALL INSTALL A CONCRETE THRUST BLOCK IN ACCORDANCE WITH THE PROVISIONS OF THE UDACS PLATE 31 AT ALL CAP OR PLUG LOCATIONS.

    THE EXISTING METER(S) SHALL BE REMOVED AND DELIVERED TO THE AGENCY. THE CONTRACTOR SHALL THEN REMOVE THE VAULT OR A MINIMUM OF THE VAULT ROOF AND THE TOP TWENTY-FOUR (24) INCHES OF THE VAULT WALLS, AND BACKFILL THE ABANDONED VAULT WITH TYPE II MATERIAL COMPACTED TO NINETY (90)% OF MAXIMUM DRY DENSITY OR CLSM I, AS APPROVED BY THE AGENCY.

5. WHERE SHOWN ON THE DRAWING(S), THE CONTRACTOR SHALL ABANDON THE EXISTING FIRE HYDRANT(S) BY REMOVING BOTH THE UPPER AND LOWER BARRELS OF THE FIRE HYDRANT SO THAT NO PORTION OF THE REMAINING FIRE HYDRANT ASSEMBLY IS CLOSER THAN TWO (2) FEET TO THE EXISTING GRADE. A NEW HYDRANT SHALL BE INSTALLED AT THE NEW LOCATION AS INDICATED ON THE DRAWING, IN ACCORDANCE WITH UDACS PLATE 40 AND 41. THE EXISTING VALVE SHALL BE ABANDONED IN A CLOSED POSITION, UNLESS SHOWN OTHERWISE, BY REMOVING A MINIMUM OF THE TOP TWENTY-FOUR (24) INCHES OF THE VALVE BOX, AND THEN FILLING THE BOTTOM OF THE BOX WITH A MINIMUM OF EIGHT (8) INCHES OF SAND OR TYPE II AGGREGATE BASE. THE REMAINING PORTION OF THE VALVE BOX SHALL BE FILLED WITH CONCRETE HAVING A COMPRESSIVE STRENGTH OF AT LEAST TWO-THOUSAND (2,000) PSI. THE LATERAL SHALL BE CUT WITHIN ONE (1) FOOT OF THE ABANDONED VALVE, OR AS SHOWN ON PLANS, AND CAPPED. WHERE A JOINT OR COUPLING IN THE EXISTING PIPE IS UNCOVERED AT THE CUT AND PLUG CAP LOCATION, THE INSTALLATION OF A PLUG MAY BE PERMITTED, WITH AGENCY APPROVAL. A CONCRETE THRUST BLOCK SHALL BE INSTALLED AT ALL CUT AND CAP LOCATIONS IN ACCORDANCE WITH THE PROVISIONS OF UDACS PLATE 31. THE EXITING FIRE HYDRANT SHALL BE DELIVERED TO THE AGENCY.

6. EXISTING FIRE HYDRANT TO REMAIN IN SERVICE SHALL BE REPLACED WITH A NEW FIRE HYDRANT IN ACCORDANCE TO UDACS PLATES 40 AND 41. EXISTING FIRE HYDRANT ASSEMBLIES SHALL BE DELIVERED TO THE AGENCY.

7. ABANDONED WATER MAIN CAP INSTALLATIONS MAY NOT BE REQUIRED WHEN CONCRETE THRUST BLOCKS FOR PROPOSED PIPELINE CLOSE/PLUG OPEN ENDS OF THE ABANDONED WATER LINE.

GENERAL NOTES

1. THE CONTRACTOR SHALL BE RESPONSIBLE TO INVESTIGATE AND VERIFY THE ACTUAL LOCATION AND DEPTH OF ALL EXISTING UNDERGROUND FACILITIES AT LEAST 48 HOURS IN ADVANCE OF THE PERFORMANCE OF ANY WORK.

2. THE CONTRACTOR SHALL BE RESPONSIBLE FOR REPLACING ALL DAMAGED OR DISTURBED EXISTING LANDSCAPE AND IRRIGATION FACILITIES DURING CONSTRUCTION OPERATIONS.

3. THE CONTRACTOR SHALL BE RESPONSIBLE FOR REPLACING ALL DAMAGED OR DISTURBED CURBS, GUTTERS, SIDEWALKS AND AC PAVEMENT DURING CONSTRUCTION OPERATIONS.

4. NO LEAD COMPLIANCE NOTE: TO COMPLY WITH THE FEDERAL SAFE DRINKING WATER ACT, ALL WATER WORKS BRASS PRODUCTS PROPOSED TO BE RELOCATED, OR INSTALLED AS NEW MUST BE INSTALLED WITH THE LEAD FREE APPROVED PRODUCT. THE OLD LEADED PRODUCT MAY NOT BE REUSED.

5. DISPOSAL OF ASBESTOS CEMENT PIPE (ACP) SHALL BE IN ACCORDANCE WITH ALL LOCAL, STATE, AND FEDERAL REGULATIONS.

6. IN AREAS WHERE THE EXCAVATION OR GROUND ELEVATION IS LESS THAN THREE (3) FEET, FROM THE TOP OF THE LVVWD TRANSMISSION MAIN, NO EXCAVATION EQUIPMENT, OTHER THAN HAND HELD EQUIPMENT WILL BE ALLOWED WITHIN TEN (10) FEET OF THE PIPELINE IN THESE AREAS. THE CONTRACTOR IS TO PLACE A CONCRETE BARRIER; I.E. JERSEY RAIL, TO IDENTIFY AND PROTECT THE "NO EQUIPMENT ZONE".

7. LVVWD CANNOT GUARANTEE A WATERTIGHT SHUTDOWN WHERE CONNECTIONS OR REPAIRS TO EXISTING FACILITIES ARE REQUIRED. THE CONTRACTOR SHALL ENSURE ALL LABOR AND EQUIPMENT IS AVAILABLE TO REMOVE REMAINING WATER. COORDINATION WITH INSPECTION DIVISION MUST TAKE PLACE PRIOR TO ANY TRIAL SHUTDOWN.

8. CONTRACTOR TO INSTALL TEMPORARY SERVICE TO ENSURE PROPER SHUTDOWN IN THE EVENT NO OTHER APPURTENANCES ARE AVAILABLE.

9. COORDINATE SHUTDOWNS TO MINIMIZE SERVICE IMPACTS. MAINTAIN FIRE HYDRANT COVERAGE DURING CONSTRUCTION PER JURISDICTIONAL CODE. REFER TO THE UNIFORM DESIGN AND CONSTRUCTION STANDARDS (UDACS), SECTION 3, FOR CONNECTIONS TO EXISTING FACILITIES.

10. WATER MAIN JOINT DEFLECTION, PER UDACS 2.07.01 AND 2.07.03.

11. NO CONCRETE THRUST BLOCKS SHALL BE WITHIN 5' OF ANY EXISTING SEWER MAIN.

12. WHERE PVC AND/OR DUCTILE IRON WATERLINES 24-INCHES IN DIAMETER AND SMALLER CROSS BELOW SEWER AND/OR STORM DRAIN MAINS, OR WHERE WATERLINES 24-INCHES IN DIAMETER AND SMALLER CROSS ABOVE SEWER AND/OR STORM DRAIN MAINS WITH A VERTICAL SEPARATION LESS THAN EIGHTEEN (18) INCHES, CONTRACTOR SHALL MITIGATE AGAINST THE POTENTIAL FOR CROSS CONTAMINATION. MITIGATION MEASURES SHALL COMPLY WITH UDACS 2.22.02.

13. WHERE PVC AND/OR DUCTILE IRON WATERLINES 24-INCHES IN DIAMETER AND SMALLER ARE INSTALLED WITH LESS THAN 10 FEET OF HORIZONTAL SEPARATION, CONTRACTOR SHALL MITIGATE AGAINST THE POTENTIAL FOR CROSS CONTAMINATION . MITIGATION MEASURES SHALL COMPLY WITH UDACS 2.22.01.

REGIONAL TRANSPORTATION COMMITTEE (RTC)
TRANSIT NOTES

1. THE CONTRACTOR SHALL NOT BE ALLOWED TO CLOSE MORE THAN ONE CONSECUTIVE BUS STOP ON THE SAME SIDE OF THE STREET. TEMPORARY BUS STOPS AND BUS STOP AMENITIES SHALL BE AMERICANS WITH DISABILITIES ACT (ADA) COMPLIANT AT ALL TIMES. THE CONTRACTOR SHALL NOTIFY RTC TRANSIT OF PROPOSED BUS STOP CLOSURES AND/OR BUS STOP AMENITY DISRUPTIONS VIA NOTIFYRTCTRANSIT@RTCSNV.COM AT LEAST SEVEN CALENDAR DAYS PRIOR TO THE START OF WORK. NOTIFICATION OF BUS STOP CLOSURES INVOLVING REMOVAL OF EXISTING AMENITIES SHALL BE PROVIDED TO RTC TRANSIT AT LEAST 10 CALENDAR DAYS PRIOR TO THE START OF WORK.

2. THE CONTRACTOR SHALL SUBMIT A BUS STOP CLOSURE SCHEDULE TO RTC TRANSIT WITH THE APPROVED TRAFFIC CONTROL PLAN AT LEAST SEVEN CALENDAR DAYS PRIOR TO THE START OF WORK. THE BUS STOP CLOSURE SCHEDULE SHALL IDENTIFY THE DURATION OF PROPOSED BUS STOP CLOSURES AND TEMPORARY BUS STOP RELOCATIONS AND TIMES OF DAY THAT STOPS ARE EXPECTED TO BE IMPACTED BY THE WORK. ALL BUS STOP CLOSURES, TEMPORARY BUS STOPS, AND TEMPORARY BUS TURN OUTS MUST BE APPROVED BY RTC TRANSIT STAFF PRIOR TO THE START OF WORK.

RTC-FAST NOTES

1. CONTRACTOR IS TO MAINTAIN AND KEEP OPERATIONAL ALL EXISTING INFRASTRUCTURE WITHIN THE CONSTRUCTION LIMITS. IF ANY EXISTING ITS INFRASTRUCTURE IS DAMAGED DUE TO CONSTRUCTION, WITHIN THE PROJECT LIMITS, THE CONTRACTOR SHALL IMMEDIATELY CONTACT MR. LONNIE BROWN (RTC/FAST MANAGER TRAFFIC SYSTEMS MAINTENANCE) AT 702-290-1979 CELL OR 702-432-5300 GENERAL.

2. IF ANY EXISTING FIBER OPTIC CABLE IS TO BE CUT, SPLICED, AND OR PULLED, ALONG OR ADJACENT TO THE PROJECT LIMITS, THE CONTRACTOR IS TO CONTACT MR. LONNIE BROWN TWO (2) WEEKS IN ADVANCE FOR SYSTEM SHUTDOWN COORDINATION.

DEVIATIONS FROM STANDARDS

THERE ARE NO DEVIATIONS FROM APPLICABLE STANDARDS.

CLARK COUNTY FIRE DEPARTMENT BUREAU'S GENERAL NOTES

A. ALL WORK SHALL BE DONE IN STRICT ACCORDANCE WITH THE CLARK COUNTY FIRE CODE AS AMENDED, AND THE CURRENT EDITION OF NATIONAL FIRE PROTECTION ASSOCIATION PAMPHLET #24.

B. FIRE HYDRANTS AND WATER SUPPLIES FOR FIRE PROTECTION SHALL BE AND MADE SERVICEABLE PRIOR TO AND DURING THE TIME OF CONSTRUCTION IN ACCORDANCE WITH SECTION 1412 OF THE CLARK COUNTY FIRE CODE, AS AMENDED.

C. IF DURING CONSTRUCTION IT BECOMES NECESSARY TO CLOSE ANY CONTROL VALVE OR PLACE A HYDRANT OUT OF SERVICE, APPROVAL SHALL BE OBTAINED FROM THE FIRE PREVENTION BUREAU PRIOR TO PLACING THE HYDRANT OUT OF SERVICE.

D. PAINTING OF CURBS AND/OR STRIPING OF ASPHALT AREAS AND PROTECTION OF HYDRANTS FROM PHYSICAL INJURY SHALL BE PER THE FIRE HYDRANT INSTALLATION SPECIFICATIONS OF THE FIRE PREVENTION BUREAU.

E. NO FIRE HYDRANT SHALL BE LOCATED WITHIN 25 FEET OF ANY STRUCTURE, OR 6 FEET OF A DRIVEWAY, POWER POLE, LIGHT STANDARD, OR ANY OTHER OBSTRUCTION. FOR WALL, FENCE AND PLANTER LOCATIONS, A PERIMETER AROUND THE HYDRANT MEASURING A MINIMUM OF 3 FEET FROM ITS EXTERIOR SHALL BE MAINTAINED CLEAR OF ALL OBSTRUCTION AT ALL TIMES.

F. FIRE APPARATUS ACCESS ROADS SHALL BE DESIGNED AND MAINTAINED TO SUPPORT THE IMPOSED LOADS OF FIRE APPARATUS, WITH A MINIMUM VEHICLE LOAD OF 33,000 POUNDS PER AXLE, AND SHALL BE SURFACED AND PAVED SO AS TO PROVIDE ALL-WEATHER DRIVING CAPABILITIES. EXCEPTION: TEMPORARY ACCESS ROADS SERVING ONLY BUILDINGS UNDER CONSTRUCTION SHALL NOT BE REQUIRED TO BE PAVED, BUT SHALL COMPLY WITH ALL OTHER REQUIREMENTS OF SECTION 503.2.3 OF THE CLARK COUNTY FIRE CODE.

G. PRIOR TO ACCEPTANCE OF ANY FIRE SERVICE MAIN, A SATISFACTORY HYDROSTATIC TEST WITH PIPING JOINTS UNCOVERED MUST BE CONDUCTED. APPROVED PLANS, AN INSTALLATION PERMIT AND A CONTRACTOR'S MATERIALS AND TEST CERTIFICATE MUST BE PROVIDED AT TIME OF INSPECTION. SCHEDULE INSPECTION AT <u>WWW.CLARKCOUNTYNV.GOV/DEPTS/DEVELOPMENT_SERVICES/FIRE_PREVENTION</u>.

H. FIRE HYDRANTS SHALL BE LOCATED 4' TO 7' FROM BACK OF CURB AND A MINIMUM OF 6 FEET AWAY FROM TURNS.

I. BLUE REFLECTIVE MARKERS MUST BE INSTALLED BEFORE FINAL HYDRANT ACCEPTANCE CAN BE ATTAINED (SECTION C107 OF THE CLARK COUNTY FIRE CODE, AS AMENDED).

J. HYDRANTS THAT ARE PROPOSED FOR INSTALLATION IN PUBLIC WATER SYSTEMS SHALL BE IN ACCORDANCE WITH APPROVED FIRE HYDRANTS AS ALLOWED BY THE WATER PURVEYOR. HYDRANTS PROPOSED FOR INSTALLATION ON PRIVATE WATER SYSTEMS SHALL BE IN ACCORDANCE WITH APPROVED FIRE HYDRANTS AS ALLOWED BY THE FIRE PREVENTION BUREAU.

FIRE DEPARTMENT APPROVAL

BY: _____ DATE: _____

APPROVAL OF THESE PLANS SHALL NOT BE CONSTRUED TO BE A PERMIT FOR, OR AN APPROVAL OF ANY VIOLATION OF ANY OF THE PROVISIONS OF STATE OR COUNTY LAWS.

APPROVAL OF THE FIRE DEPARTMENT HAVING JURISDICTION IS REQUIRED PRIOR TO OBTAINING FINAL APPROVAL FROM THE LAS VEGAS VALLEY WATER DISTRICT.

811 know what's below Call before you dig

SAFETY ALERT Call Before You Overhead 1-702-227-2929

LVVWD APPROVAL

APPROVED FOR CONSTRUCTION

LAS VEGAS VALLEY WATER DISTRICT PLANNING AND ENGINEERING SERVICES

PROJECT No. 139055 FIRST APPROVED DATE _____

UNION PACIFIC RAILROAD Call Before You Dig 1-800-336-9193

HIGH VOLTAGE UNDERGROUND ELECTRIC LINES, TELEPHONE AND STREET LIGHTING SYSTEM CONDUITS MAY BE PRESENT
CALL BEFORE YOU DIG
YOU'LL SEE UNDERGROUND

Call before you UnderGround 1-702-432-5300 FREEWAY AND ARTERIAL SYSTEM OF TRANSPORTATION

NO.	REVISIONS	DATE
		APPROVED

CLARK COUNTY NEVADA

LAS VEGAS BLVD WATERLINE REPLACEMENT - TROPICANA AVE TO FLAMINGO RD (PHASE E/F)

GENERAL NOTES

CLARK COUNTY, NEVADA, DEPARTMENT OF PUBLIC WORKS

PROFESSIONAL ENGINEER - STATE OF NEVADA
RAY P. MONTOYA
Exp. 12/31/2021
CIVIL
No. 025877
10/08/2021

PROJECT No: 500-897-LV-EF DRAWN BY: GAG/KAS/KMT
DESIGNED BY: ROM/GAG CHECKED BY: ALF/RPM/ROM
APPROVED BY _____

Kimley»Horn
6671 Las Vegas Boulevard South, Suite 320
Las Vegas, Nevada 89119 Tel. No.(702) 862-3600

SCALE
HORIZ: N/A
VERT: N/A
FIELD BOOK

DRAWING NO.
WG-3
SHT. 3 OF 80
L-2304

LAS VEGAS BOULEVARD WATERLINE IMPROVEMENTS

User: Gerardo.Gonzalez
Path: K:\TUC_Waterresources\096313000_Lasvegasblvd\CADD\LVB Phase E Water Plans\3.3.3.dwg
Kimley-Horn and Associates, Inc. assumes no responsibility for any reuse or alteration made to this document without written authorization and adaptation by Kimley-Horn and Associates, Inc. shall be without liability to Kimley-Horn and Associates, Inc.
This document is intended only for the specific purpose and client for which it was prepared. Reuse of and improper reliance on this document without written authorization and adaptation by Kimley-Horn and Associates, Inc. shall be without liability to Kimley-Horn and Associates, Inc.

CLARK COUNTY WATER RECLAMATION DISTRICT (CCWRD) GENERAL NOTES

1. ALL CONSTRUCTION SHALL CONFORM TO THE DESIGN AND CONSTRUCTION STANDARDS FOR WASTEWATER COLLECTION SYSTEMS, LATEST EDITION AND THE UNIFORM STANDARDS FOR PUBLIC WORKS OFFSITE IMPROVEMENTS, CLARK COUNTY AREA, LATEST EDITION.
2. ANY CONFLICTS BETWEEN THESE DOCUMENTS AND THE STANDARDS REFERENCED IN NOTE 1 MUST BE BROUGHT TO THE ATTENTION OF THE ENGINEER OF RECORD PRIOR TO PERFORMING ANY WORK.
3. ALL REVISIONS OF THE APPROVED PLANS MUST BE SUBMITTED TO THE CLARK COUNTY WATER RECLAMATION DISTRICT (DISTRICT) FOR REVIEW AND BE APPROVED PRIOR TO PROCEEDING WITH THE WORK. ALL WORK CONSTRUCTED WITHOUT THE APPROVAL OF THE DISTRICT MUST BE REMOVED AT THE CONTRACTORS EXPENSE.
4. ALL SANITARY SEWERS SHALL BE PVC SDR-35 SOLID WALL UNLESS OTHERWISE NOTED.
5. ALL SANITARY SEWER MAINS 8-INCHES AND LARGER AND ALL STUBS 8 INCHES AND LARGER ENTIRELY WITHIN THE PUBLIC RIGHT-OF-WAY SHALL BE PUBLIC UNLESS OTHERWISE NOTED. ALL ON-SITE SEWER INFRASTRUCTURE SHALL BE PRIVATE UNLESS OTHERWISE NOTED.
6. ALL SANITARY SEWER MAINS SHALL BE THE SAME MATERIAL, SIZE, & SLOPE BETWEEN MANHOLES.
7. ALL SEWER MAINS SHALL BE IN THEIR OWN TRENCHES. THERE WILL BE NO SHARED TRENCHES ALLOWED.
8. THE MINIMUM SLOPES FOR ALL PIPES SHALL BE IN ACCORDANCE WITH THE DESIGN AND CONSTRUCTION STANDARDS.
9. ALL SANITARY SEWER MANHOLES MUST BE LOCATED SUCH THAT THEY ARE ACCESSIBLE IN ACCORDANCE WITH THE DESIGN AND CONSTRUCTION STANDARDS.
10. A DEBRIS TRAP MUST BE INSTALLED IN THE EXISTING SYSTEM AT THE POINT OF CONNECTION IN ACCORDANCE WITH THE DESIGN AND CONSTRUCTION STANDARDS.
11. ALL EXISTING MANHOLE CORROSION PROTECTION SYSTEMS MUST BE RESTORED TO THEIR ORIGINAL CONDITION, IF MODIFIED.
12. LOCATOR RIBBON AND MARKER BALLS SHALL BE PLACED ABOVE ALL NEW SEWER MAINS AND LATERALS IN ACCORDANCE WITH THE DESIGN AND CONSTRUCTION STANDARDS.
13. ALL EXISTING GRADE MUST BE RAISED TO WITHIN 18-INCHES OF FINAL GRADE PRIOR TO ANY SEWER TRENCHING.
14. PRIVATE SANITARY SEWER NOT REVIEWED OR APPROVED BY CCWRD.

I CERTIFY THAT THE ONLY DEVIATIONS FROM THE DESIGN AND CONSTRUCTION STANDARDS THAT ARE APPROVED BY THE CCWRD ARE LISTED BELOW:

- NONE

Ray Montoya, PE, LICENSE #025877 DATE

SOUTHWEST GAS CORPORATION CONSTRUCTION NOTES

1. IN THE EVENT OF NATURAL GAS EMERGENCIES CALL 911 AND 1-877-860-6020.
2. MINIMUM HORIZONTAL AND VERTICAL CLEARANCES BETWEEN NATURAL GAS FACILITIES AND ANY UNDERGROUND UTILITIES AND/OR STRUCTURES, INCLUDING BUT NOT LIMITED TO WATER, SEWER, STORM DRAIN,COMMUNICATIONS, AND ELECTRIC SHALL BE AT LEAST 12-INCHES OR GREATER AS DICTATED BY LOCAL CODES AND STANDARDS)
   A. ANY DEVIATION FROM SPECIFIED MINIMUM CLEARANCES MUST BE APPROVED BY ALL AFFECTED UTILITIES AND/OR MUNICIPALITIES
3. FOR VALVE ADJUSTMENT CONTACT 702-528-7881 14 DAYS PRIOR TO CONSTRUCTION
4. IN THE EVENT OF A NATURAL GAS CONFLICT WITH PROPOSED UTILITIES AND STRUCTURES CONTACT 702-365-2099
5. FOR STANDBY WHEN EXCAVATING (INCLUDING SAW CUTTING AND PAVEMENT REMOVAL) OVER OR NEAR HIGH PRESSURE GAS LINES CONTACT 702-278-8451 48 HOURS PRIOR TO CONSTRUCTION

NDEP BUREAU OF SAFE DRINKING WATER (BSDW) GENERAL NOTES

1. ALL MATERIALS AND WATER SYSTEM COMPONENTS THAT COME IN CONTACT WITH POTABLE WATER ARE TO BE NSF CERTIFIED AS COMPATIBLE WITH DRINKING WATER. (NAC 445A.65825 (1)).
2. WATER LINES MUST BE DISINFECTED BY THE CONTRACTOR AND COLIFORM TESTS TAKEN BY THE OWNER IN ACCORDANCE WITH SPECIFICATION SECTION 753 AND AWWA C651-05. COLIFORM RESULTS ARE TO BE SUBMITTED BY THE OWNER TO BSDW FOR REVIEW AND APPROVAL PRIOR TO PLACING THE WATER LINES INTO SERVICE. (NAC 445A.67145 (6)).
3. WATER LINES ARE TO BE PRESSURE TESTED IN ACCORDANCE WITH SPECIFICATION SECTION 753 AND AWWA C600-10 OR AWWA C605-13. (NAC 445A.67145 (7)).
4. RESERVOIRS MUST BE DISINFECTED BY THE CONTRACTOR IN ACCORDANCE WITH SPECIFICATION SECTION 33 13 01 AND COLIFORM TESTS TAKEN BY THE OWNER PER AWWA C652-11 AND SUBMITTED TO BSDW FOR REVIEW AND APPROVAL PRIOR TO PLACING THE RESERVOIR INTO SERVICE. (NAC 445A.67085 (3)). (NOT USED THIS PROJECT)
5. RESERVOIRS MUST NOT BE PLACED INTO SERVICE UNTIL THE OWNER HAS COLLECTED AND SUBMITTED VOLATILE ORGANIC CHEMICALS (VOC) TEST TO BSDW IN ACCORDANCE WITH AWWA C652. (NAC 445A.67085 (2)) (NAC 445A.67085 (2)). (NOT USED THIS PROJECT)
6. PIPE AND APPURTENANCES MUST BE SEALED AT THE END OF EACH WORKDAY TO PREVENT ENTRY OF ANIMALS, DIRT, WATER, AND OTHER SOURCES OF CONTAMINATION OF POLLUTION. (NAC 445A.67145 (8)).

HORIZONTAL CONTROL NOTES

1. CONTRACTOR SHALL REFER TO SHEETS HC-1 THROUGHT HC-8 OF PROJECT NUMBER L-2304 FOR HORIZONTAL CONTROL INFORMATION, INCLUDING SURVEY DATUM, LINE AND POINT COORDINATES, BENCHMARKS, BASIS OF BEARINGS, MONUMENTS, CONTROL POINTS, ETC.
2. STATIONING AND OFFSET INFORMATION WITHIN THIS PLAN SET ARE BASED ON "LAS VEGAS BOULEVARD PRIMARY CONTROL LINE", "LVB", ALIGNMENT, AS DEFINED WITHIN THE HORIZONTAL CONTROL SHEETS OF PROJECT L-2304.
3. INFORMATION PROVIDED IN THIS TABLE IS MEANT TO SUPPLEMENT HORIZONTAL AND VERTICAL INFORMATION FOR THE 36" AND 30" MLTC PIPELINE DETAILED WITHIN THIS PLAN SET.

PROJECT PIPELINE CONTROL COORDINATE TABLE

HORIZONTAL: U.S. SURVEY FEET VERTICAL: N.A.V.D 88 U.S. SURVEY FEET

POINT #	NORTHING	EASTING	INVERT ELEV	℄ PIPELINE DESCRIPTION	STATION, OFFSET
1	742657.5964	77589.2540	2120.32	BEGIN CONSTRUCTION – 36" MLTCP	147+25.00, 3.38'L
2	743036.0708	77584.9319	2119.25	36"X24" MLTC REDUCER	151+03.50, 3.87'L
3	743690.5728	77590.0889	2116.84	36"X24" MLTC REDUCER	157+57.92, 7.92'R
4	744083.6031	77588.9654'	2112.92	36" MLTCP – HORZ. ANGLE POINT – ∠0.233°	161+50.94, 10.78'R
5	744546.0746	77585.8406	2112.16	36" MLTCP – HORZ. ANGLE POINT – ∠12.939°	166+13.42, 12.34'R
6	744558.5564	77582.8840	2112.11	36" MLTCP – HORZ. ANGLE POINT – ∠12.969°	166+25.93, 9.51'R
7	744654.1013	77582.2881	2111.76	36" MLTCP – HORZ. ANGLE POINT – ∠11.220°	167+21.47, 9.88'R
8	744668.3097	77585.0147	2111.71	36" MLTCP – HORZ. ANGLE POINT – ∠11.250°	167+35.65, 12.75'R
9	745711.2242	77577.9679	2107.32	36" MLTCP – HORZ. ANGLE POINT – ∠22.500°	177+78.59, 16.27'R
10	745762.8466	77556.1755	2107.04	36" MLTCP – HORZ. ANGLE POINT – ∠22.500°	178+30.43, 5.00'L
11	746070.5558	77554.0963	2105.52	36"x24" MLTC REDUCER – END CONSTRUCTION	181+38.14, 3.96'L
12	743265.8209	77414.9606	2118.59	30"x24" MLTC REDUCER @ TROPICANA AVE	159+34.96, 171.50'L
14	743269.4736	77407.2855	2119.60	END CONSTRUCTION – 30" MLTCP	153+38.69, 179.14'L
15	746100.5107	77629.3107	2104.06	36"x24" MLTC REDUCER @ HARMON AVE	181+67.33, 71.56'R
16	746092.1075	77638.1207	2103.16	END CONSTRUCTION – 36" MLTCP	181+58.84, 80.28"R

LAS VEGAS BOULEVARD WATERLINE IMPROVEMENTS

CCWRD APPROVAL

CLARK COUNTY WATER RECLAMATION DISTRICT DATE

CCWRD PIPES NUMBER IS 21,955
SIGNATURE ON THESE PLANS SHALL NOT BE CONSTRUED TO BE A PERMIT FOR OR THE APPROVAL OF ANY VIOLATION OF CLARK COUNTY WATER RECLAMATION DISTRICT RULES, REGULATIONS, OR DESIGN AND CONSTRUCTION STANDARDS.

LVVWD APPROVAL

APPROVED FOR CONSTRUCTION

LAS VEGAS VALLEY WATER DISTRICT PLANNING AND ENGINEERING SERVICES

PROJECT No. 139055 FIRST APPROVED DATE

811 know what's below Call before you dig

SAFETY ALERT Call Before You Overhead 1-702-227-2929

UNION PACIFIC RAILROAD Call Before You Dig 1-800-336-9193

Call before you UnderGround 1-702-432-5300 (TRUCKEE AND ARTESIAN SYSTEM OF TRANSPORTATION)

NO.	REVISIONS	DATE
		APPROVED

CLARK COUNTY NEVADA

LAS VEGAS BLVD WATERLINE REPLACEMENT - TROPICANA AVE TO FLAMINGO RD (PHASE E/F)

GENERAL NOTES

CLARK COUNTY, NEVADA, DEPARTMENT OF PUBLIC WORKS

PROFESSIONAL ENGINEER - STATE OF NEVADA
RAY P. MONTOYA
Exp. 12/31/2021
CIVIL
No. 025877
10/08/2021

PROJECT No: 500-897-LV-EF DRAWN BY: GAG/KAS/KMT
DESIGNED BY: ROM/GAG CHECKED BY: ALF/RPM/ROM
APPROVED BY

Kimley»Horn
6671 Las Vegas Boulevard South, Suite 320
Las Vegas, Nevada 89119
Tel. No.(702) 862-3600

SCALE
HORIZ: N/A
VERT: N/A
FIELD BOOK

DRAWING NO.
WG-4
SHT. 4 OF 80
L-2304

User: Gerardo.Gonzalez
Path: A:\TLC_Westfieldresources\2083130\0_Lasvegasblvd\CADD\LVB Phase E Water Plans\3_C3.dwg
Kimley-Horn and Associates, Inc. shall be without liability to Kimley-Horn and Associates, Inc. Reuse of and improper reliance on this document without written authorization and adaptation by Kimley-Horn and Associates, Inc. shall be without liability to Kimley-Horn and Associates, Inc.

LAS VEGAS BOULEVARD WATERLINE IMPROVEMENTS

– A –	
A/C	AIR CONDITIONING
AB	ANCHOR BOLT
ABAN	ABANDON
ABAND/ABND	ABANDONED
ABC	AGGREGATE BASE COURSE
ABS	ABSOLUTE
ABUT	ABUTMENT
ABV	ABOVE
AC	ASPHALTIC CONCRETE
ACKV	AUTOMATIC CHECK VALVE
ACP	ASBESTOS CEMENT PIPE
ACS	ACCESS
ADA	AMERICAN DISABILITY ACT
AD	AREA DRAIN
ADDL	ADDITIONAL
ADDM	ADDENDUM
ADJ	ADJUSTABLE
AGGR	AGGREGATE
AHD	AHEAD
AL	ALUMINUM
ALT	ALTERNATE
AMS	ANGLE METER STOP
AMT	AMOUNT
&	AND
ANSI	AMERICAN NATIONAL STANDARDS INSTITUTE
ANT	ANTENNA
AP	ACCESS PANEL
APN	ASSESSOR PARCEL NUMBER
APPROX	APPROXIMATE
APPVD	APPROVED
ASPH	ASPHALT
ASSN	ASSOCIATION
ASSY	ASSEMBLY
ASTM	AMERICAN SOCIETY OF TESTING MATERIALS
AUX	AUXILIARY
AV	AIR VENT/AIR VALVE
AVAR	AIR VACUUM AIR RELEASE VALVE
AVE	AVENUE
AWG	AMERICAN WIRE GAUGE
AWWA	AMERICAN WATER WORKS ASSOCIATION
– B –	
B/H	BUMPED HEAD
B&S	BELL & SPIGOT
BAL	BALANCE
BC	BOLT CIRCLE/BACK OF CURB
BCV	BUTTERFLY CHECK VALVE
BE	BELL END
BETW	BETWEEN
BFP	BACKFLOW PREVENTER
BFV	BUTTERFLY VALVE
BK	BOOK/BACK
BL–FLG	BLIND FLANGE
BLDG	BUILDING
BLK	BLOCK
BLM	BUREAU OF LAND MANAGEMENT
BLVD	BOULEVARD
BM	BENCHMARK
BO	BLOW OFF ASSEMBLY
BOC	BACK OF CURB
BOT	BOTTOM
BOW	BACK OF WALK
BPV	BACK PRESSURE VALVE
BRG	BEARING
BS	BACK SIGHT
BUR	BURIED
BV	BALL VALVE
BW	BOTH WAYS/BACK OF SIDEWALK
– C –	
C/C	CENTER TO CENTER
C	CONDUIT
C&G	CURB & GUTTER
CAL	CALIBRATE
CAP	CAPACITY
CAV	COMBINATION AIR VALVE
CB	CATCH BASIN
CCFR	CENTRIFUGALLY FIBERGLASS REINFORCED PIPE

– C – (CONT.)	
CCO	CLARK COUNTY
CEM	CEMENT
CI	CAST IRON
CIP	CAST IRON PIPE/CAST IN PLACE
CIR	CIRCLE
CIRCUM	CIRCUMFERENCE
CJP	COMPLETE JOINT PENETRATION
CL OR ℄	CENTERLINE
CL2	CHLORINE
CLG	CEILING
CLO	CLEANOUT
CLP	CLAMP
CLR	CLEAR
CLSM	CONTROLLED LOW STRENGTH MATERIAL
CLV	CITY OF LAS VEGAS
CM	CENTIMETER
CMP	CORRUGATED METAL PIPE
CMU	CONCRETE MASONRY UNIT
CNLV	CITY OF NORTH LAS VEGAS
CO	COUNTY/COMPANY/CONTRACT
COH	CITY OF HENDERSON
COL	COLUMN
COMB	COMBINATION
COMM	COMMUNICATION
COMPL	COMPLETE
CON	CONCENTRIC
CONC	CONCRETE
CONN	CONNECTION
CONST	CONSTRUCTION
CONT	CONTINUE OR CONTINUOUS
CONTR	CONTRACTOR
COORD	COORDINATE
COR	CORNER
CORP STOP	CORPORATION STOP
COV PL	COVER PLATE
CPLG	COUPLING
CPVC	CHLORINATED POLYVINYL CHLORIDE PIPE
CT	COURT
CTR	CENTER
CTV	CABLE TELEVISION
CU	CUBIC/COPPER
CUST	CUSTOMER
CV	CONTROL VALVE
CW	CLOCKWISE
CY	CUBIC YARD
CYL	CYLINDER
– D –	
D OR △	DELTA ANGLE
DCSWCS	DESIGN & CONSTRUCTION STD. FOR WASTEWATER COLLECTION SYSTEMS
D/W	DRIVEWAY
DEC	DECIMETER
DEMO	DEMOLITION
DEPT	DEPARTMENT
DET	DETAIL
DEV	DEVELOPMENT
DI	DROP INLET OR DUCTILE IRON
DIA OR Ø	DIAMETER
DIAG	DIAGONAL
DIM	DIMENSION
DIP	DUCTILE IRON PIPE
DIR	DIRECTION
DISCH	DISCHARGE
DIST	DISTANCE
DISTR	DISTRIBUTION
DIV	DIVISION
DL	DEAD LOAD
DMH	DROP MANHOLE
DN	DOWN
DR	DRIVE
DRW	DRY WELL
DUPL	DUPLICATE
DWG	DRAWING
– E –	
E	EAST OR EDGE
EA	EACH
EC	EPOXY COATED/END OF CURB
ECC	ECCENTRIC
EF	EACH FACE

– E – (CONT.)	
EL	EPOXY LINED
ELEC	ELECTRICAL
ELEV	ELEVATION
ELL	ELBOW
ENG	ENGINE/ENGINEERING
ENGR	ENGINEER
EOP	EDGE OF PAVEMENT
EOS	EDGE OF SHOULDER
EQ	EQUAL OR EQUATION
EQ SP	EQUALLY SPACED
EQUIP	EQUIPMENT
EQUIV	EQUIVALENT
ESMT	EASEMENT
EST	ESTIMATE
ETC	ETCETERA
EW	EACH WAY
EXC	EXCAVATE
EXIST/ EX	EXISTING
EXP JT	EXPANSION JOINT
EXT	EXTENSION
– F –	
F/F	FACE TO FACE
FABR	FABRICATION/FABRICATED
FC	FACE OF CURB
FD	FLOOR DRAIN
FDN	FOUNDATION
FEXT	FIRE EXTINGUISHER
FF	FINISHED FLOOR
FG	FINISHED GRADE
FH	FIRE HYDRANT
FIG	FIGURE
FL OR ℄	FLOW LINE
FLG	FLANGE
FLR	FLOOR
FMCT	FLOW METER COMPOUND TORRENT
FMH	FLEXIBLE METAL HOSE
FN	FENCE
FND	FOUND
FO	FIBER OPTIC
FOC	FACE OF CURB
FOW	FACE OF WALL
FPC	FLEXIBLE PIPE COUPLING
FPM	FEET PER MINUTE
FPS	FEET PER SECOND
FPT	FEMALE PIPE THREAD
FREQ	FREQUENCY
FRP	FIRE RETARDANT POLYESTER RESIN/ FIBERGLASS REINFORCED POLYMER
FSTNR	FASTENER
FT	FOOT OR FEET
FTG	FOOTING
FUT	FUTURE
– G –	
G/B	GRADE BREAK
G	GAS
GA	GAGE
GAL(S)	GALLON(S)
GALV	GALVANIZED
GENL	GENERAL
GIS	GEOGRAPHIC INFORMATION SYSTEM
GND	GROUND
GPD	GALLONS PER DAY
GPH	GALLONS PER HOUR
GPM	GALLONS PER MINUTE
GRD	GRADE
GRT	GRATE
GV	GATE VALVE
– H –	
H	HOUSE
H&V	HEATING & VENTILATION
HARN	HIGH ACCURACY FREQUENCY NETWORK
HB	HOSE BIBB
HD	HEAD
HDR	HEADER
HEX	HEXAGONAL
HMWPE	HIGH MOLECULAR WEIGHT POLYETHYLENE
HORIZ	HORIZONTAL
HP	HORSEPOWER
HPI	HORIZONTAL POINT OF INTERSECTION

– H – (CONT.)	
HPG	HIGH PRESSURE GAS
HR	HOUR
HT	HEIGHT
HV	HOSE VALVE
HWY	HIGHWAY
– I –	
ID	INSIDE DIAMETER
IN	INCH
INST	INSTALL
INSTR	INSTRUMENT
INSUL	INSULATION
INT	INTERIOR
INV	INVERT
IPS	IRON PIPE SIZE
IRR	IRRIGATION
– J –	
JT	JOINT
– K –	
kg	KILOGRAM
km	KILOMETER
– L –	
LAD	LADDER
LB OR #	POUND
LDR	LEADER
LEN OR L	LENGTH OF CURVATURE
LF	LINEAR FOOT
LG	LONG
LN	LANE
LT	LEFT/LIGHT
LVVWD	LAS VEGAS VALLEY WATER DISTRICT
LWR	LOWER
– M –	
M	METER
MATL	MATERIAL
MAX	MAXIMUM
MC	MORTAR COATED
MEAS	MEASUREMENT
MECH	MECHANICAL
MFR	MANUFACTURER
MG	MILLION GALLONS
MGD	MILLION GALLONS PER DAY
MH	MANHOLE
MIN	MINIMUM
MISC	MISCELLANEOUS
MJ	MECHANICAL JOINT
MKR	MARKER
ML	MORTAR LINED
MLC	MORTAR LINED & COATED
MLCP	MORTAR LINED & COATED PIPE
MLTCP	MORTAR LINED & COATED TAPE WRAPPED PIPE
MON	MONUMENT
MOV	MOTOR OPERATED VALVE
MPT	MALE PIPE THREAD
MSD	MAIN SERVICE DISTRIBUTION
MSDS	MATERIAL SAFETY DATA SHEET
MTD	MOUNTED
– N –	
N	NORTH
N/A	NOT APPLICABLE
NaOCL	SODIUM HYPOCHLORITE
NAVD	NORTH AMERICAN VERTICAL DATUM
NAP	NOT–A–PART
NBS	NATIONAL BUREAU OF STANDARDS
NC	NATIONAL COARSE
NCS	NEVADA COORDINATE SYSTEM
NDOT	NEVADA DEPARTMENT OF TRANSPORTATION
NE	NORTHEAST
NF	NORTH FACE
NFPA	NATIONAL FIRE PROTECTION ASSOCIATION
NG	NATURAL GROUND
NIC	NOT IN CONTRACT
NIP	NOT IN PROJECT
NO. #	NUMBER
NOM	NOMINAL
NOSHA	NEVADA OCCUPATIONAL SAFETY AND HEALTH ADMINISTRATION

– N – (CONT.)	
NPC	NEVADA POWER COMPANY
NPS	NOMINAL PIPE SIZE
NPT	NATIONAL TAPER PIPE THREAD
NRS	NEVADA REVISED STATUTES/ NON–RISING STEM
NSF	NSF INTERNATIONAL
NTS	NOT TO SCALE
NW	NORTHWEST
– O –	
O/O	OUT TO OUT
OC	ON CENTER
OD	OUTSIDE DIAMETER
OF	OUTSIDE FACE
OFC	OFFICE
OH	OVER HEAD
OHP	OVER HEAD POWER
OHTEL	OVER HEAD TELEPHONE
OPER	OPERATOR
OPNG	OPENING
OPP	OPPOSITE
ORF	ORIFICE
ORIG	ORIGINAL
OS&Y	OUTSIDE SCREW & YOKE
OSHA	OCCUPATIONAL SAFETY AND HEALTH ADMINISTRATION
OVFL	OVERFLOW
oz	OUNCE
– P –	
P	POLE/PRESSURE/PIPE/POWER
P/L /℄	PROPERTY LINE
PAT	PATENT
PAVMT	PAVEMENT
PB	PULL BOX
PC	PRESSURE CLASS
PCC/PCCP	PRESTRESSED CONCRETE CYLINDER PIPE
PDL	PUMP DISCHARGE LINE
PE	PLAIN END/POLYETHYLENE PIPE
PED	PEDESTAL
PERM	PERMANENT
PERP	PERPENDICULAR
PG	PRESSURE GAGE
PH	PHASE
PI	POINT OF INTERSECTION
PIP	PROTECT IN PLACE
PHYD	POST HYDRANT
PKG	PACKAGE
PKWY	PARKWAY
PL	PLACE/PLATE/PARCEL LINE
PLS	PROFESSIONAL LAND SURVEYOR
PLT	PLATE (DRAWING)
PO	PUSH–ON
POLY	POLYETHYLENE
PP	POWER POLE
PPM	PARTS PER MILLION
PR	PAIR
P/R	PATENT RESERVATION
PRC	PRECAST REINFORCED CONCRETE
PRELIM	PRELIMINARY
PRIM	PRIMARY
PROP	PROPOSED
PRV	PRESSURE REGULATING VALVE
PS	PRESSURE SWITCH/PUMP STATION
PSF	POUNDS PER SQUARE FOOT
PSI	POUNDS PER SQUARE INCH
PT	POINT/POINT OF TANGENCY
PV	PLUG VALVE
PVC	POLYVINYL CHLORIDE PIPE
– Q –	
QCV	QUICK COUPLER VALVE
QDC	QUICK DISCONNECT COUPLING
QS	QUAD SHEET
QTR	QUARTER
QTY	QUANTITY
– R –	
R	RADIUS
(R)	RADIAL
R/W	RIGHT–OF–WAY
RCB	REINFORCED CONCRETE BOX
RCP	REINFORCED CONCRETE PIPE

– R – (CONT.)	
RD	ROAD
REC	RECESSED
RECT	RECTANGULAR
RED	REDUCER
REF	REFERENCE (DIMENSION)
REG	REGULATING (REGULATOR)
REINF	REINFORCED (REBAR)
REQD	REQUIRED
RES	RESIDENTIAL OR RESERVOIR
RET	RETURN
REV	REVISION OR REVERSE
RF	RAISED FACE
RM	ROOM
RME	RESIDENTIAL MAIN EXTENSION
RPM	REVOLUTIONS PER MINUTE
RPS	REVOLUTIONS PER SECOND
RPPA	REDUCED PRESSURE PRINCIPLE ASSEMBLY
RR	RAILROAD
RSGV	RESILIENT SEATED GATE VALVE
RT	RIGHT/RING TITE
RV	RELIEF VALVE
– S –	
S	SOUTH/SLOPE
SA	SAMPLE LINE
S/C	SAW CUT
SCCP	STEEL CYLINDER CONCRETE PIPE
SCH	SCHEDULE
SD	STORM DRAIN
SDWK	SIDEWALK
SE	SOUTHEAST
SEC	SECTION/SECOND(ARY)
SEG	SEGMENT
SHLDR	SHOULDER
SHT	SHEET
SID	SPECIAL IMPROVEMENT DISTRICT
SIG	SIGNAL
SIM	SIMILAR
SL	SLOPE
SLV	SLEEVE
SNWA	SOUTHERN NEVADA WATER AUTHORITY
SNWS	SOUTHERN NEVADA WATER SYSTEM
SO	STUBOUT
SPC	STATE PLANE COORDINATES
SPEC(S)	SPECIFICATION(S)
SQ	SQUARE
SQ FT	SQUARE FOOT (FEET)
SQ YD	SQUARE YARD
SR	SAMPLE RETURN
SRM	SINGLE RESIDENTIAL MAIN
SS	SANITARY SEWER
SSTL	STAINLESS STEEL
ST	STREET
STA	STATION
STD	STANDARD
STIR	STIRRUP
STL	STEEL
STLT	STREET LIGHT
SUPPL	SUPPLEMENT
SUR	SURVEY
SV	SOLENOID VALVE
SW	SIDEWALK OR SOUTHWEST
SY	SQUARE YARD
SYM	SYMBOL
SYMM	SYMMETRICAL
SYS	SYSTEM
– T –	
T	THICKNESS OF WELD
T	TELEPHONE/TANGENT
T&B	TOP & BOTTOM
T&G	TONGUE AND GROOVE
TAN	TANGENT
TBE	THREAD BOTH ENDS
TBM	TEMPORARY BENCH MARK
TC	TOP OF CURB
TD	TRENCH DRAIN
TDH	TOTAL DYNAMIC HEAD
TEMP	TEMPORARY

– T – (CONT.)	
THK	THICK(NESS)
THR BLK	THRUST BLOCK
THRD	THREADED
TK	TANK
TMH	TOP OF MANHOLE
TOE	THREAD ONE END
TOF	TOP OF FOOTING
TOG	TOGETHER
TOGR	TOP OF GRATE
TOP	TOP OF PIPE
TOR	TOP OF RIM
TOS	TOP OF SLAB
TOSTL	TOP OF STEEL
TOSW	TOP OF SIDEWALK
TOT	TOTAL
TOW	TOP OF WALL
TP	TELEPHONE POLE/TOP OF PIPE
TR	TRAIL OR TRACK/TOP OF RIM
TRANS	TRANSITION/TRANSMISSION
(TYP)	TYPICAL
– U –	
UDS	UNIFORM DESIGN AND CONSTRUCTION STANDARDS FOR WATER DISTRIBUTION SYSTEMS, CLARK COUNTY, NV
UE	UNDERGROUND ELECTRIC
UFC	UNIFORM FIRE CODE
UG	UNDERGROUND
UGC	UNDERGROUND CONDUIT
UGP	UNDERGROUND POWER
UGT	UNDERGROUND TELEPHONE
UL	UNDERWRITERS LABORATORIES
UNC	AMERICAN STANDARD UNIFIED COARSE THREAD
UNF	AMERICAN STANDARD UNIFIED FINE THREAD
UNIV	UNIVERSAL
UNO	UNLESS NOTED OTHERWISE
UPC	UNIFORM PLUMBING CODE
UPRR	UNION PACIFIC RAILROAD
USGS	UNITED STATES GEODETIC SURVEY
UTIL	UTILITIES
– V –	
V	VOLT OR VALVE
VAC	VACUUM
VAR	VARIES
VB	VALVE BOX
VCP	VITRIFIED CLAY PIPE
VEL	VELOCITY
VENT	VENTILATOR
VERT	VERTICAL
VFD	VARIABLE FREQUENCY DRIVE
VG	VALLEY GUTTER
VHF	VERY HIGH FREQUENCY
VIB	VIBRATION
VIN	VINYL
VISC	VISCOSITY
VOL	VOLUME
VPI	VERTICAL POINT OF INTERSECTION
VS	VALVE SHEET
VT	VENT
– W –	
W/	WITH
W	WEST/WATER
W/O	WITHOUT
WD	WIDTH
WDN	WASTE DRAIN
WF	WIDE FLANGE
WH	WALL HYDRANT
WI	WROUGHT IRON
WL	WASTE LINE
WLD	WELDED
WM	WATER METER
WP	WORK POINT
WS	WATER SURFACE
WSP	WELDED STEEL PIPE
WSTP	WATER STOP
WT	WEIGHT
WTR	WATER
WV	WATER VALVE
WWF	WELDED WIRE FABRIC
WWM	WELDED WIRE MESH
– X –	
XARM	CROSS ARM
XFMR	TRANSFORMER
XFR	TRANSFER
XSEC	CROSS SECTION
– Y –	
YD	YARD
YH	YARD HYDRANT
YLD	YIELD

NO.	REVISIONS	DATE
		APPROVED

CLARK COUNTY NEVADA

LAS VEGAS BLVD WATERLINE REPLACEMENT - TROPICANA AVE TO FLAMINGO RD (PHASE E/F)

ABBREVIATION LIST

CLARK COUNTY, NEVADA, DEPARTMENT OF PUBLIC WORKS

PROFESSIONAL ENGINEER - STATE OF NEVADA
RAY P. MONTOYA
Exp. 12/31/2021
CIVIL
No. 025877
10/08/2021

PROJECT No: 500-897-LV-EF	DRAWN BY: GAG/KAS/KMT	SCALE	DRAWING NO.
DESIGNED BY: ROM/GAG	CHECKED BY: ALF/RPM/ROM	HORIZ: N/A	WG-5
APPROVED BY		VERT: N/A	SHT. 5 OF 80
		FIELD BOOK	
			L-2304

Kimley»Horn
6671 Las Vegas Boulevard South, Suite 320
Las Vegas, Nevada 89119
Tel. No.(702) 862-3600

User: Gerardo.Gonzalez
Path: K:\LVC_Water\Resources\Projects\WWTP\LAS VEGAS BLVD PHASE E WATER PIPELINE\CADD\LVB Phase E Water Plans\4_G4.dwg
Copyright © 2021 Kimley-Horn and Associates, Inc. This document, together with the concepts and designs presented herein, is intended only for the specific purpose and client for which it was prepared. Reuse of and improper reliance on this document without written authorization and adaptation by Kimley-Horn and Associates, Inc. shall be without liability to Kimley-Horn and Associates, Inc.

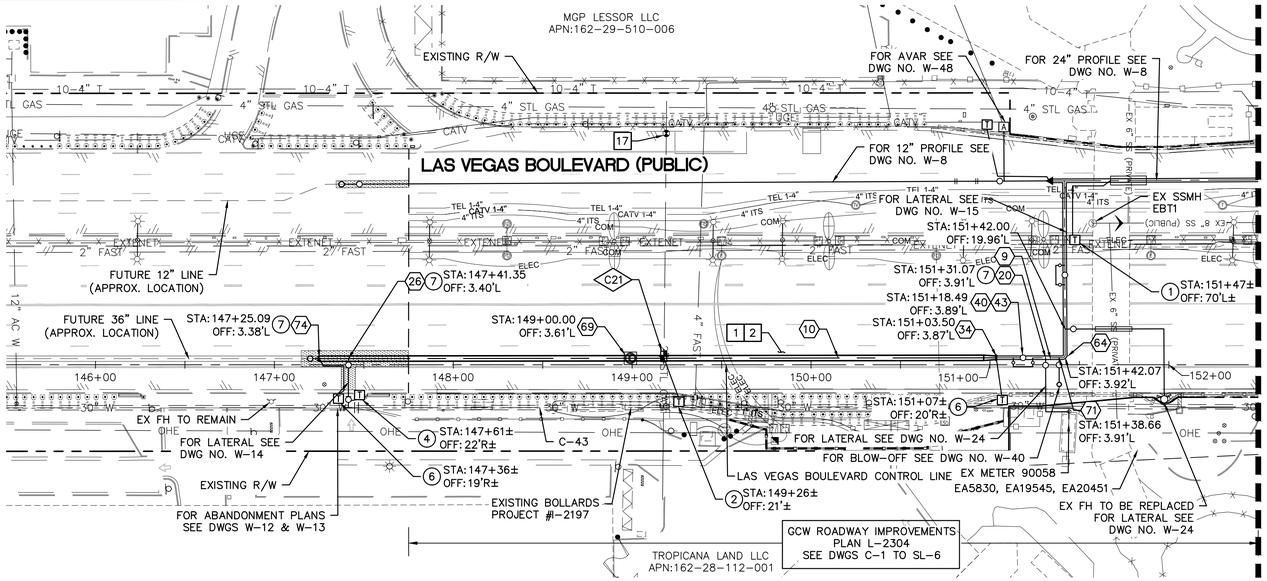

FOR EXISTING GAS LINES, EXACT DEPTH AND LOCATION UNKNOWN. CONTRACTOR TO LOCATE VERTICALLY AND HORIZONTALLY PRIOR TO ANY EXCAVATION OPERATIONS.

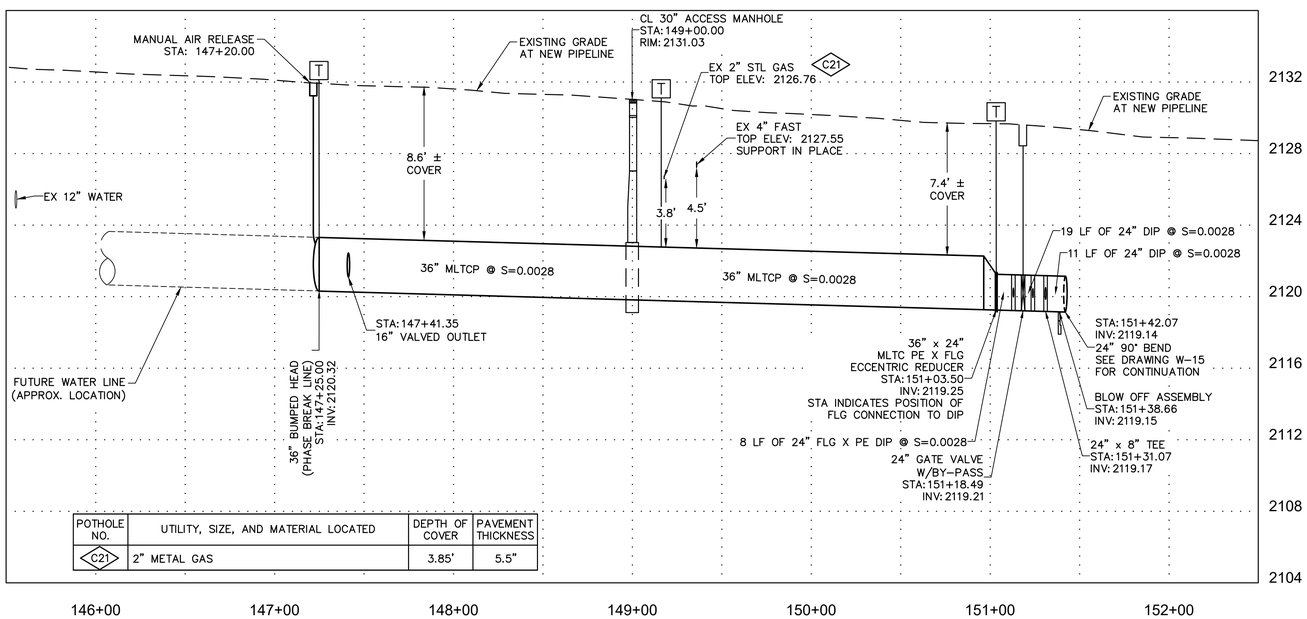

POTHOLE NO.	UTILITY, SIZE, AND MATERIAL LOCATED	DEPTH OF COVER	PAVEMENT THICKNESS
C21	2" METAL GAS	3.85'	5.5"

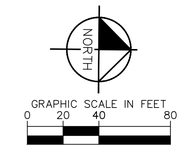

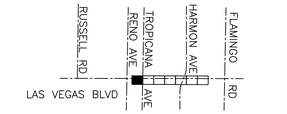

KEY MAP

NTS

CONSTRUCTION INDEX

- (9) INSTALL 24" DIP, RESTRAIN AND BOND ALL JOINTS
- (10) INSTALL 36" MLTC PIPE, WELD ALL JOINTS, STA 147+25 THROUGH STA 181+35
- (20) INSTALL 24" X 8" TEE, RESTRAIN JOINTS
- (26) INSTALL 16" VALVED OUTLET PER DETAILS 2 & 3 ON DWG WD-10 & DETAIL 2 ON DWG WD-11
- (34) INSTALL 36" X 24" MLTC REDUCER, WELDED FLANGE WITH FLANGE INSULATING KIT
- (40) INSTALL 24" GATE VALVE PER DETAILS 2 & 3 ON DWGS WD-10 & WD-11
- (43) INSTALL 6" DIP BYPASS ASSEMBLY W/ 6" GATE VALVES, RESTRAIN JOINTS (NOT THRUST BLOCKED), PER DETAIL 2 ON DWG WD-10 & DETAIL 2 & 3 DWG WD-11
- (64) INSTALL 24" X 90° BEND, RESTRAIN JOINTS
- (69) INSTALL PIPE ACCESS MANHOLE PER DETAILS 3 & 4 ON DWG WD-8
- (71) INSTALL BLOW-OFF ASSEMBLY PER DETAIL 2 ON DWG WD-9
- (74) INSTALL BUMPED HEAD AT END OF PIPE WITH AIR RELEASE VALVE ASSEMBLY PER DETAIL 4 ON DWG WD-10

CONSTRUCTION NOTES

- [1] ALL TRENCH PER DETAILS ON DWG WD-1
- [2] SAWCUT AND/OR MATCH EXISTING GRADE. CONTRACTOR TO COORDINATE W/ CLARK COUNTY INSPECTOR FOR SAWCUT LOCATIONS
- [17] ONLY SWG CREWS CAN ADJUST SWG VALVES. SEE SWG NOTE 3 ON WG-4

CATHODIC PROTECTION

- (1) INSTALL TYPE C (CASING) TEST STATION PER DETAIL 1 ON DWG WD-21
- (2) INSTALL TYPE F (FOREGIN) TEST STATION PER DETAIL 2 ON DWG WD-20
- (4) INSTALL TYPE I (INSULATED) TEST STATION PER DETAIL 3 ON DWG WD-20
- (6) INSTALL TYPE T (TYPICAL) TEST STATION PER DETAIL 2 ON DWG WD-21
- (7) INSTALL FLANGE INSULATING KIT PER DETAIL 1 ON DWG WD-22

FIRE DEPARTMENT APPROVAL

BY: _____ DATE: _____

APPROVAL OF THESE PLANS SHALL NOT BE CONSTRUED TO BE A PERMIT FOR, OR AN APPROVAL OF ANY VIOLATION OF ANY OF THE PROVISIONS OF STATE OR COUNTY LAWS.

APPROVAL OF THE FIRE DEPARTMENT HAVING JURISDICTION IS REQUIRED PRIOR TO OBTAINING FINAL APPROVAL FROM THE LAS VEGAS VALLEY WATER DISTRICT.

CCWRD APPROVAL

CLARK COUNTY WATER RECLAMATION DISTRICT DATE

CCWRD PIPES NUMBER IS 21,955.
SIGNATURE ON THESE PLANS SHALL NOT BE CONSTRUED TO BE A PERMIT FOR OR THE APPROVAL OF ANY VIOLATION OF CLARK COUNTY WATER RECLAMATION DISTRICT RULES, REGULATIONS, OR DESIGN AND CONSTRUCTION STANDARDS.

LVVWD APPROVAL

APPROVED FOR CONSTRUCTION

LAS VEGAS VALLEY WATER DISTRICT PLANNING AND ENGINEERING SERVICES

PROJECT No. 139055 FIRST APPROVED DATE _____

811 know what's below Call before you dig

SAFETY ALERT Call Before You Overhead 1-702-227-2929

UNION PACIFIC RAILROAD Call Before You Dig 1-800-336-9193

Call before you UnderGround 1-702-432-5300

NO.	REVISIONS	DATE
		APPROVED

CLARK COUNTY NEVADA

LAS VEGAS BLVD WATERLINE REPLACEMENT - TROPICANA AVE TO FLAMINGO RD (PHASE E/F)

36" WATER MAIN - PLAN AND PROFILE STA 145+50 TO STA 152+50

CLARK COUNTY, NEVADA, DEPARTMENT OF PUBLIC WORKS

PROFESSIONAL ENGINEER - STATE OF NEVADA
RAY P. MONTOYA
Exp. 12/31/2021
CIVIL
No. 025877
10/08/2021

PROJECT No: 500-897-LV-EF DRAWN BY: GAG/KAS/KMT
DESIGNED BY: ROM/GAG CHECKED BY: ALF/RPM/ROM
APPROVED BY

Kimley»Horn
6671 Las Vegas Boulevard South, Suite 320
Las Vegas, Nevada 89119
Tel. No.(702) 862-3600

SCALE
HORIZ: 1" = 40'
VERT: 1" = 4'
FIELD BOOK

DRAWING NO.
W-1
SHT. 6 OF 80
L-2304

LAS VEGAS BOULEVARD WATERLINE IMPROVEMENTS

This document without written authorization and adaptation by Kimley-Horn and Associates, Inc. shall be without liability to Kimley-Horn and Associates, Inc. Reuse of and improper reliance on this document without written authorization and adaptation by Kimley-Horn and Associates, Inc. is intended only for the specific purpose and client for which it was prepared. Reuse of and improper reliance on this document without written authorization and adaptation by Kimley-Horn and Associates, Inc. is the property of service, is intended only for the specific purpose and client for which it was prepared.
User: Gerardo.Gonzalez
Path:A:\TLC_Waterlineresources\Q4583\2020_Lasvegasblvd\CADD\LVB Phase E Water Plans\W1-W2.dwg

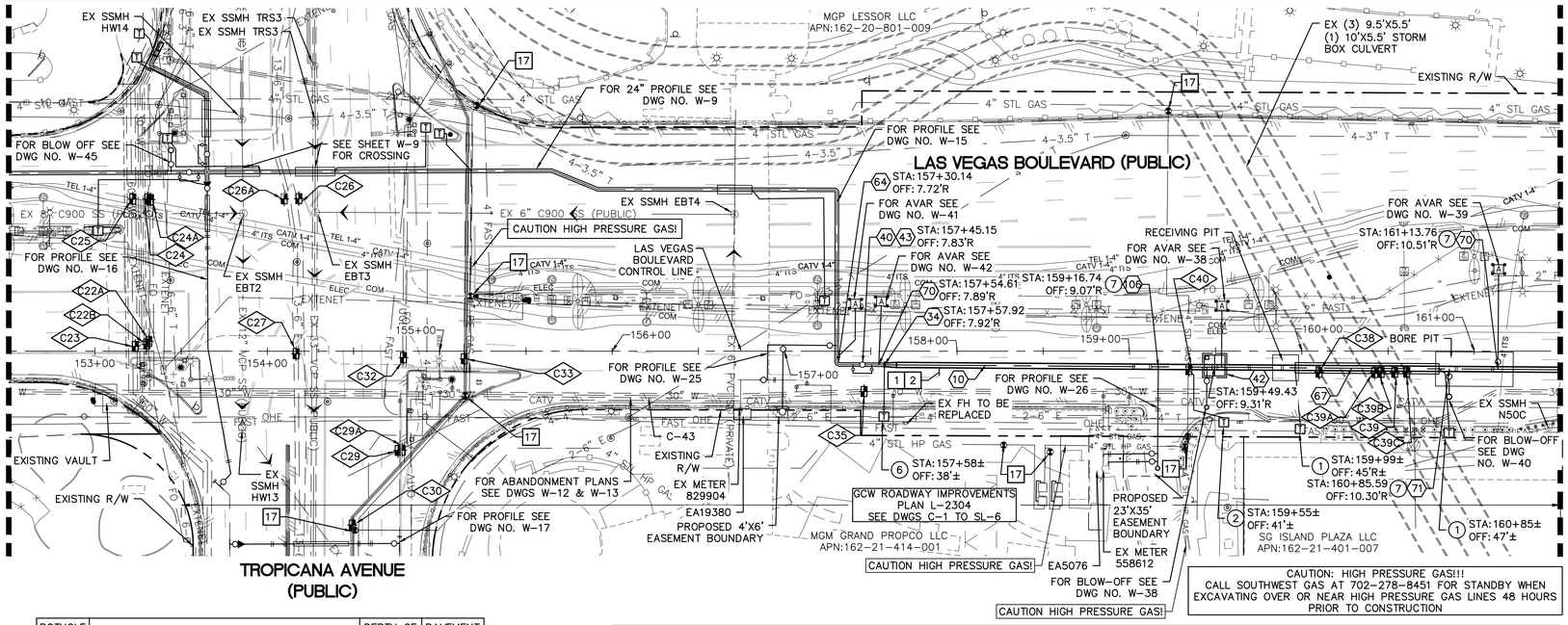

POTHOLE NO.	UTILITY, SIZE, AND MATERIAL LOCATED	DEPTH OF COVER	PAVEMENT THICKNESS
C22A	20" CONCRETE FIBER OPTIC	1.85'	6.5"
C22B	30" CONCRETE WATER	9.92'	6"
C23	60" CONCRETE WATER	7.17'	6"
C24	±74.5" CONCRETE WATER	10.96'	7"
C24A	16" CONCRETE ENCASED FIBER OPTIC	2.24'	7.5"
C25	60" CONCRETE WATER	9.44'	7"
C26	8.6" CONCRETE ELECTRIC	4.50'	10"
C26A	8.6" CONCRETE ELECTRIC	4.50'	10"
C27	93" CONCRETE ELECTRIC	6.41'	14"
C29	10" PLASTIC WATER	5.08'	8"
C29A	4" PLASTIC UNKNOWN	2.11'	8.5"
C30	16" METAL GAS	5.23'	9"
C32	(1)3" & (1)2" PLASTIC ELECTRIC	1.94'	7.5"
C33	16" METAL GAS	6.97'	7"
C35	30" CONCRETE WATER	2.60'	6"
C38	50' CONCRETE STORM CULVERT	5.21'	4"
C39	50' CONCRETE STORM CULVERT	4.81'	6"
C39A	UNKNOWN CONCRETE STORM	4.80'	6"
C39B	UNKNOWN CONCRETE STORM	4.82'	7"
C39C	UNKNOWN CONCRETE STORM	4.91'	7"
C40	4" METAL GAS	4.68'	6"

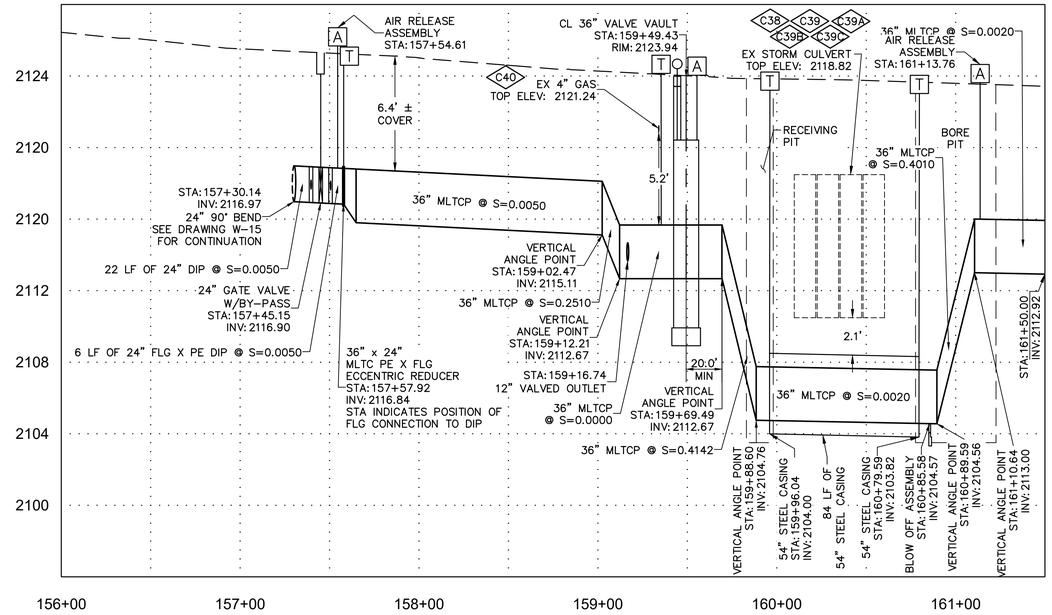

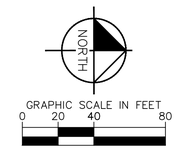

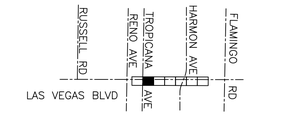

KEY MAP
NTS

CONSTRUCTION INDEX

- (10) INSTALL 36" MLTC PIPE, WELD ALL JOINTS, STA 147+25 THROUGH STA 181+35
- (34) INSTALL 36" X 24" MLTC REDUCER, WELDED FLANGE WITH FLANGE INSULATING KIT
- (40) INSTALL 24" GATE VALVE PER DETAILS 2 & 3 ON DWGS WD-10 & WD-11
- (42) INSTALL 36" BUTTERFLY VALVE AND VAULT PER DETAILS ON DWGS WD-2 THROUGH WD-6
- (43) INSTALL 6" DIP BYPASS ASSEMBLY W/ 6" GATE VALVES, RESTRAIN JOINTS (NOT THRUST BLOCKED), PER DETAIL 2 ON DWG WD-10 & DETAIL 2 & 3 DWG WD-11
- (64) INSTALL 24" X 90° BEND, RESTRAIN JOINTS
- (67) INSTALL PIPE CASING PER DETAIL 1 ON DWG WD-10
- (70) INSTALL AIR RELEASE VALVE ASSEMBLY PER DETAIL 1 ON DWG WD-9
- (71) INSTALL BLOW-OFF ASSEMBLY PER DETAIL 2 ON DWG WD-9
- (106) INSTALL 12" VALVED OUTLET PER DETAILS 2 & 3 ON DWG WD-10 & DETAIL 2 ON DWG WD-11

CONSTRUCTION NOTES

1. ALL TRENCH PER DETAILS ON DWG WD-1
2. SAWCUT AND/OR MATCH EXISTING GRADE. CONTRACTOR TO COORDINATE W/ CLARK COUNTY INSPECTOR FOR SAWCUT LOCATIONS
17. ONLY SWG CREWS CAN ADJUST SWG VALVES. SEE SWG NOTE 3 ON WG-4

CATHODIC PROTECTION

1. INSTALL TYPE C (CASING) TEST STATION PER DETAIL 1 ON DWG WD-21
2. INSTALL TYPE F (FOREGIN) TEST STATION PER DETAIL 2 ON DWG WD-20
6. INSTALL TYPE T (TYPICAL) TEST STATION PER DETAIL 2 ON DWG WD-21
7. INSTALL FLANGE INSULATING KIT PER DETAIL 1 ON DWG WD-22

FIRE DEPARTMENT APPROVAL

BY: _____ DATE: _____

APPROVAL OF THESE PLANS SHALL NOT BE CONSTRUED TO BE A PERMIT FOR, OR AN APPROVAL OF ANY VIOLATION OF ANY OF THE PROVISIONS OF STATE OR COUNTY LAWS.

APPROVAL OF THE FIRE DEPARTMENT HAVING JURISDICTION IS REQUIRED PRIOR TO OBTAINING FINAL APPROVAL FROM THE LAS VEGAS VALLEY WATER DISTRICT.

CCWRD APPROVAL

CLARK COUNTY WATER RECLAMATION DISTRICT DATE

CCWRD PIPES NUMBER IS 21,955.
SIGNATURE ON THESE PLANS SHALL NOT BE CONSTRUED TO BE A PERMIT FOR OR THE APPROVAL OF ANY VIOLATION OF CLARK COUNTY WATER RECLAMATION DISTRICT RULES, REGULATIONS, OR DESIGN AND CONSTRUCTION STANDARDS.

LVVWD APPROVAL

APPROVED FOR CONSTRUCTION

LAS VEGAS VALLEY WATER DISTRICT PLANNING AND ENGINEERING SERVICES

PROJECT No. 139055 FIRST APPROVED DATE _____

811 know what's below Call before you dig

SAFETY ALERT Call Before You Overhead 1-702-227-2929

UNION PACIFIC RAILROAD Call Before You Dig 1-800-336-9193

Call before you UnderGround 1-702-432-5300

NO.	REVISIONS	DATE
		APPROVED

CLARK COUNTY NEVADA

LAS VEGAS BLVD WATERLINE REPLACEMENT - TROPICANA AVE TO FLAMINGO RD (PHASE E/F)

36" WATER MAIN - PLAN AND PROFILE STA 152+50 TO STA 161+50

CLARK COUNTY, NEVADA, DEPARTMENT OF PUBLIC WORKS

PROFESSIONAL ENGINEER - STATE OF NEVADA
RAY P. MONTOYA
Exp. 12/31/2021
CIVIL
No. 025877
10/08/2021

PROJECT No: 500-897-LV-EF DRAWN BY: GAG/KAS/KMT
DESIGNED BY: ROM/GAG CHECKED BY: ALF/RPM/ROM
APPROVED BY

Kimley»Horn
6671 Las Vegas Boulevard South, Suite 320
Las Vegas, Nevada 89119
Tel. No.(702) 862-3600

SCALE
HORIZ: 1" = 40'
VERT: 1" = 4'
FIELD BOOK

DRAWING NO. W-2
SHT. 7 OF 80
L-2304

LAS VEGAS BOULEVARD WATERLINE IMPROVEMENTS

This document without written authorization and adaptation by Kimley-Horn and Associates, Inc. shall be without liability to Kimley-Horn and Associates, Inc. Reuse of and improper reliance on this document is intended only for the specific purpose and client for which it was prepared. Reuse of and improper reliance on this document without written authorization and adaptation by Kimley-Horn and Associates, Inc. shall be without liability to Kimley-Horn and Associates, Inc.

User: Gerardo.Gonzalez
Path: K:\TUC_WaterResources\069530001_LasVegasBlvd\CADD\LVB Phase E Water Plans\W1-W2.dwg

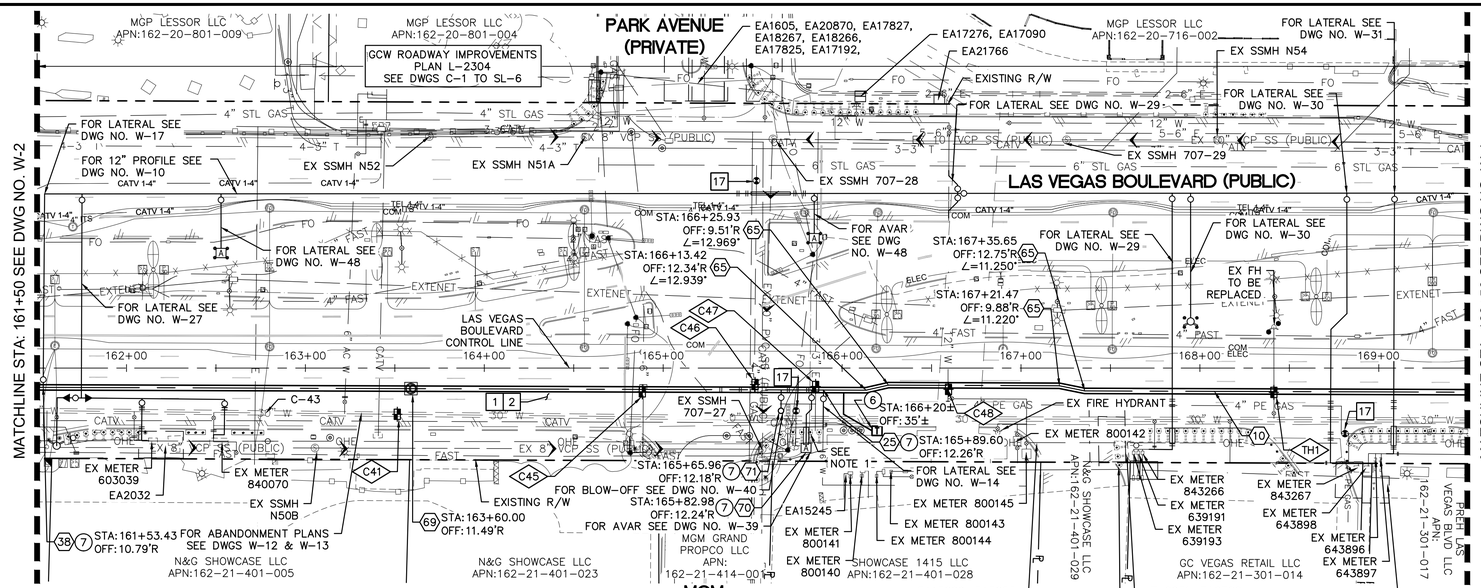

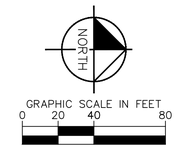

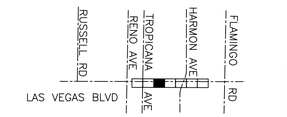

KEY MAP
NTS

LAS VEGAS BOULEVARD WATERLINE IMPROVEMENTS

CONSTRUCTION INDEX

- (10) INSTALL 36" MLTC PIPE, WELD ALL JOINTS, STA 147+25 THROUGH STA 181+35
- (25) INSTALL 6" VALVED OUTLET PER DETAILS 2 & 3 ON DWG WD-10 & DETAIL 2 ON DWG WD-11
- (38) INSTALL 12" GATE VALVE PER DETAIL 2 ON DWG WD-11 & UDACS PLT NO. 39 ON DWG WD-17
- (65) INSTALL 36" MLTC PIPE HORIZONTAL ANGLE POINT
- (69) INSTALL PIPE ACCESS MANHOLE PER DETAILS 3 & 4 ON DWG WD-8
- (70) INSTALL AIR RELEASE VALVE ASSEMBLY PER DETAIL 1 ON DWG WD-9
- (71) INSTALL BLOW-OFF ASSEMBLY PER DETAIL 2 ON DWG WD-9

CONSTRUCTION NOTES

- [1] ALL TRENCH PER DETAILS ON DWG WD-1
- [2] SAWCUT AND/OR MATCH EXISTING GRADE. CONTRACTOR TO COORDINATE W/ CLARK COUNTY INSPECTOR FOR SAWCUT LOCATIONS
- [17] ONLY SWG CREWS CAN ADJUST SWG VALVES. SEE SWG NOTE 3 ON WG-4
- [48] EXISTING SEWER MUST BE PROTECTED IN PLACE PER DCSWCS

CATHODIC PROTECTION

- (6) INSTALL TYPE T (TYPICAL) TEST STATION PER DETAIL 2 ON DWG WD-21
- (7) INSTALL FLANGE INSULATING KIT PER DETAIL 1 ON DWG WD-22

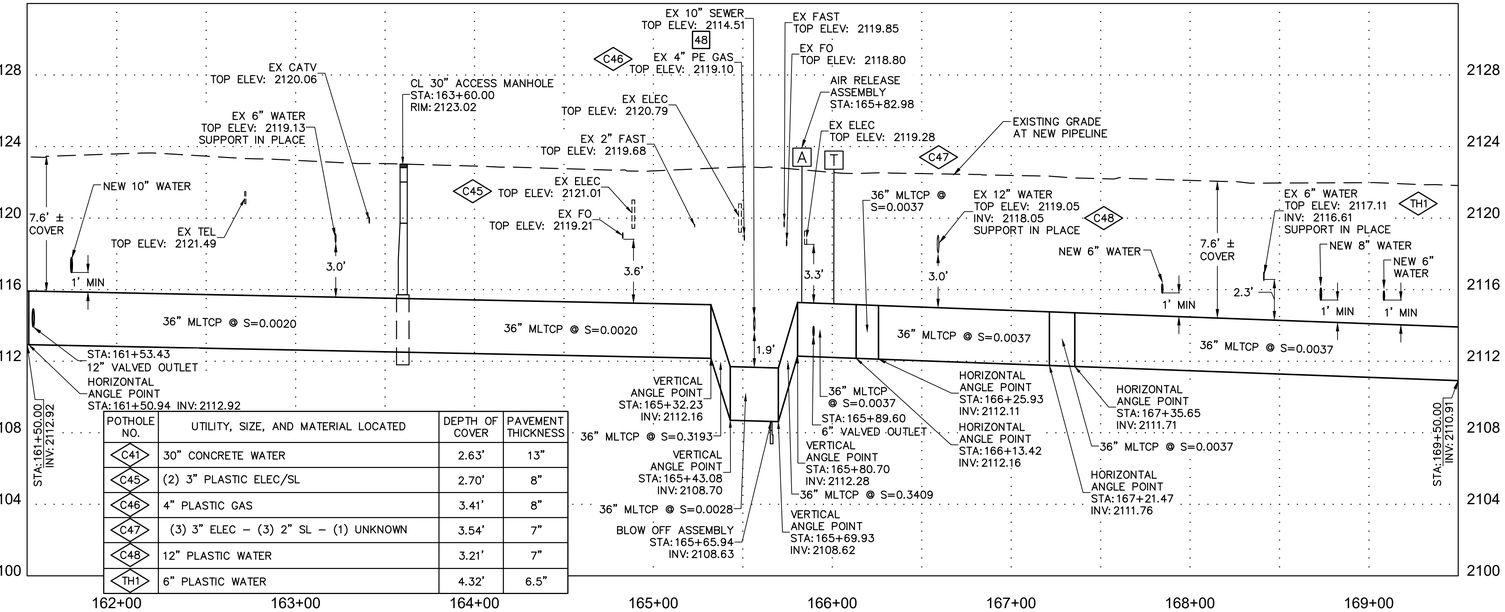

POTHOLE NO.	UTILITY, SIZE, AND MATERIAL LOCATED	DEPTH OF COVER	PAVEMENT THICKNESS
C41	30" CONCRETE WATER	2.63'	13"
C45	(2) 3" PLASTIC ELEC/SL	2.70'	8"
C46	4" PLASTIC GAS	3.41'	8"
C47	(3) 3" ELEC – (3) 2" SL – (1) UNKNOWN	3.54'	7"
C48	12" PLASTIC WATER	3.21'	7"
TH1	6" PLASTIC WATER	4.32'	6.5"

FIRE DEPARTMENT APPROVAL

BY: _____ DATE: _____

APPROVAL OF THESE PLANS SHALL NOT BE CONSTRUED TO BE A PERMIT FOR, OR AN APPROVAL OF ANY VIOLATION OF ANY OF THE PROVISIONS OF STATE OR COUNTY LAWS.

APPROVAL OF THE FIRE DEPARTMENT HAVING JURISDICTION IS REQUIRED PRIOR TO OBTAINING FINAL APPROVAL FROM THE LAS VEGAS VALLEY WATER DISTRICT.

CCWRD APPROVAL

CLARK COUNTY WATER RECLAMATION DISTRICT DATE

CCWRD PIPES NUMBER IS 21955
SIGNATURE ON THESE PLANS SHALL NOT BE CONSTRUED TO BE A PERMIT FOR OR THE APPROVAL OF ANY VIOLATION OF CLARK COUNTY WATER RECLAMATION DISTRICT RULES, REGULATIONS, OR DESIGN AND CONSTRUCTION STANDARDS.

LVVWD APPROVAL

APPROVED FOR CONSTRUCTION

LAS VEGAS VALLEY WATER DISTRICT PLANNING AND ENGINEERING SERVICES

PROJECT No. 139055 FIRST APPROVED DATE _____

811 know what's below Call before you dig

SAFETY ALERT Call Before You Overhead 1-702-227-2929

UNION PACIFIC RAILROAD Call Before You Dig 1-800-336-9193

Call before you UnderGround 1-702-432-5300

NO.	REVISIONS	DATE
		APPROVED

LAS VEGAS BLVD WATERLINE REPLACEMENT - TROPICANA AVE TO FLAMINGO RD (PHASE E/F)

36" WATER MAIN - PLAN AND PROFILE STA 161+50 TO STA 169+50

CLARK COUNTY, NEVADA, DEPARTMENT OF PUBLIC WORKS

PROFESSIONAL ENGINEER - STATE OF NEVADA
RAY P. MONTOYA
Exp. 12/31/2021
CIVIL
No. 025877
10/08/2021

PROJECT No: 500-897-LV-EF
DRAWN BY: GAG/KAS/KMT
DESIGNED BY: ROM/GAG
CHECKED BY: ALF/RPM/ROM
APPROVED BY

Kimley»Horn
6671 Las Vegas Boulevard South, Suite 320
Las Vegas, Nevada 89119
Tel. No.(702) 862-3600

SCALE
HORIZ: 1" = 40'
VERT: 1" = 4'
FIELD BOOK

DRAWING NO.
W-3
SHT. 8 OF 80
L-2304

This document without written authorization and adaptation by Kimley-Horn and Associates, Inc. shall be without liability to Kimley-Horn and Associates, Inc. Reuse of and improper reliance on this document without written authorization and adaptation by Kimley-Horn and Associates, Inc. shall be without liability to Kimley-Horn and Associates, Inc. Reuse of and improper reliance on this document without written authorization and adaptation by Kimley-Horn and Associates, Inc. shall be without liability to Kimley-Horn and Associates, Inc. This document is intended only for the specific purpose and client for which it was prepared. Reuse of and improper reliance on this document without written authorization and adaptation by Kimley-Horn and Associates, Inc. shall be without liability to Kimley-Horn and Associates, Inc.

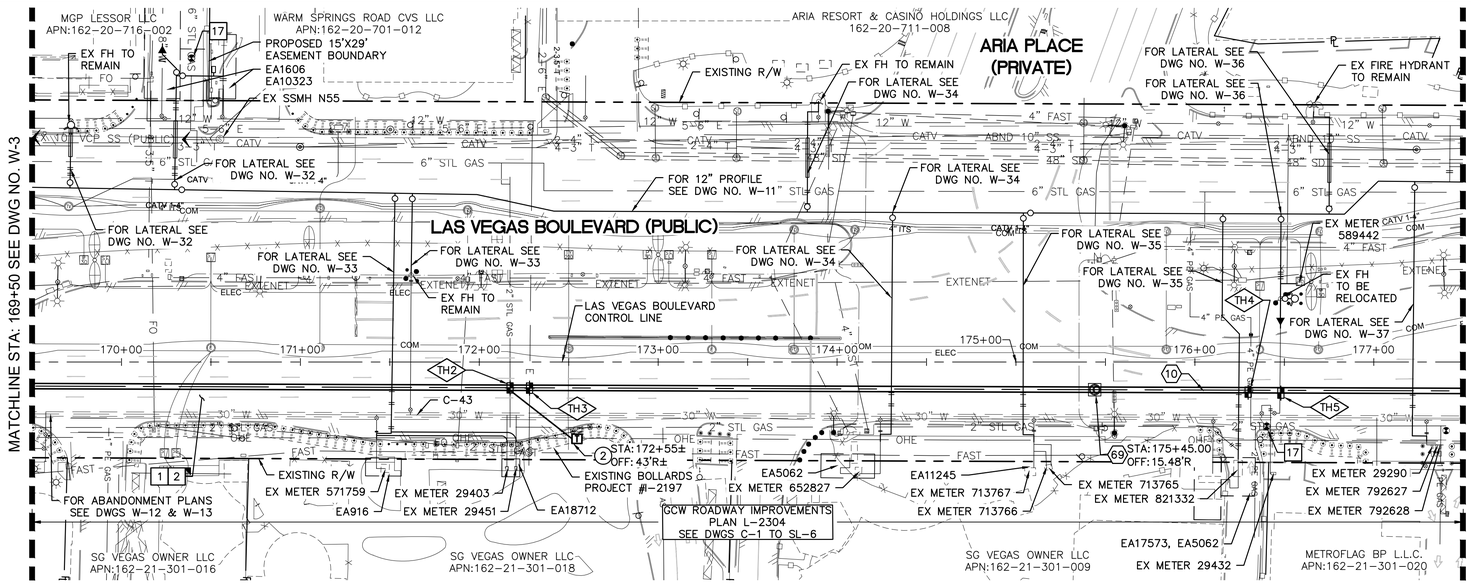

CAUTION: HIGH PRESSURE GAS!!!
CALL SOUTHWEST GAS AT 702-278-8451 FOR STANDBY WHEN EXCAVATING OVER OR NEAR HIGH PRESSURE GAS LINES 48 HOURS PRIOR TO CONSTRUCTION

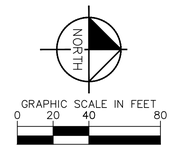

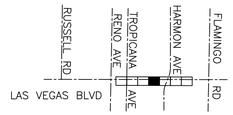

KEY MAP
NTS

CONSTRUCTION INDEX

(10) INSTALL 36" MLTC PIPE, WELD ALL JOINTS, STA 147+25 THROUGH STA 181+35

(69) INSTALL PIPE ACCESS MANHOLE PER DETAILS 3 & 4 ON DWG WD-8

CONSTRUCTION NOTES

1. ALL TRENCH PER DETAILS ON DWG WD-1
2. SAWCUT AND/OR MATCH EXISTING GRADE. CONTRACTOR TO COORDINATE W/ CLARK COUNTY INSPECTOR FOR SAWCUT LOCATIONS
17. ONLY SWG CREWS CAN ADJUST SWG VALVES. SEE SWG NOTE 3 ON WG-4

CATHODIC PROTECTION

(2) INSTALL TYPE F (FOREGIN) TEST STATION PER DETAIL 2 ON DWG WD-20

LAS VEGAS BOULEVARD WATERLINE IMPROVEMENTS

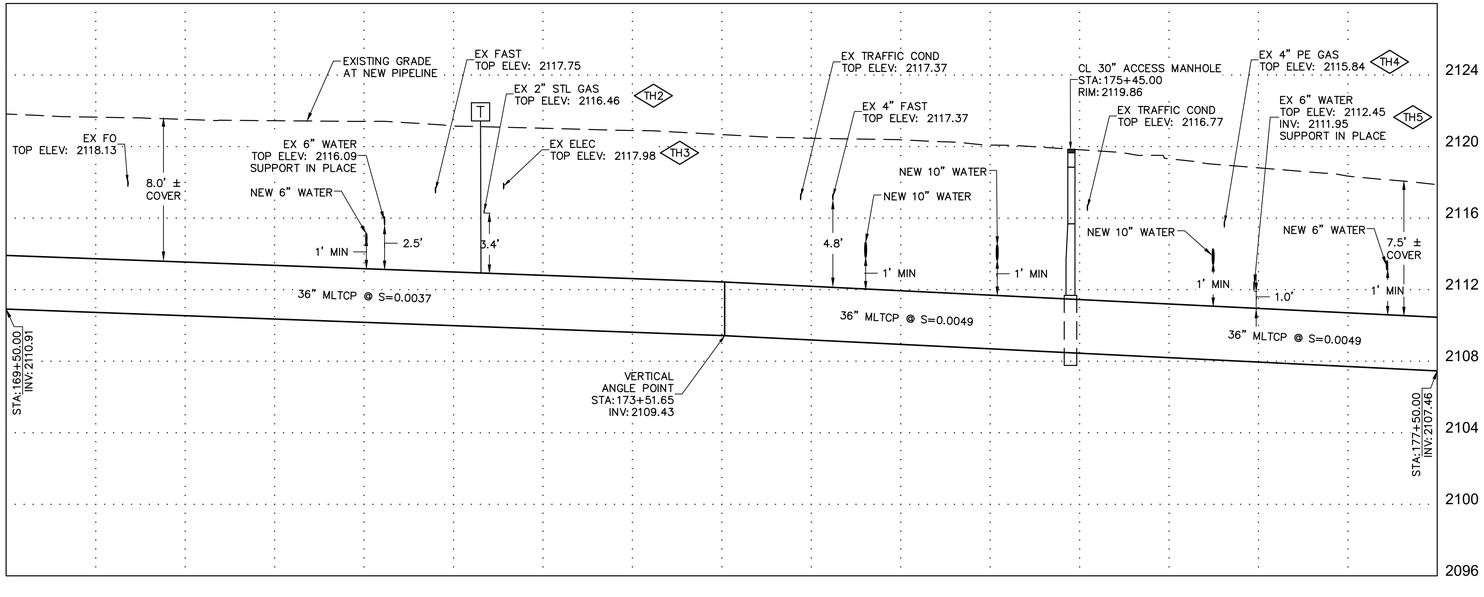

POTHOLE NO.	UTILITY, SIZE, AND MATERIAL LOCATED	DEPTH OF COVER	PAVEMENT THICKNESS
TH2	2" METAL GAS	4.18'	5"
TH3	3" PLASTIC ELEC	2.64'	7"
TH4	4" PLASTIC GAS	2.74'	6"
TH5	6" PLASTIC WATER	5.89'	6"

FIRE DEPARTMENT APPROVAL

BY: _____ DATE: _____

APPROVAL OF THESE PLANS SHALL NOT BE CONSTRUED TO BE A PERMIT FOR, OR AN APPROVAL OF ANY VIOLATION OF ANY OF THE PROVISIONS OF STATE OR COUNTY LAWS.

APPROVAL OF THE FIRE DEPARTMENT HAVING JURISDICTION IS REQUIRED PRIOR TO OBTAINING FINAL APPROVAL FROM THE LAS VEGAS VALLEY WATER DISTRICT.

CCWRD APPROVAL

CLARK COUNTY WATER RECLAMATION DISTRICT DATE

CCWRD PIPES NUMBER IS 21,955.
SIGNATURE ON THESE PLANS SHALL NOT BE CONSTRUED TO BE A PERMIT FOR OR THE APPROVAL OF ANY VIOLATION OF CLARK COUNTY WATER RECLAMATION DISTRICT RULES, REGULATIONS, OR DESIGN AND CONSTRUCTION STANDARDS.

LVVWD APPROVAL

APPROVED FOR CONSTRUCTION

LAS VEGAS VALLEY WATER DISTRICT PLANNING AND ENGINEERING SERVICES

PROJECT No. 139055 FIRST APPROVED DATE _____

811 know what's below Call before you dig

SAFETY ALERT Call Before You Overhead 1-702-227-2929

UNION PACIFIC RAILROAD Call Before You Dig 1-800-336-9193

Call before you UnderGround 1-702-432-5300

NO.	REVISIONS	DATE
		APPROVED

CLARK COUNTY NEVADA

LAS VEGAS BLVD WATERLINE REPLACEMENT - TROPICANA AVE TO FLAMINGO RD (PHASE E/F)

36" WATER MAIN - PLAN AND PROFILE STA 169+50 TO STA 177+50

CLARK COUNTY, NEVADA, DEPARTMENT OF PUBLIC WORKS

PROFESSIONAL ENGINEER - STATE OF NEVADA
RAY P. MONTOYA
Exp. 12/31/2021
CIVIL
No. 025877
10/08/2021

PROJECT No: 500-897-LV-EF DRAWN BY: GAG/KAS/KMT
DESIGNED BY: ROM/GAG CHECKED BY: ALF/RPM/ROM
APPROVED BY _____

Kimley»Horn
6671 Las Vegas Boulevard South, Suite 320
Las Vegas, Nevada 89119
Tel. No.(702) 862-3600

SCALE
HORIZ: 1" = 40'
VERT: 1" = 4'
FIELD BOOK

DRAWING NO.
W-4
SHT. 9 OF 80
L-2304

User: Gerardo.Gonzalez
Path:A:\TLC_Waterlineresources\Q4583\2000_Lasvegasblvd\CADD\WB Phase E Water Plans\WB-W5.dwg
This document, in any form, is the property of Kimley-Horn and Associates, Inc. It is intended only for the specific purpose and client for which it was prepared. Reuse of and improper reliance on this document without written authorization and adaptation by Kimley-Horn and Associates, Inc. shall be without liability to Kimley-Horn and Associates, Inc.

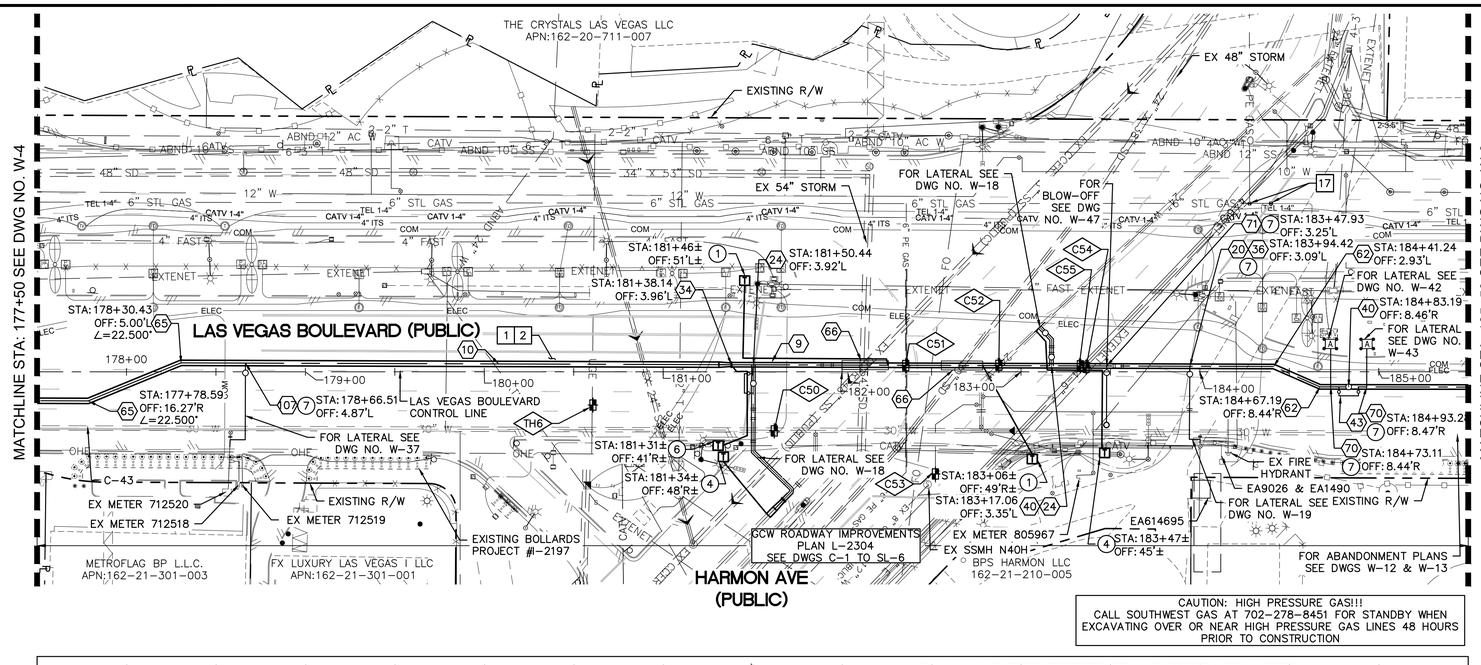

CAUTION: HIGH PRESSURE GAS!!!
CALL SOUTHWEST GAS AT 702-278-8451 FOR STANDBY WHEN EXCAVATING OVER OR NEAR HIGH PRESSURE GAS LINES 48 HOURS PRIOR TO CONSTRUCTION

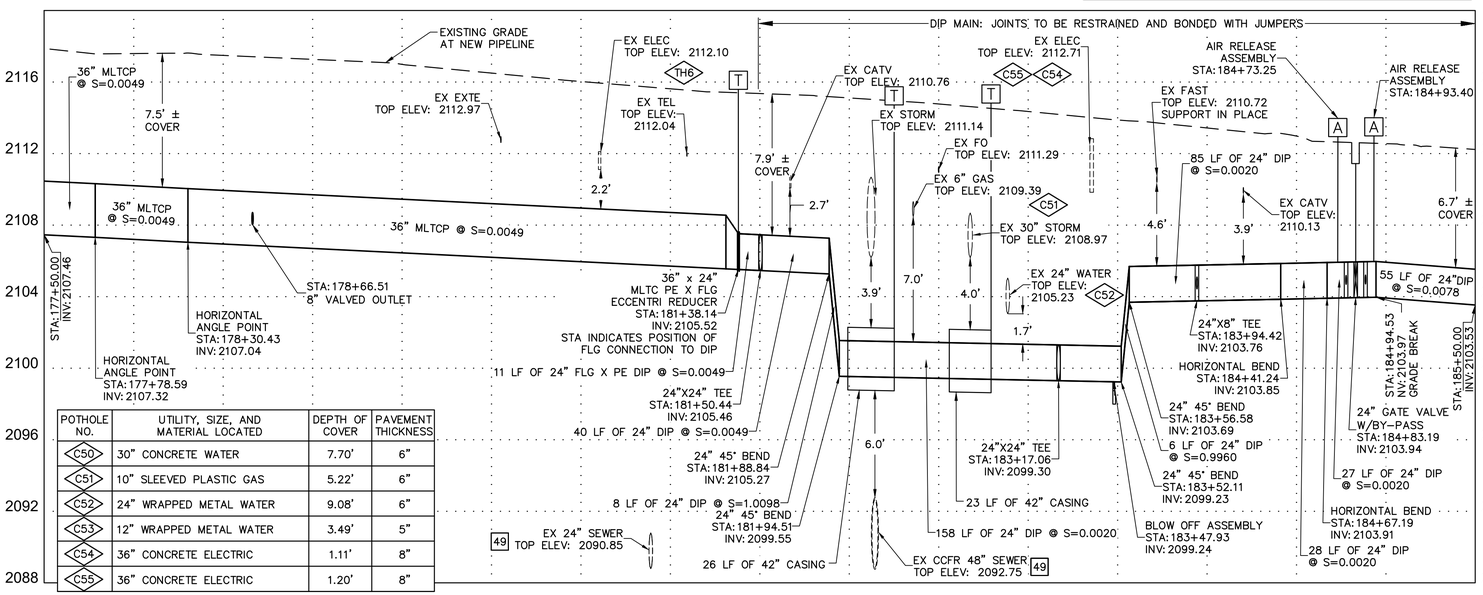

POTHOLE NO.	UTILITY, SIZE, AND MATERIAL LOCATED	DEPTH OF COVER	PAVEMENT THICKNESS
C50	30" CONCRETE WATER	7.70'	6"
C51	10" SLEEVED PLASTIC GAS	5.22'	6"
C52	24" WRAPPED METAL WATER	9.08'	6"
C53	12" WRAPPED METAL WATER	3.49'	5"
C54	36" CONCRETE ELECTRIC	1.11'	8"
C55	36" CONCRETE ELECTRIC	1.20'	8"

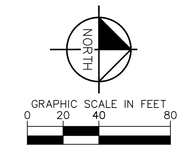

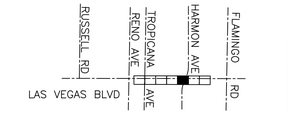

KEY MAP
NTS

CONSTRUCTION INDEX

- (9) INSTALL 24" DIP, RESTRAIN AND BOND ALL JOINTS
- (10) INSTALL 36" MLTC PIPE, WELD ALL JOINTS, STA 147+25 THROUGH STA 181+35
- (20) INSTALL 24" X 8" TEE, RESTRAIN JOINTS
- (24) INSTALL 24" X 24" TEE, RESTRAIN JOINTS
- (34) INSTALL 36" X 24" MLTC REDUCER, WELDED FLANGE WITH FLANGE INSULATING KIT
- (36) INSTALL 8" GATE VALVE PER DETAIL 2 ON DWG WD-11 & UDACS PLT NO. 39 ON DWG WD-17
- (40) INSTALL 24" GATE VALVE PER DETAILS 2 & 3 ON DWGS WD-10 & WD-11
- (43) INSTALL 6" DIP BYPASS ASSEMBLY W/ 6" GATE VALVES, RESTRAIN JOINTS (NOT THRUST BLOCKED), PER DETAIL 2 ON DWG WD-10 & DETAIL 2 & 3 DWG WD-11
- (62) INSTALL 24" X 22.5° BEND, RESTRAIN JOINTS
- (65) INSTALL 36" MLTC PIPE HORIZONTAL ANGLE POINT
- (66) INSTALL PIPE CASING PER UDACS PLATE NOS. 22 & 23 ON DWG WD-14
- (70) INSTALL AIR RELEASE VALVE ASSEMBLY PER DETAIL 1 ON DWG WD-9
- (71) INSTALL BLOW-OFF ASSEMBLY PER DETAIL 2 ON DWG WD-9
- (07) INSTALL 8" VALVED OUTLET PER DETAILS 2 & 3 ON DWG WD-10 & DETAIL 2 ON DWG WD-11

CONSTRUCTION NOTES

- [1] ALL TRENCH PER DETAILS ON DWG WD-1
- [2] SAWCUT AND/OR MATCH EXISTING GRADE. CONTRACTOR TO COORDINATE W/ CLARK COUNTY INSPECTOR FOR SAWCUT LOCATIONS
- [17] ONLY SWG CREWS CAN ADJUST SWG VALVES. SEE SWG NOTE 3 ON WG-4
- [49] EXISTING SEWER MUST BE PROTECTED IN PLACE PER DCSWCS

CATHODIC PROTECTION

- (1) INSTALL TYPE C (CASING) TEST STATION PER DETAIL 1 ON DWG WD-21
- (4) INSTALL TYPE I (INSULATED) TEST STATION PER DETAIL 3 ON DWG WD-20
- (6) INSTALL TYPE T (TYPICAL) TEST STATION PER DETAIL 2 ON DWG WD-21
- (7) INSTALL FLANGE INSULATING KIT PER DETAIL 1 ON DWG WD-22

FIRE DEPARTMENT APPROVAL

BY: _____ DATE: _____

APPROVAL OF THESE PLANS SHALL NOT BE CONSTRUED TO BE A PERMIT FOR, OR AN APPROVAL OF ANY VIOLATION OF ANY OF THE PROVISIONS OF STATE OR COUNTY LAWS.

APPROVAL OF THE FIRE DEPARTMENT HAVING JURISDICTION IS REQUIRED PRIOR TO OBTAINING FINAL APPROVAL FROM THE LAS VEGAS VALLEY WATER DISTRICT.

CCWRD APPROVAL

CLARK COUNTY WATER RECLAMATION DISTRICT DATE

CCWRD PIPES NUMBER IS 21,955.
SIGNATURE ON THESE PLANS SHALL NOT BE CONSTRUED TO BE A PERMIT FOR OR THE APPROVAL OF ANY VIOLATION OF CLARK COUNTY WATER RECLAMATION DISTRICT RULES, REGULATIONS, OR DESIGN AND CONSTRUCTION STANDARDS.

LVVWD APPROVAL

APPROVED FOR CONSTRUCTION

LAS VEGAS VALLEY WATER DISTRICT PLANNING AND ENGINEERING SERVICES

PROJECT No. 139055 FIRST APPROVED DATE _____

811 know what's below Call before you dig

SAFETY ALERT Call Before You Overhead 1-702-227-2929

UNION PACIFIC RAILROAD Call Before You Dig 1-800-336-9193

Call before you UnderGround 1-702-432-5300

LAS VEGAS BOULEVARD WATERLINE IMPROVEMENTS

NO.	REVISIONS	DATE
		APPROVED

CLARK COUNTY NEVADA

LAS VEGAS BLVD WATERLINE REPLACEMENT - TROPICANA AVE TO FLAMINGO RD (PHASE E/F)

36" & 24" WATER MAIN - PLAN AND PROFILE STA 177+50 TO STA 185+50

CLARK COUNTY, NEVADA, DEPARTMENT OF PUBLIC WORKS

PROFESSIONAL ENGINEER - STATE OF NEVADA
RAY P. MONTOYA
Exp. 12/31/2021
CIVIL
No. 025877
10/08/2021

PROJECT No: 500-897-LV-EF DRAWN BY: GAG/KAS/KMT
DESIGNED BY: ROM/GAG CHECKED BY: ALF/RPM/ROM
APPROVED BY

Kimley»Horn
6671 Las Vegas Boulevard South, Suite 320
Las Vegas, Nevada 89119
Tel. No.(702) 862-3600

SCALE
HORIZ: 1" = 40'
VERT: 1" = 4'
FIELD BOOK

DRAWING NO.
W-5
SHT. 10 OF 80
L-2304

User: Gerardo.Gonzalez
Paths:A:\,\\LC...\Waterlines\Las Vegas Blvd\CAD\WD Phase E Water Plans\W5-W6.dwg
This document, and the ideas and designs incorporated herein, as an instrument of service, is intended only for the specific purpose and client for which it was prepared. Reuse of and improper reliance on this document without written authorization and adaptation by Kimley-Horn and Associates, Inc. shall be without liability to Kimley-Horn and Associates, Inc.

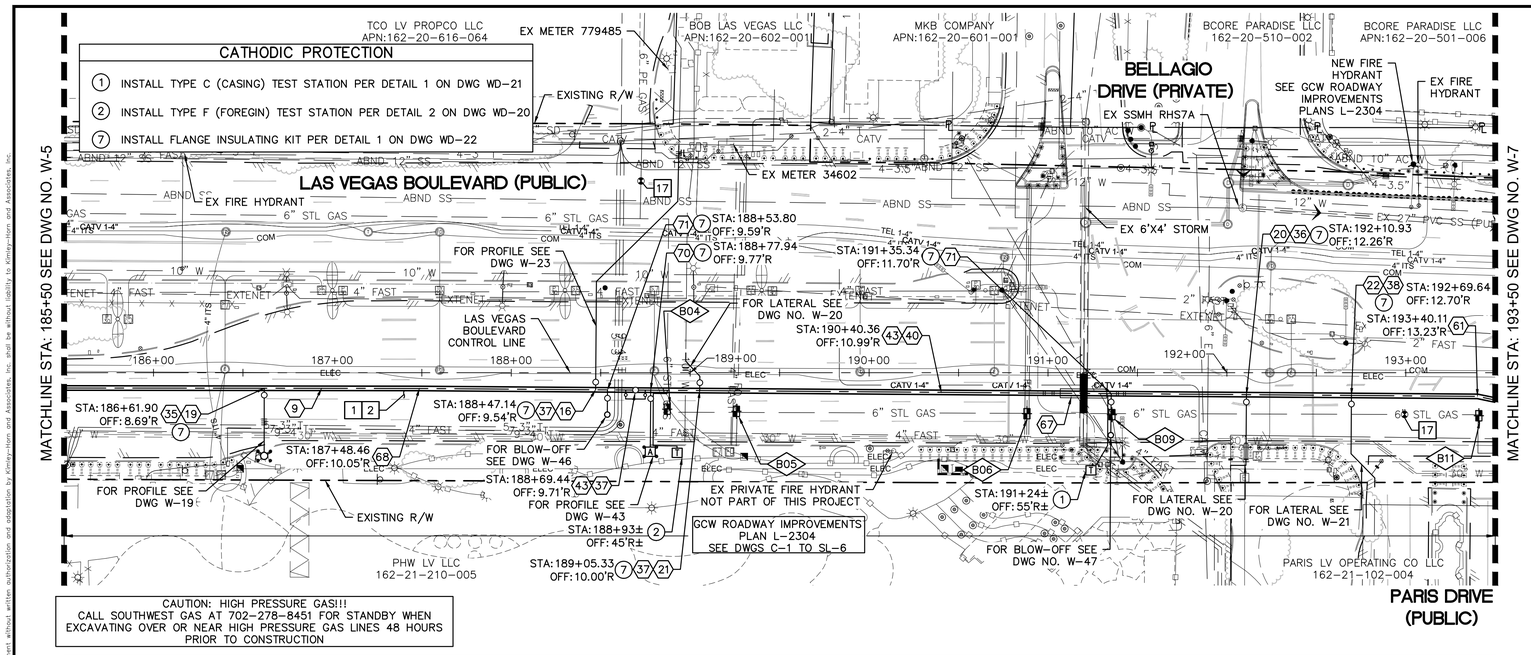

CAUTION: HIGH PRESSURE GAS!!!
CALL SOUTHWEST GAS AT 702-278-8451 FOR STANDBY WHEN EXCAVATING OVER OR NEAR HIGH PRESSURE GAS LINES 48 HOURS PRIOR TO CONSTRUCTION

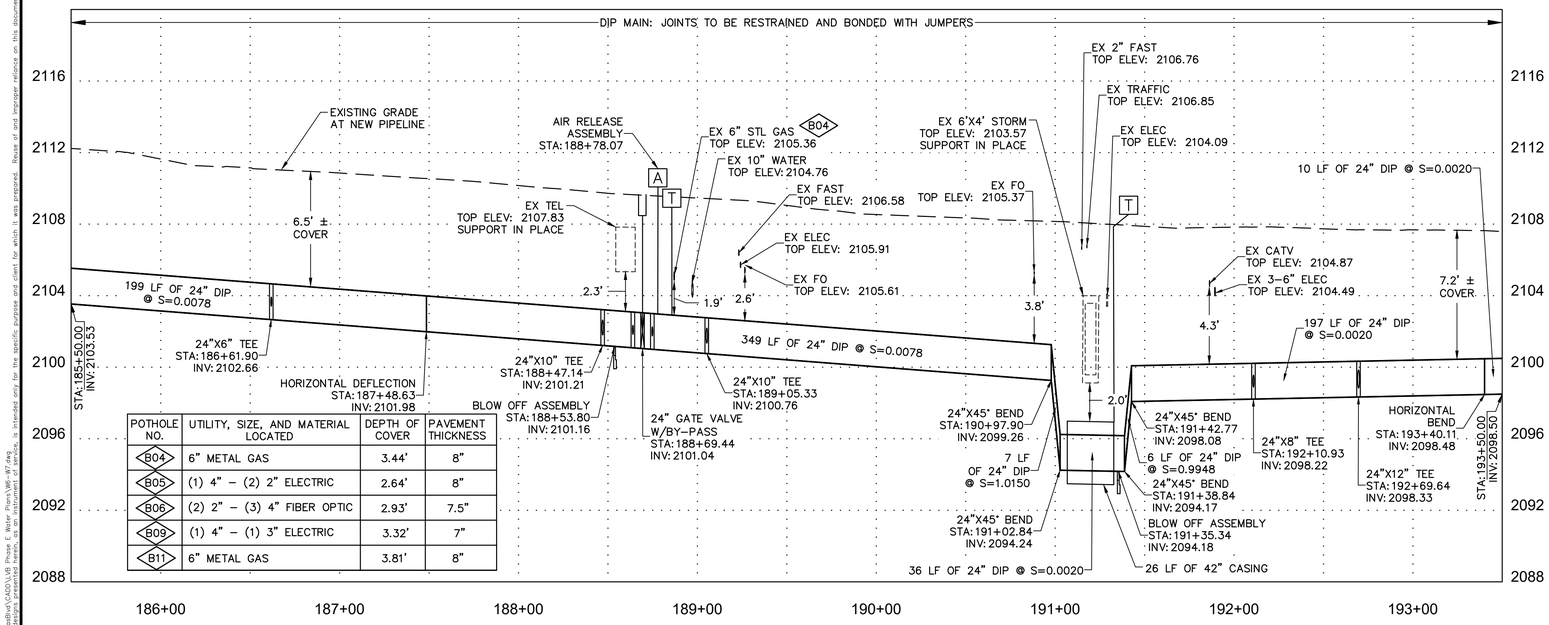

POTHOLE NO.	UTILITY, SIZE, AND MATERIAL LOCATED	DEPTH OF COVER	PAVEMENT THICKNESS
B04	6" METAL GAS	3.44'	8"
B05	(1) 4" – (2) 2" ELECTRIC	2.64'	8"
B06	(2) 2" – (3) 4" FIBER OPTIC	2.93'	7.5"
B09	(1) 4" – (1) 3" ELECTRIC	3.32'	7"
B11	6" METAL GAS	3.81'	8"

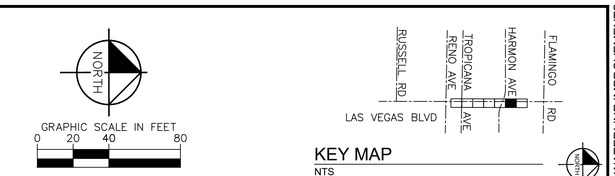

KEY MAP
NTS

LAS VEGAS BOULEVARD WATERLINE IMPROVEMENTS

CONSTRUCTION INDEX

- (9) INSTALL 24" DIP, RESTRAIN AND BOND ALL JOINTS
- (16) INSTALL 12" X 10" TEE, RESTRAIN JOINTS
- (19) INSTALL 24" X 6" TEE, RESTRAIN JOINTS
- (20) INSTALL 24" X 8" TEE, RESTRAIN JOINTS
- (21) INSTALL 24" X 10" TEE, RESTRAIN JOINTS
- (22) INSTALL 24" X 12" TEE, RESTRAIN JOINTS
- (35) INSTALL 6" GATE VALVE PER DETAIL 2 ON DWG WD-11 & UDACS PLT NO. 39 ON DWG WD-17
- (36) INSTALL 8" GATE VALVE PER DETAIL 2 ON DWG WD-11 & UDACS PLT NO. 39 ON DWG WD-17
- (37) INSTALL 10" GATE VALVE PER DETAIL 2 ON DWG WD-11 & UDACS PLT NO. 39 ON DWG WD-17
- (38) INSTALL 12" GATE VALVE PER DETAIL 2 ON DWG WD-11 & UDACS PLT NO. 39 ON DWG WD-17
- (40) INSTALL 24" GATE VALVE PER DETAILS 2 & 3 ON DWGS WD-10 & WD-11
- (43) INSTALL 6" DIP BYPASS ASSEMBLY W/ 6" GATE VALVES, RESTRAIN JOINTS (NOT THRUST BLOCKED), PER DETAIL 2 ON DWG WD-10 & DETAIL 2 & 3 DWG WD-11
- (61) INSTALL 24" X 11.25° MJ BEND, RESTRAIN JOINTS
- (67) INSTALL PIPE CASING PER DETAIL 1 ON DWG WD-10
- (68) HORIZONTAL DEFLECTION, RESTAIN JOINTS
- (70) INSTALL AIR RELEASE VALVE ASSEMBLY PER DETAIL 1 ON DWG WD-9
- (71) INSTALL BLOW-OFF ASSEMBLY PER DETAIL 2 ON DWG WD-9

CONSTRUCTION NOTES

1. ALL TRENCH PER DETAILS ON DWG WD-1
2. SAWCUT AND/OR MATCH EXISTING GRADE. CONTRACTOR TO COORDINATE W/ CLARK COUNTY INSPECTOR FOR SAWCUT LOCATIONS
17. ONLY SWG CREWS CAN ADJUST SWG VALVES. SEE SWG NOTE 3 ON WG-4

FIRE DEPARTMENT APPROVAL

BY: _____ DATE: _____

APPROVAL OF THESE PLANS SHALL NOT BE CONSTRUED TO BE A PERMIT FOR, OR AN APPROVAL OF ANY VIOLATION OF ANY OF THE PROVISIONS OF STATE OR COUNTY LAWS.

APPROVAL OF THE FIRE DEPARTMENT HAVING JURISDICTION IS REQUIRED PRIOR TO OBTAINING FINAL APPROVAL FROM THE LAS VEGAS VALLEY WATER DISTRICT.

CCWRD APPROVAL

CLARK COUNTY WATER RECLAMATION DISTRICT DATE

CCWRD PIPES NUMBER IS 21,955.
SIGNATURE ON THESE PLANS SHALL NOT BE CONSTRUED TO BE A PERMIT FOR OR THE APPROVAL OF ANY VIOLATION OF CLARK COUNTY WATER RECLAMATION DISTRICT RULES, REGULATIONS, OR DESIGN AND CONSTRUCTION STANDARDS.

LVVWD APPROVAL

APPROVED FOR CONSTRUCTION

LAS VEGAS VALLEY WATER DISTRICT PLANNING AND ENGINEERING SERVICES

PROJECT No. 139055 FIRST APPROVED DATE _____

811 know what's below Call before you dig

SAFETY ALERT Call Before You Overhead 1-702-227-2929

UNION PACIFIC RAILROAD Call Before You Dig 1-800-336-9193

Call before you Underground 1-702-432-5300

NO.	REVISIONS	DATE
		APPROVED

CLARK COUNTY NEVADA

LAS VEGAS BLVD WATERLINE REPLACEMENT - TROPICANA AVE TO FLAMINGO RD (PHASE E/F)

24" WATER MAIN - PLAN AND PROFESSIONAL ENGINEER - STATE OF NEVADA
RAY P. MONTOYA
Exp. 12/31/2021
CIVIL
No.025877
10/08/2021

CLARK COUNTY, NEVADA, DEPARTMENT OF PUBLIC WORKS

PROJECT No: 500-897-LV-EF DRAWN BY: GAG/KAS/KMT
DESIGNED BY: ROM/GAG CHECKED BY: ALF/RPM/ROM
APPROVED BY

Kimley»Horn
6671 Las Vegas Boulevard South, Suite 320
Las Vegas, Nevada 89119
Tel. No.(702) 862-3600

SCALE
HORIZ: 1" = 40'
VERT: 1" = 4'
FIELD BOOK

DRAWING NO.
W-6
SHT. 11 OF 80
L-2304

User: Gerardo.Gonzalez
Path: K:\Civil_Water\Resources\098513000_LasVegasBlvd\CADD\LVB Phase E Water Plans\WB-W7.dwg
This document is provided for the specific purpose and client for which it was prepared. Reuse of and improper reliance on this document without written authorization and adaptation by Kimley-Horn and Associates, Inc. shall be without liability to Kimley-Horn and Associates, Inc.

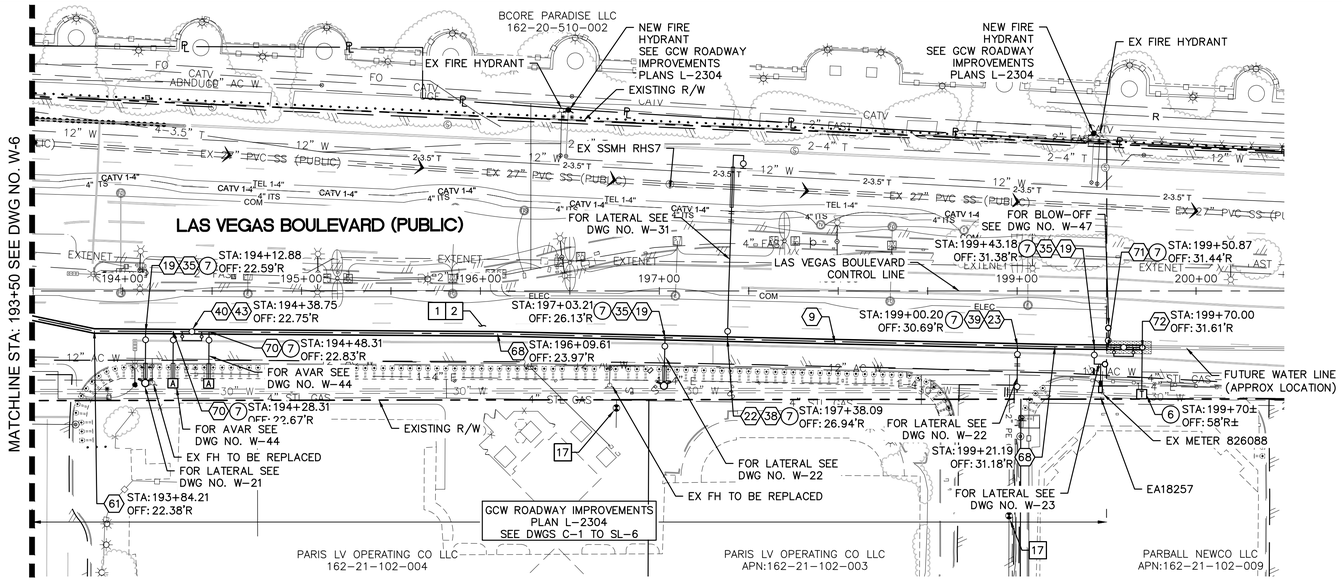

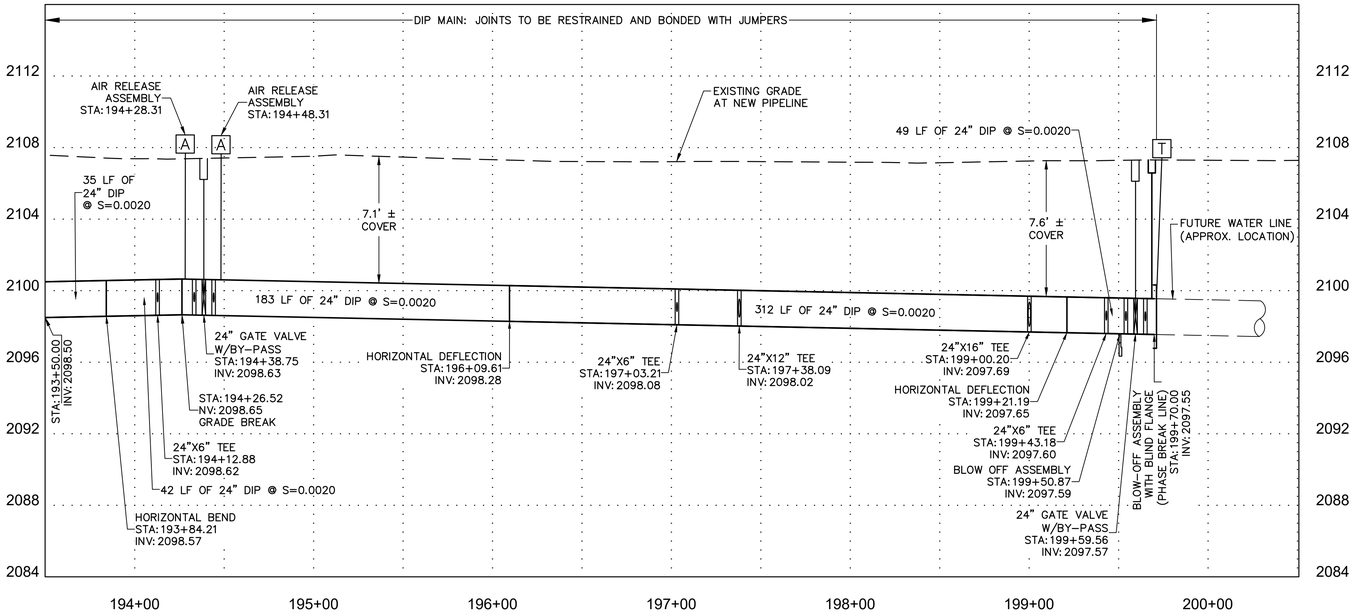

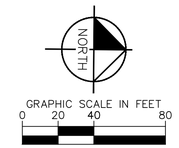

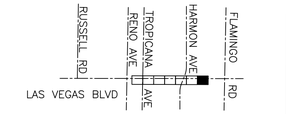

KEY MAP

NTS

CONSTRUCTION INDEX

- (9) INSTALL 24" DIP, RESTRAIN AND BOND ALL JOINTS
- (19) INSTALL 24" X 6" TEE, RESTRAIN JOINTS
- (22) INSTALL 24" X 12" TEE, RESTRAIN JOINTS
- (23) INSTALL 24" X 16" TEE, RESTRAIN JOINTS
- (35) INSTALL 6" GATE VALVE PER DETAIL 2 ON DWG WD-11 & UDACS PLT NO. 39 ON DWG WD-17
- (38) INSTALL 12" GATE VALVE PER DETAIL 2 ON DWG WD-11 & UDACS PLT NO. 39 ON DWG WD-17
- (39) INSTALL 16" GATE VALVE PER DETAIL 2 ON DWG WD-11 & UDACS PLT NO. 39 ON DWG WD-17
- (40) INSTALL 24" GATE VALVE PER DETAILS 2 & 3 ON DWGS WD-10 & WD-11
- (43) INSTALL 6" DIP BYPASS ASSEMBLY W/ 6" GATE VALVES, RESTRAIN JOINTS (NOT THRUST BLOCKED), PER DETAIL 2 ON DWG WD-10 & DETAIL 2 & 3 DWG WD-11
- (61) INSTALL 24" X 11.25° MJ BEND, RESTRAIN JOINTS
- (68) HORIZONTAL DEFLECTION, RESTAIN JOINTS
- (70) INSTALL AIR RELEASE VALVE ASSEMBLY PER DETAIL 1 ON DWG WD-9
- (71) INSTALL BLOW-OFF ASSEMBLY PER DETAIL 2 ON DWG WD-9
- (72) INSTALL 2" BLOW-OFF ASSEMBLY PER UDACS PLATE 36 ON DWG WD-16

CONSTRUCTION NOTES

- [1] ALL TRENCH PER DETAILS ON DWG WD-1
- [2] SAWCUT AND/OR MATCH EXISTING GRADE. CONTRACTOR TO COORDINATE W/ CLARK COUNTY INSPECTOR FOR SAWCUT LOCATIONS
- [17] ONLY SWG CREWS CAN ADJUST SWG VALVES. SEE SWG NOTE 3 ON WG-4

CATHODIC PROTECTION

- (6) INSTALL TYPE T (TYPICAL) TEST STATION PER DETAIL 2 ON DWG WD-21
- (7) INSTALL FLANGE INSULATING KIT PER DETAIL 1 ON DWG WD-22

FIRE DEPARTMENT APPROVAL

BY: _____ DATE: _____

APPROVAL OF THESE PLANS SHALL NOT BE CONSTRUED TO BE A PERMIT FOR, OR AN APPROVAL OF ANY VIOLATION OF ANY OF THE PROVISIONS OF STATE OR COUNTY LAWS.

APPROVAL OF THE FIRE DEPARTMENT HAVING JURISDICTION IS REQUIRED PRIOR TO OBTAINING FINAL APPROVAL FROM THE LAS VEGAS VALLEY WATER DISTRICT.

CCWRD APPROVAL

CLARK COUNTY WATER RECLAMATION DISTRICT DATE

CCWRD PIPES NUMBER IS 21,955.
SIGNATURE ON THESE PLANS SHALL NOT BE CONSTRUED TO BE A PERMIT FOR OR THE APPROVAL OF ANY VIOLATION OF CLARK COUNTY WATER RECLAMATION DISTRICT RULES, REGULATIONS, OR DESIGN AND CONSTRUCTION STANDARDS.

LVVWD APPROVAL

APPROVED FOR CONSTRUCTION

LAS VEGAS VALLEY WATER DISTRICT PLANNING AND ENGINEERING SERVICES

PROJECT No. 139055 FIRST APPROVED DATE _____

811 know what's below Call before you dig

SAFETY ALERT Call Before You Overhead 1-702-227-2929

UNION PACIFIC RAILROAD Call Before You Dig 1-800-336-9193

Call before you UnderGround 1-702-432-5300

NO.	REVISIONS	DATE
		APPROVED

CLARK COUNTY NEVADA

LAS VEGAS BLVD WATERLINE REPLACEMENT - TROPICANA AVE TO FLAMINGO RD (PHASE E/F)

24" WATER MAIN - PLAN AND PROFILE STA 193+50 TO STA 200+50

CLARK COUNTY, NEVADA, DEPARTMENT OF PUBLIC WORKS

PROFESSIONAL ENGINEER - STATE OF NEVADA
RAY P. MONTOYA
Exp. 12/31/2021
CIVIL
No. 025877
10/08/2021

PROJECT No: 500-897-LV-EF
DRAWN BY: GAG/KAS/KMT
DESIGNED BY: ROM/GAG
CHECKED BY: ALF/RPM/ROM
APPROVED BY

Kimley»Horn
6671 Las Vegas Boulevard South, Suite 320
Las Vegas, Nevada 89119
Tel. No.(702) 862-3600

SCALE
HORIZ: 1" = 40'
VERT: 1" = 4'
FIELD BOOK

DRAWING NO.
W-7
SHT. 12 OF 80
L-2304

LAS VEGAS BOULEVARD WATERLINE IMPROVEMENTS

User: Gerardo.Gonzalez
Path: K:\TUC_WaterResources\045830300_LasVegasBlvd\CADD\VB Phase E Water Plans\WB-W7.dwg
This document, in part or whole, is intended only for the specific purpose and client for which it was prepared. Reuse of and improper reliance on this document without written authorization and adaptation by Kimley-Horn and Associates, Inc. shall be without liability to Kimley-Horn and Associates, Inc.

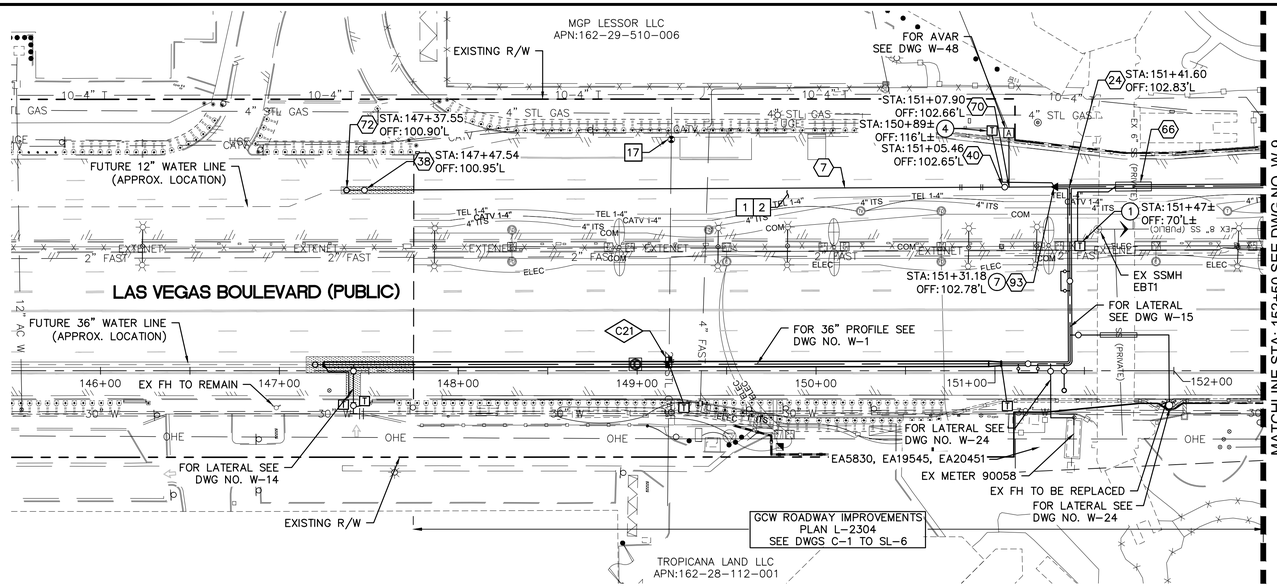

FOR EXISTING GAS LINES, EXACT DEPTH AND LOCATION UNKNOWN. CONTRACTOR TO LOCATE VERTICALLY AND HORIZONTALLY PRIOR TO ANY EXCAVATION OPERATIONS.

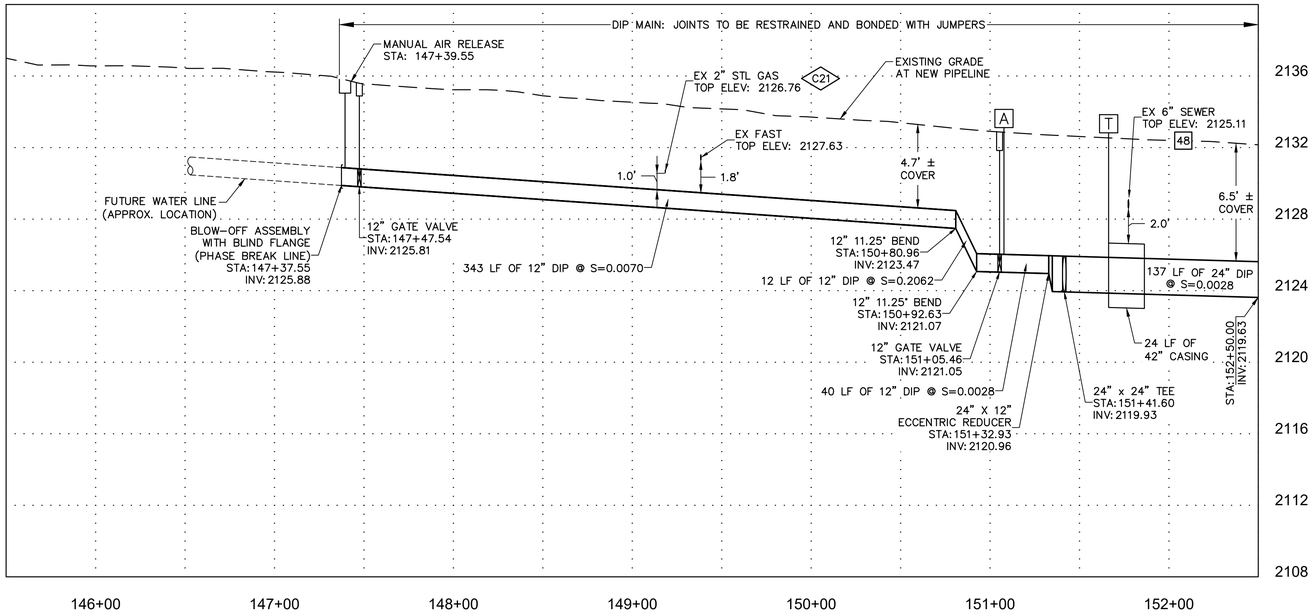

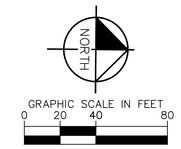

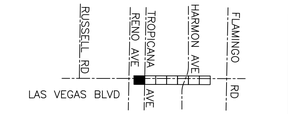

KEY MAP

NTS

CONSTRUCTION INDEX

- (7) INSTALL 12" DIP, RESTRAIN AND BOND ALL JOINTS
- (24) INSTALL 24" X 24" TEE, RESTRAIN JOINTS
- (38) INSTALL 12" GATE VALVE PER DETAIL 2 ON DWG WD-11 & UDACS PLT NO. 39 ON DWG WD-17
- (40) INSTALL 24" GATE VALVE PER DETAILS 2 & 3 ON DWGS WD-10 & WD-11
- (66) INSTALL PIPE CASING PER UDACS PLATE NOS. 22 & 23 ON DWG WD-14
- (70) INSTALL AIR RELEASE VALVE ASSEMBLY PER DETAIL 1 ON DWG WD-9
- (72) INSTALL 2" BLOW-OFF ASSEMBLY PER UDACS PLATE 36 ON DWG WD-16
- (93) INSTALL 24" X 12" REDUCER, RESTRAIN JOINTS

CONSTRUCTION NOTES

- [1] ALL TRENCH PER DETAILS ON DWG WD-1
- [2] SAWCUT AND/OR MATCH EXISTING GRADE. CONTRACTOR TO COORDINATE W/ CLARK COUNTY INSPECTOR FOR SAWCUT LOCATIONS
- [17] ONLY SWG CREWS CAN ADJUST SWG VALVES. SEE SWG NOTE 3 ON WG-4
- [48] EXISTING SEWER MUST BE PROTECTED IN PLACE PER DCSWCS

CATHODIC PROTECTION

- (1) INSTALL TYPE C (CASING) TEST STATION PER DETAIL 1 ON DWG WD-21
- (4) INSTALL TYPE I (INSULATED) TEST STATION PER DETAIL 3 ON DWG WD-20
- (7) INSTALL FLANGE INSULATING KIT PER DETAIL 1 ON DWG WD-22

POTHOLE NO.	UTILITY, SIZE, AND MATERIAL LOCATED	DEPTH OF COVER	PAVEMENT THICKNESS
C21	2" METAL GAS	3.85'	5.5"

FIRE DEPARTMENT APPROVAL

BY: _____ DATE: _____

APPROVAL OF THESE PLANS SHALL NOT BE CONSTRUED TO BE A PERMIT FOR, OR AN APPROVAL OF ANY VIOLATION OF ANY OF THE PROVISIONS OF STATE OR COUNTY LAWS.

APPROVAL OF THE FIRE DEPARTMENT HAVING JURISDICTION IS REQUIRED PRIOR TO OBTAINING FINAL APPROVAL FROM THE LAS VEGAS VALLEY WATER DISTRICT.

CCWRD APPROVAL

CLARK COUNTY WATER RECLAMATION DISTRICT DATE

CCWRD PIPES NUMBER IS 21,955.
SIGNATURE ON THESE PLANS SHALL NOT BE CONSTRUED TO BE A PERMIT FOR OR THE APPROVAL OF ANY VIOLATION OF CLARK COUNTY WATER RECLAMATION DISTRICT RULES, REGULATIONS, OR DESIGN AND CONSTRUCTION STANDARDS.

LVVWD APPROVAL

APPROVED FOR CONSTRUCTION

LAS VEGAS VALLEY WATER DISTRICT PLANNING AND ENGINEERING SERVICES

PROJECT No. 139055 FIRST APPROVED DATE _____

811 know what's below Call before you dig

SAFETY ALERT Call Before You Overhead 1-702-227-2929

UNION PACIFIC RAILROAD Call Before You Dig 1-800-336-9193

Call before you UnderGround 1-702-432-5300

NO.	REVISIONS	DATE
		APPROVED

CLARK COUNTY NEVADA

LAS VEGAS BLVD WATERLINE REPLACEMENT - TROPICANA AVE TO FLAMINGO RD (PHASE E/F)

12" & 24" WATER MAIN - PLAN AND PROFESSIONAL ENGINEER-STATE OF NEVADA

CLARK COUNTY, NEVADA, DEPARTMENT OF PUBLIC WORKS

RAY P. MONTOYA Exp. 12/31/2021 CIVIL No. 025877

10/08/2021

PROJECT No: 500-897-LV-EF DRAWN BY: GAG/KAS/KMT
DESIGNED BY: ROM/GAG CHECKED BY: ALF/RPM/ROM
APPROVED BY

Kimley»Horn
6671 Las Vegas Boulevard South, Suite 320
Las Vegas, Nevada 89119
Tel. No.(702) 862-3600

SCALE
HORIZ: 1" = 40'
VERT: 1" = 4'
FIELD BOOK

DRAWING NO.
W-8
SHT. 13 OF 80
L-2304

LAS VEGAS BOULEVARD WATERLINE IMPROVEMENTS

This document without written authorization and adaptation by Kimley-Horn and Associates, Inc. shall be without liability to Kimley-Horn and Associates, Inc. Reuse of and improper reliance on this document by others, or for purposes other than those for which it was prepared, Reuse of and improper reliance on this document without written authorization and adaptation by Kimley-Horn and Associates, Inc. shall be without liability to Kimley-Horn and Associates, Inc.

User: Gerardo.Gonzalez
Path: K:\TUC_Waterlines\ru\045330001_LasVegasBlvd\CADD\LVB Phase E Water Plans\17-18_WB-WD.dwg

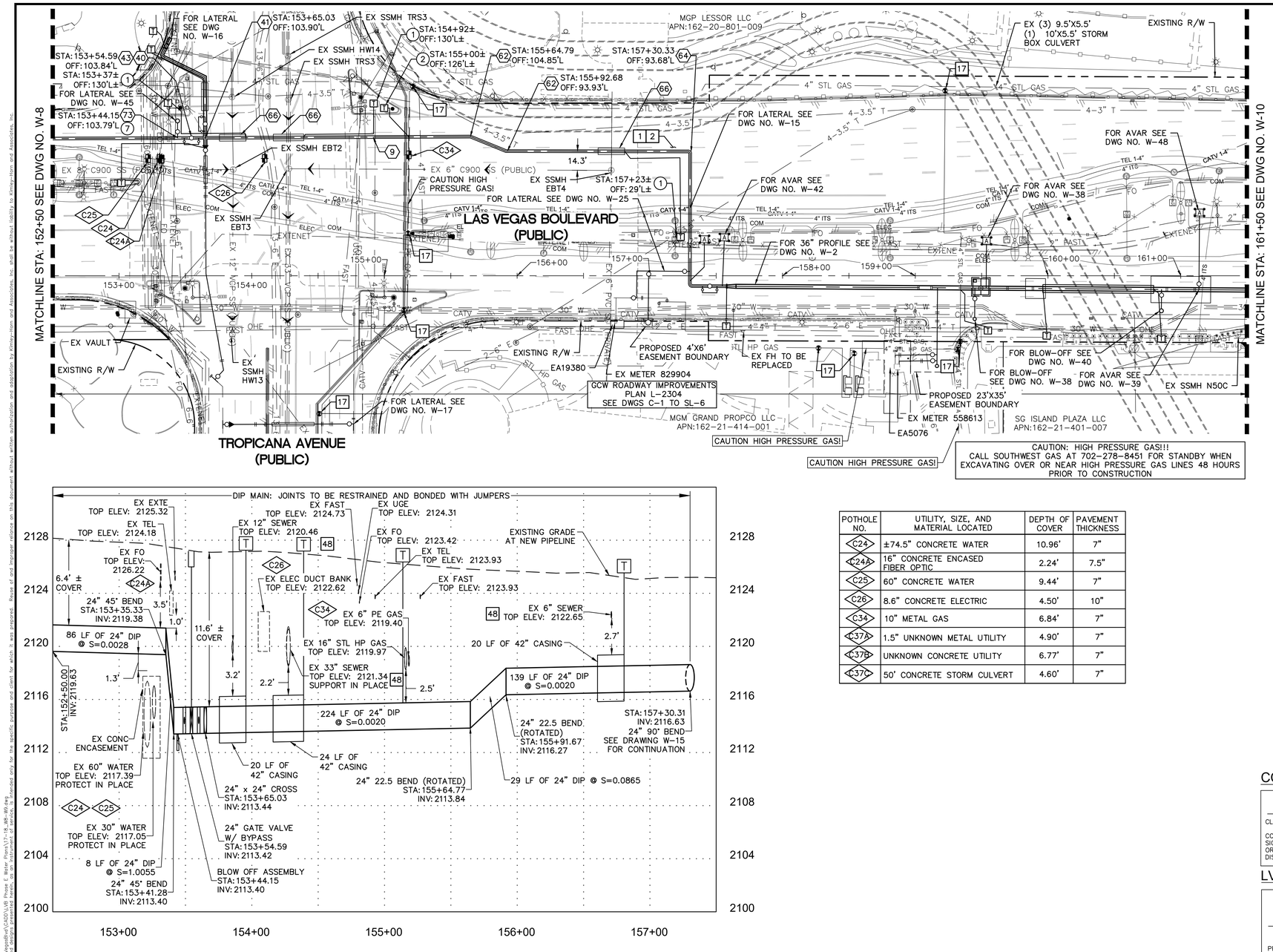

POTHOLE NO.	UTILITY, SIZE, AND MATERIAL LOCATED	DEPTH OF COVER	PAVEMENT THICKNESS
C24	±74.5" CONCRETE WATER	10.96'	7"
C24A	16" CONCRETE ENCASED FIBER OPTIC	2.24'	7.5"
C25	60" CONCRETE WATER	9.44'	7"
C26	8.6" CONCRETE ELECTRIC	4.50'	10"
C34	10" METAL GAS	6.84'	7"
C37A	1.5" UNKNOWN METAL UTILITY	4.90'	7"
C37B	UNKNOWN CONCRETE UTILITY	6.77'	7"
C37C	50' CONCRETE STORM CULVERT	4.60'	7"

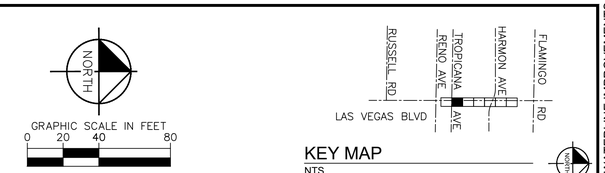

KEY MAP
NTS

CONSTRUCTION INDEX

- (9) INSTALL 24" DIP, RESTRAIN AND BOND ALL JOINTS
- (40) INSTALL 24" GATE VALVE PER DETAILS 2 & 3 ON DWGS WD-10 & WD-11
- (41) INSTALL 24" x 24" CROSS, RESTRAIN JOINTS
- (43) INSTALL 6" DIP BYPASS ASSEMBLY W/ 6" GATE VALVES, RESTRAIN JOINTS (NOT THRUST BLOCKED), PER DETAIL 2 ON DWG WD-10 & DETAIL 2 & 3 DWG WD-11
- (62) INSTALL 24" X 22.5° BEND, RESTRAIN JOINTS
- (64) INSTALL 24" X 90° BEND, RESTRAIN JOINTS
- (66) INSTALL PIPE CASING PER UDACS PLATE NOS. 22 & 23 ON DWG WD-14
- (73) INSTALL 6" BLOW-OFF ASSEMBLY PER UDACS PLATE 37 ON DWG WD-16

CONSTRUCTION NOTES

- [1] ALL TRENCH PER DETAILS ON DWG WD-1
- [2] SAWCUT AND/OR MATCH EXISTING GRADE. CONTRACTOR TO COORDINATE W/ CLARK COUNTY INSPECTOR FOR SAWCUT LOCATIONS
- [17] ONLY SWG CREWS CAN ADJUST SWG VALVES. SEE SWG NOTE 3 ON WG-4
- [48] EXISTING SEWER MUST BE PROTECTED IN PLACE PER DCSWCS

CATHODIC PROTECTION

- (1) INSTALL TYPE C (CASING) TEST STATION PER DETAIL 1 ON DWG WD-21
- (2) INSTALL TYPE F (FOREGIN) TEST STATION PER DETAIL 2 ON DWG WD-20
- (3) INSTALL TYPE I (INSULATED) TEST STATION PER DETAIL 1 ON DWG WD-20
- (4) INSTALL TYPE I (INSULATED) TEST STATION PER DETAIL 3 ON DWG WD-20
- (5) INSTALL TYPE C/F TEST STATION (CASING/FOREIGN) PER DETAIL 4 ON DWG WD-20
- (7) INSTALL FLANGE INSULATING KIT PER DETAIL 1 ON DWG WD-22

FIRE DEPARTMENT APPROVAL

BY: _____ DATE: _____

APPROVAL OF THESE PLANS SHALL NOT BE CONSTRUED TO BE A PERMIT FOR, OR AN APPROVAL OF ANY VIOLATION OF ANY OF THE PROVISIONS OF STATE OR COUNTY LAWS.

APPROVAL OF THE FIRE DEPARTMENT HAVING JURISDICTION IS REQUIRED PRIOR TO OBTAINING FINAL APPROVAL FROM THE LAS VEGAS VALLEY WATER DISTRICT.

CCWRD APPROVAL

CLARK COUNTY WATER RECLAMATION DISTRICT DATE

CCWRD PIPES NUMBER IS 21,955
SIGNATURE ON THESE PLANS SHALL NOT BE CONSTRUED TO BE A PERMIT FOR OR THE APPROVAL OF ANY VIOLATION OF CLARK COUNTY WATER RECLAMATION DISTRICT RULES, REGULATIONS, OR DESIGN AND CONSTRUCTION STANDARDS.

LVVWD APPROVAL

APPROVED FOR CONSTRUCTION

LAS VEGAS VALLEY WATER DISTRICT PLANNING AND ENGINEERING SERVICES

PROJECT No. 139055 FIRST APPROVED DATE _____

811 know what's below Call before you dig

SAFETY ALERT Call Before You Overhead 1-702-227-2929

UNION PACIFIC RAILROAD Call Before You Dig 1-800-336-9193

Call before you UnderGround 1-702-432-5300

NO.	REVISIONS	DATE
		APPROVED

CLARK COUNTY NEVADA

LAS VEGAS BLVD WATERLINE REPLACEMENT - TROPICANA AVE TO FLAMINGO RD (PHASE E/F)

24" & 12" WATER MAIN - PLAN AND PROFILE STA 152+50 TO STA 161+50

CLARK COUNTY, NEVADA, DEPARTMENT OF PUBLIC WORKS

PROFESSIONAL ENGINEER - STATE OF NEVADA
RAY P. MONTOYA
Exp. 12/31/2021
CIVIL
No. 025877
10/08/2021

PROJECT No: 500-897-LV-EF DRAWN BY: GAG/KAS/KMT
DESIGNED BY: ROM/GAG CHECKED BY: ALF/RPM/ROM
APPROVED BY _____

Kimley»Horn
6671 Las Vegas Boulevard South, Suite 320
Las Vegas, Nevada 89119 Tel. No.(702) 862-3600

SCALE
HORIZ: 1" = 40'
VERT: 1" = 4'
FIELD BOOK

DRAWING NO.
W-9
SHT. 14 OF 80
L-2304

LAS VEGAS BOULEVARD WATERLINE IMPROVEMENTS

This document without written authorization and adaptation by Kimley-Horn and Associates, Inc. shall be without liability to Kimley-Horn and Associates, Inc. Reuse of and improper reliance on this document without written authorization and adaptation by Kimley-Horn and Associates, Inc. shall be without liability to Kimley-Horn and Associates, Inc. Provided only for the specific purpose and client for which it was prepared.
User: Gerardo.Gonzalez
Path: K:\TUC_Waterresources\068313000_LasVegasBlvd\CADD\LVB Phase E Water Plans\17-19_WS-W9.dwg

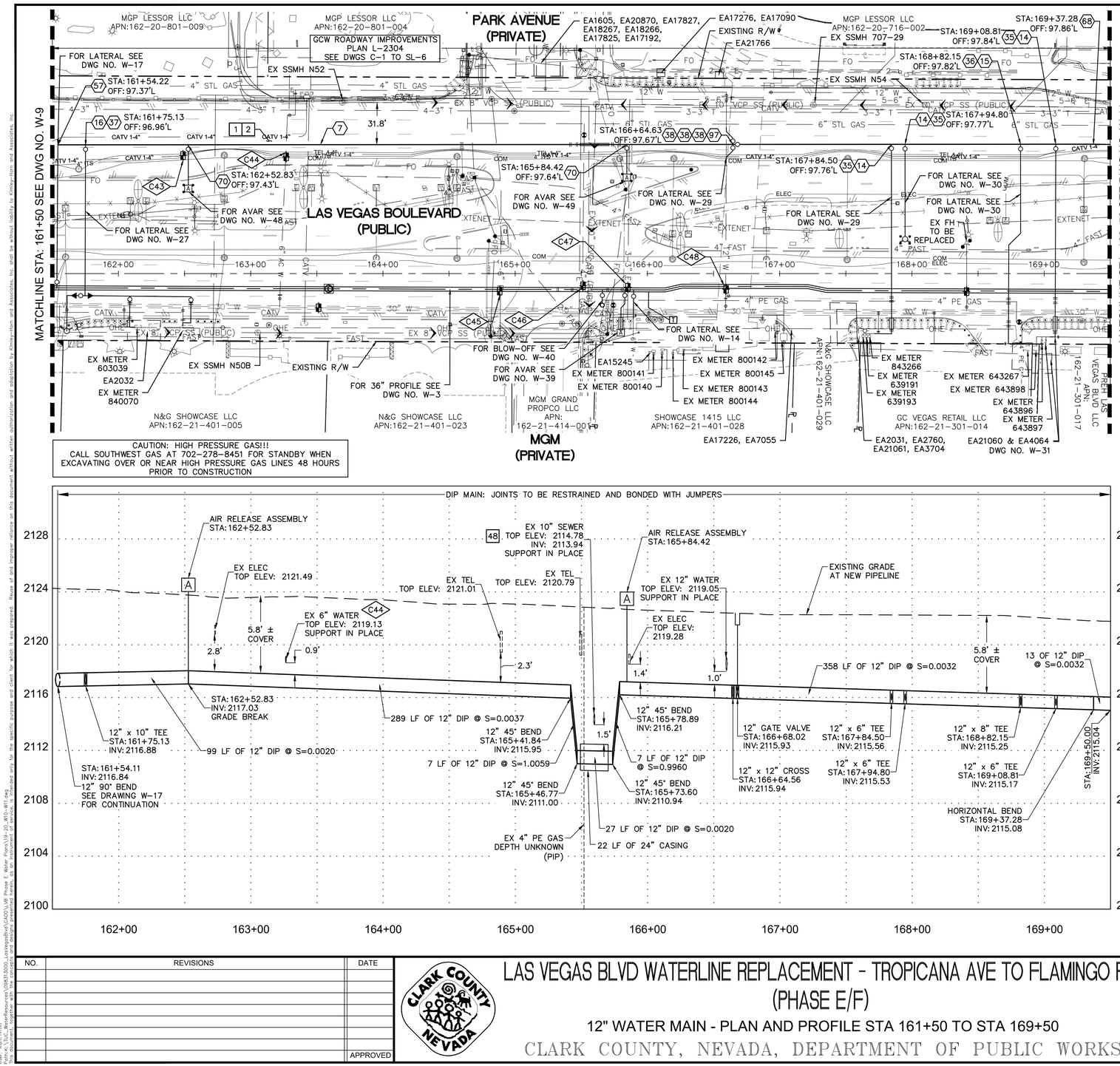

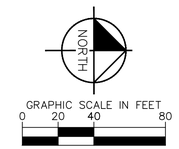

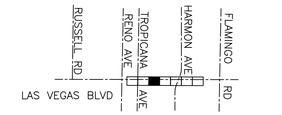

KEY MAP

NTS

LAS VEGAS BOULEVARD WATERLINE IMPROVEMENTS

CONSTRUCTION INDEX

- (7) INSTALL 12" DIP, RESTRAIN AND BOND ALL JOINTS
- (14) INSTALL 12" X 6" TEE, RESTRAIN JOINTS
- (15) INSTALL 12" X 8" TEE, RESTRAIN JOINTS
- (16) INSTALL 12" X 10" TEE, RESTRAIN JOINTS
- (35) INSTALL 6" GATE VALVE PER DETAIL 2 ON DWG WD-11 & UDACS PLT NO. 39 ON DWG WD-17
- (36) INSTALL 8" GATE VALVE PER DETAIL 2 ON DWG WD-11 & UDACS PLT NO. 39 ON DWG WD-17
- (37) INSTALL 10" GATE VALVE PER DETAIL 2 ON DWG WD-11 & UDACS PLT NO. 39 ON DWG WD-17
- (38) INSTALL 12" GATE VALVE PER DETAIL 2 ON DWG WD-11 & UDACS PLT NO. 39 ON DWG WD-17
- (57) INSTALL 12" X 90° BEND, RESTRAIN JOINTS
- (68) HORIZONTAL DEFLECTION, RESTRAIN JOINTS
- (70) INSTALL AIR RELEASE VALVE ASSEMBLY PER DETAIL 1 ON DWG WD-9
- (97) INSTALL 12" x 12" CROSS, RESTRAIN JOINTS

CONSTRUCTION NOTES

1. ALL TRENCH PER DETAILS ON DWG WD-1
2. SAWCUT AND/OR MATCH EXISTING GRADE. CONTRACTOR TO COORDINATE W/ CLARK COUNTY INSPECTOR FOR SAWCUT LOCATIONS
48. EXISTING SEWER MUST BE PROTECTED IN PLACE PER DCSWCS

POTHOLE NO.	UTILITY, SIZE, AND MATERIAL LOCATED	DEPTH OF COVER	PAVEMENT THICKNESS
C43	DRY HOLE	5.00'	6"
C44	UNKNOWN WATER	4.52'	8"
C45	(2) 3" PLASTIC ELEC/SL	2.70'	8"
C46	30" CONCRETE WATER	9.92'	6"
C47	93" CONCRETE ENCASED ELECTRIC	6.41'	14"
C48	10" PLASTIC WATER	5.08'	8"

FIRE DEPARTMENT APPROVAL

BY: _____ DATE: _____

APPROVAL OF THESE PLANS SHALL NOT BE CONSTRUED TO BE A PERMIT FOR, OR AN APPROVAL OF ANY VIOLATION OF ANY OF THE PROVISIONS OF STATE OR COUNTY LAWS.

APPROVAL OF THE FIRE DEPARTMENT HAVING JURISDICTION IS REQUIRED PRIOR TO OBTAINING FINAL APPROVAL FROM THE LAS VEGAS VALLEY WATER DISTRICT.

CCWRD APPROVAL

CLARK COUNTY WATER RECLAMATION DISTRICT DATE

CCWRD PIPES NUMBER IS 21,955.
SIGNATURE ON THESE PLANS SHALL NOT BE CONSTRUED TO BE A PERMIT FOR OR THE APPROVAL OF ANY VIOLATION OF CLARK COUNTY WATER RECLAMATION DISTRICT RULES, REGULATIONS, OR DESIGN AND CONSTRUCTION STANDARDS.

811 know what's below Call before you dig

SAFETY ALERT Call Before You Overhead 1-702-227-2929

LVVWD APPROVAL

APPROVED FOR CONSTRUCTION

LAS VEGAS VALLEY WATER DISTRICT PLANNING AND ENGINEERING SERVICES

PROJECT No. 139055 FIRST APPROVED DATE _____

UNION PACIFIC RAILROAD Call Before You Dig 1-800-336-9193

Call before you Underground 1-702-432-5300 FEDERAL AND INTERNAL SYSTEM OF TRANSPORTATION

NO.	REVISIONS	DATE
		APPROVED

LAS VEGAS BLVD WATERLINE REPLACEMENT - TROPICANA AVE TO FLAMINGO RD (PHASE E/F)

12" WATER MAIN - PLAN AND PROFILE STA 161+50 TO STA 169+50

CLARK COUNTY, NEVADA, DEPARTMENT OF PUBLIC WORKS

PROFESSIONAL ENGINEER - STATE OF NEVADA
RAY P. MONTOYA
Exp. 12/31/2021
CIVIL
No. 025877
10/08/2021

PROJECT No: 500-897-LV-EF DRAWN BY: GAG/KAS/KMT
DESIGNED BY: ROM/GAG CHECKED BY: ALF/RPM/ROM
APPROVED BY

Kimley»Horn
6671 Las Vegas Boulevard South, Suite 320
Las Vegas, Nevada 89119
Tel. No.(702) 862-3600

SCALE
HORIZ: 1" = 40'
VERT: 1" = 4'
FIELD BOOK

DRAWING NO.
W-10
SHT. 15 OF 80
L-2304

User: Kurt.Tirrin
Path: K:\TNC_Water\Resources\096813000_Lasvegasblvd\CADD\LVB Phase E Water Plans\19-20_WD-W11.dwg
Any reproduction or re-use of this document without written authorization and adaptation by Kimley-Horn and Associates, Inc. shall be without liability to Kimley-Horn and Associates, Inc.
Reuse of and improper reliance on this document without written authorization and adaptation by Kimley-Horn and Associates, Inc. shall be without liability to Kimley-Horn and Associates, Inc.
Reproduced only for the specific purpose and client for which it was prepared.

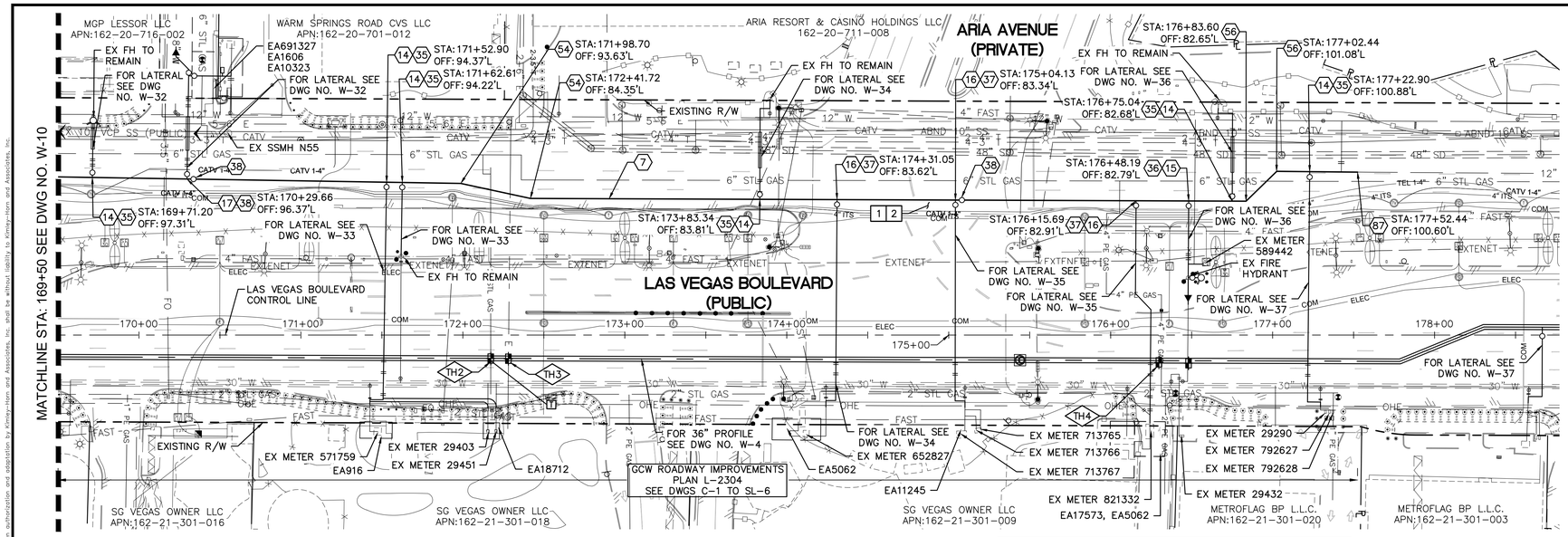

CAUTION: HIGH PRESSURE GAS!!!
CALL SOUTHWEST GAS AT 702-278-8451 FOR STANDBY WHEN EXCAVATING OVER OR NEAR HIGH PRESSURE GAS LINES 48 HOURS PRIOR TO CONSTRUCTION

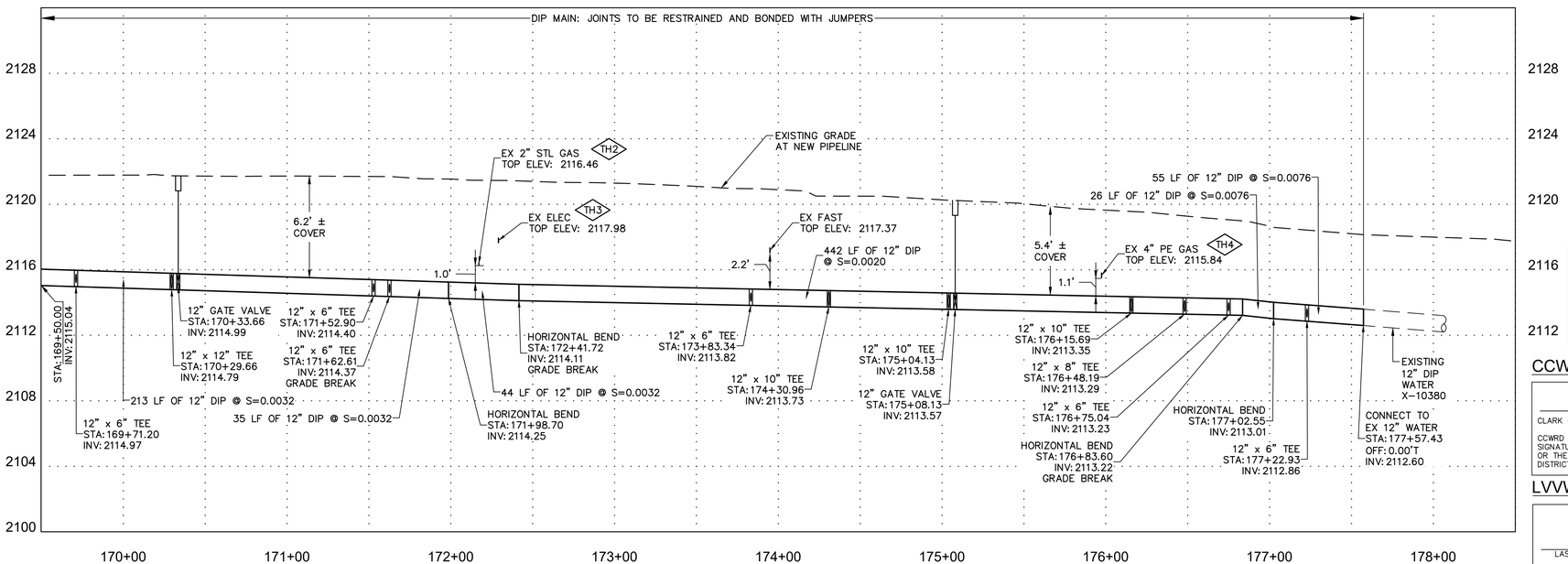

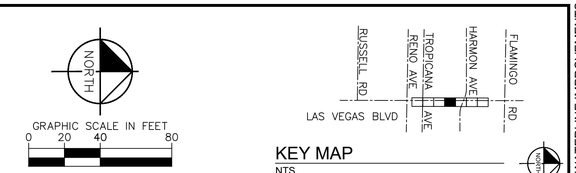

KEY MAP
NTS

LAS VEGAS BOULEVARD WATERLINE IMPROVEMENTS

CONSTRUCTION INDEX

- (7) INSTALL 12" DIP, RESTRAIN AND BOND ALL JOINTS
- (14) INSTALL 12" X 6" TEE, RESTRAIN JOINTS
- (15) INSTALL 12" X 8" TEE, RESTRAIN JOINTS
- (16) INSTALL 12" X 10" TEE, RESTRAIN JOINTS
- (17) INSTALL 12" X 12" TEE, RESTRAIN JOINTS
- (35) INSTALL 6" GATE VALVE PER DETAIL 2 ON DWG WD-11 & UDACS PLT NO. 39 ON DWG WD-17
- (36) INSTALL 8" GATE VALVE PER DETAIL 2 ON DWG WD-11 & UDACS PLT NO. 39 ON DWG WD-17
- (37) INSTALL 10" GATE VALVE PER DETAIL 2 ON DWG WD-11 & UDACS PLT NO. 39 ON DWG WD-17
- (38) INSTALL 12" GATE VALVE PER DETAIL 2 ON DWG WD-11 & UDACS PLT NO. 39 ON DWG WD-17
- (54) INSTALL 12" X 11.25° BEND, RESTRAIN JOINTS
- (56) INSTALL 12" X 45° BEND, RESTRAIN JOINTS
- (87) CONNECT TO EXISTING 12" PIPE WITH ENGINEER APPROVED SLEEVE COUPLING

CONSTRUCTION NOTES

1. ALL TRENCH PER DETAILS ON DWG WD-1
2. SAWCUT AND/OR MATCH EXISTING GRADE. CONTRACTOR TO COORDINATE W/ CLARK COUNTY INSPECTOR FOR SAWCUT LOCATIONS

POTHOLE NO.	UTILITY, SIZE, AND MATERIAL LOCATED	DEPTH OF COVER	PAVEMENT THICKNESS
TH2	2" METAL GAS	4.18'	5"
TH3	3" PLASTIC ELEC	2.64'	7"
TH4	4" PLASTIC GAS	2.74'	6"

FIRE DEPARTMENT APPROVAL

BY: _____ DATE: _____

APPROVAL OF THESE PLANS SHALL NOT BE CONSTRUED TO BE A PERMIT FOR, OR AN APPROVAL OF ANY VIOLATION OF ANY OF THE PROVISIONS OF STATE OR COUNTY LAWS.

APPROVAL OF THE FIRE DEPARTMENT HAVING JURISDICTION IS REQUIRED PRIOR TO OBTAINING FINAL APPROVAL FROM THE LAS VEGAS VALLEY WATER DISTRICT.

CCWRD APPROVAL

CLARK COUNTY WATER RECLAMATION DISTRICT DATE

CCWRD PIPES NUMBER IS 21955
SIGNATURE ON THESE PLANS SHALL NOT BE CONSTRUED TO BE A PERMIT FOR OR THE APPROVAL OF ANY VIOLATION OF CLARK COUNTY WATER RECLAMATION DISTRICT RULES, REGULATIONS, OR DESIGN AND CONSTRUCTION STANDARDS.

LVVWD APPROVAL

APPROVED FOR CONSTRUCTION

LAS VEGAS VALLEY WATER DISTRICT PLANNING AND ENGINEERING SERVICES

PROJECT No. 139055 FIRST APPROVED DATE _____

811 know what's below Call before you dig

SAFETY ALERT Call Before You Overhead 1-702-227-2929

UNION PACIFIC RAILROAD Call Before You Dig 1-800-336-9193

HAND DIGGING UNDERGROUND UTILITIES, SERVICE CONNECTS AND STREET LIGHTS WITHIN 24" OF CURB
CALL BEFORE YOU DIG UNDERGROUND
Call before you UnderGround 1-702-432-5300
FREEWAY AND ARTERIAL SYSTEM OF TRANSPORTATION

NO.	REVISIONS	DATE
		APPROVED

CLARK COUNTY NEVADA

LAS VEGAS BLVD WATERLINE REPLACEMENT - TROPICANA AVE TO FLAMINGO RD (PHASE E/F)

12" WATER MAIN - PLAN AND PROFILE STA 169+50 TO STA 178+50

CLARK COUNTY, NEVADA, DEPARTMENT OF PUBLIC WORKS

PROFESSIONAL ENGINEER - STATE OF NEVADA
RAY P. MONTOYA
Exp. 12/31/2021
CIVIL
No. 025877
10/08/2021

PROJECT No: 500-897-LV-EF DRAWN BY: GAG/KAS/KMT
DESIGNED BY: ROM/GAG CHECKED BY: ALF/RPM/ROM
APPROVED BY _____

Kimley»Horn
6671 Las Vegas Boulevard South, Suite 320
Las Vegas, Nevada 89119
Tel. No.(702) 862-3600

SCALE
HORIZ: 1" = 40'
VERT: 1" = 4'
FIELD BOOK

DRAWING NO.
W-11
SHT. 16 OF 80
L-2304

Reuse of and improper reliance on this document without written authorization and adaptation by Kimley-Horn and Associates, Inc. shall be without liability to Kimley-Horn and Associates, Inc.
Plotted on: Mar 10, 2021 - 10:11am
User: Kori.Timin
Path: K:\TUC_Waterlines\139055.00_LasVegasBlvd\CADD\LVB Phase E Water Plans\11-20_W10-W11.dwg

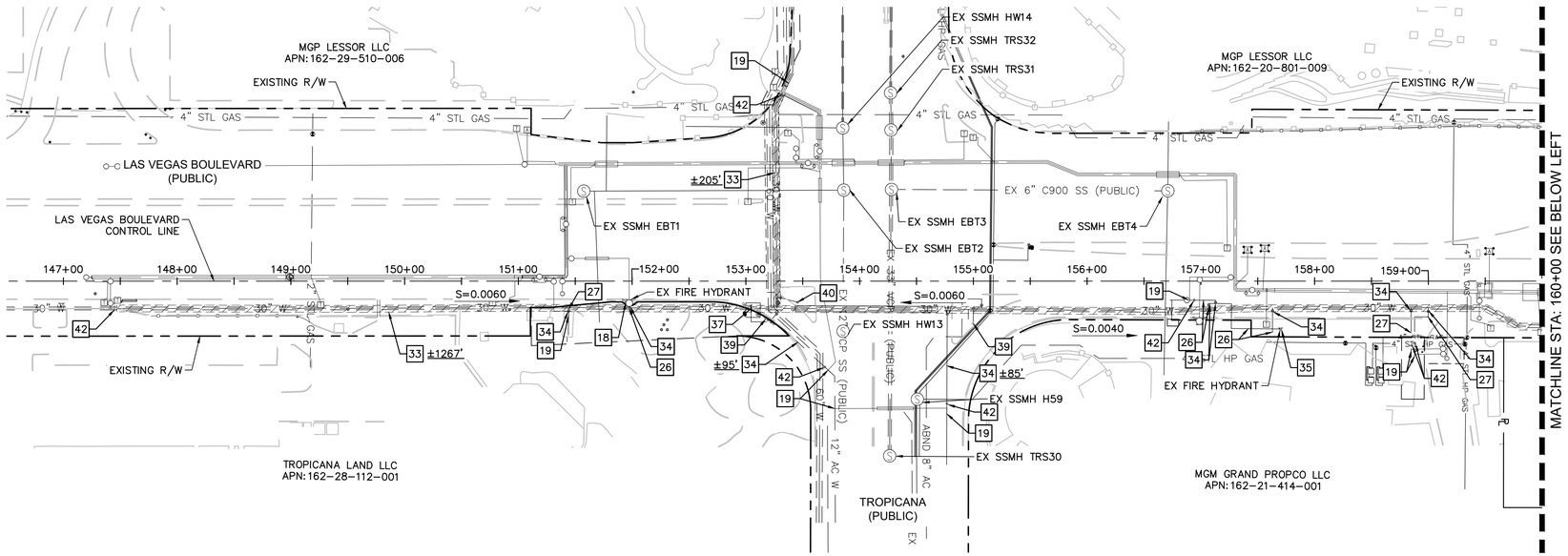

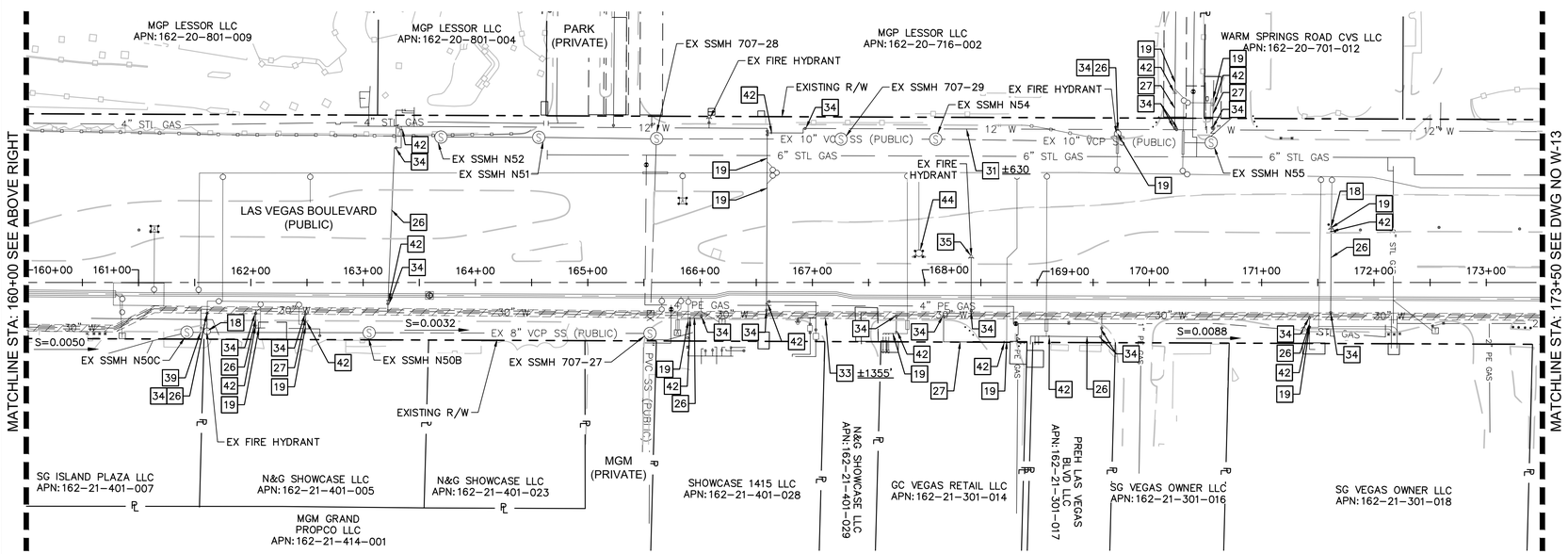

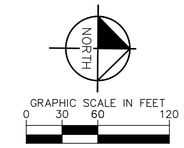

CONSTRUCTION NOTES

- 18 EXISTING FIRE HYDRANT TO REMAIN IN SERVICE PER NOTE 6 OF LVVWD SYSTEM ABANDONMENT NOTES ON DWG WG-3
- 19 POINT OF CONNECTION
- 26 ABANDON IN PLACE EXIST. 6" SERVICE LATERAL PER NOTE 4 OF LVVWD SYSTEM ABANDONMENT NOTES ON DWG WG-3
- 27 ABANDON IN PLACE EXIST. 8" SERVICE LATERAL PER NOTE 4 OF LVVWD SYSTEM ABANDONMENT NOTES ON DWG WG-3
- 31 ABANDON IN PLACE EXIST. 12" MAIN PIPE PER NOTE 2 OF LVVWD SYSTEM ABANDONMENT NOTES ON DWG WG-3
- 33 ABANDON IN PLACE EXIST. 30" MAIN PIPE PER NOTE 2 LVVWD SYSTEM ABANDONMENT NOTES ON DWG WG-3
- 34 ABANDON IN PLACE EXIST. VALVE PER ABANDONMENT OF VALVES NOTE THIS DRAWING
- 35 ABANDON EXISTING FIRE HYDRANT AND LATERAL PER NOTE 5 OF LVVWD SYSTEM ABANDONMENT NOTES ON DWG WG-3
- 37 ABANDON VAULT PER DETAIL 3 ON DWG WD-12
- 39 ABANDON ABOVE-GROUND AVAR APPURTENANCE AND LATERAL PIPING PER LVVWD SYSTEM ABANDONMENT NOTES ON DWG WG-3
- 42 EXISTING WATERLINE TO BE CAPPED PER LVVWD SYSTEM ABANDONMENT NOTES ON DWG WG-3
- 44 NEW FIRE HYDRANT LOCATION

ABANDONMENT OF VALVES

ALL VALVES TO BE ABANDONED SHALL BE ABANDONED IN THE CLOSED POSITION, UNLESS SHOWN OTHERWISE, BY REMOVING A MINIMUM OF TWENTY-FOUR (24") INCHES FROM THE TOP OF THE VALVE BOX AND THEN FILLING THE BOTTOM OF THE BOX WITH A MINIMUM OF EIGHT (8") INCHES OF SAND OR TYPE II AGGREGATE BASE. THE REMAINING PORTION OF THE VALVE BOX SHALL BE FILLED WITH CONCRETE HAVING A COMPRESSIVE STRENGTH OF AT LEAST TWO THOUSAND (2,000) PSI.

CUT AND CAP

THE LATERAL MUST BE CUT WITHIN ONE (1) FOOT OF THE ABANDONED VALVE, OR AS SHOWN ON PLANS, AND CAPPED. THE CONTRACTOR SHALL CUT THE EXISTING PIPE WHERE SHOWN ON THE DRAWING AND INSTALL A CAP COMPLETE WITH THRUST BLOCK. WHERE A JOINT OR COUPLING IN THE EXISTING PIPE IS UNCOVERED AT THE CUT AND CAP LOCATIONS, THE INSTALLATION OF A PLUG MAY BE PERMITTED WITH AGENCY APPROVAL. A CONCRETE THRUST BLOCK SHALL BE INSTALLED AT ALL CAP OR PLUG LOCATIONS IN ACCORDANCE WITH THE PROVISIONS OF UDACS PLATE 31.

NOTE TO CONTRACTOR

1. CONTRACTOR TO COORDINATE WITH LAS VEGAS VALLEY WATER DISTRICT (LVVWD) TO VERIFY EXISTING AND ABANDONED MAINS AND VALVE CONDITIONS.
2. FOR ABANDONMENT OF EXISTING SERVICE LATERALS TWO (2) INCH AND SMALLER, SEE LAS VEGAS VALLEY WATER DISTRICT SYSTEM ABANDONMENT NOTE 2, SHEET WG-3.
3. FOR ABANDONMENT OF EXISTING SERVICE LATERALS THREE (3) INCH AND LARGER, SEE LAS VEGAS VALLEY WATER DISTRICT SYSTEM ABANDONMENT NOTE 3, SHEET WG-3.
4. FOR ABANDONMENT PURPOSES, CONTRACTOR SHALL CONTACT AND/OR COORDINATE WITH APPROPRIATE AGENCY, ACCESS TO EXISTING 36" WATER MAIN.

LEGEND

ZZZZ MAIN TO BE ABANDONED IN PLACE AND FILLED WITH CLSM-1 PER UDACS 2.12. CONTRACTOR TO PROVIDE BOTH METHOD OF FILLING AND ABANDONMENT PLAN TO LVVWD FOR APPROVAL PRIOR TO ABANDONMENT.

811 know what's below Call before you dig

SAFETY ALERT Call Before You Overhead 1-702-227-2929

UNION PACIFIC RAILROAD Call Before You Dig 1-800-336-9193

Call before you UnderGround 1-702-432-5300

LVVWD APPROVAL

APPROVED FOR CONSTRUCTION

LAS VEGAS VALLEY WATER DISTRICT PLANNING AND ENGINEERING SERVICES

PROJECT No. 139055 FIRST APPROVED DATE

LAS VEGAS BOULEVARD WATERLINE IMPROVEMENTS

NO.	REVISIONS	DATE
		APPROVED

CLARK COUNTY NEVADA

LAS VEGAS BLVD WATERLINE REPLACEMENT - TROPICANA AVE TO FLAMINGO RD (PHASE E/F)

WATER ABANDONMENT PLAN STA 146+50 TO STA 173+50

CLARK COUNTY, NEVADA, DEPARTMENT OF PUBLIC WORKS

PROFESSIONAL ENGINEER-STATE OF NEVADA RAY P. MONTOYA Exp. 12/31/2021 CIVIL No. 025877 10/08/2021

PROJECT No: 500-897-LV-EF DRAWN BY: GAG/KAS/KMT
DESIGNED BY: ROM/GAG CHECKED BY: ALF/RPM/ROM
APPROVED BY

Kimley»Horn
6671 Las Vegas Boulevard South, Suite 320
Las Vegas, Nevada 89119
Tel. No.(702) 862-3600

SCALE
HORIZ: 1" = 60'
VERT: N/A
FIELD BOOK

DRAWING NO. W-12
SHT. 17 OF 80
L-2304

This document without written authorization and adaptation by Kimley-Horn and Associates, Inc. shall be without liability to Kimley-Horn and Associates, Inc.
Reuse of and improper reliance on this document is intended only for the specific purpose and client for which it was prepared.
Kimley-Horn and Associates, Inc. shall not be responsible for any modifications or reuse of this drawing by others.

User: Mikayla Bailie
Path: K:\LVC_Waterlines\ru\069313000_LasVegasBlvd\CADD\VB Phase E Water Plans\18_C11.dwg

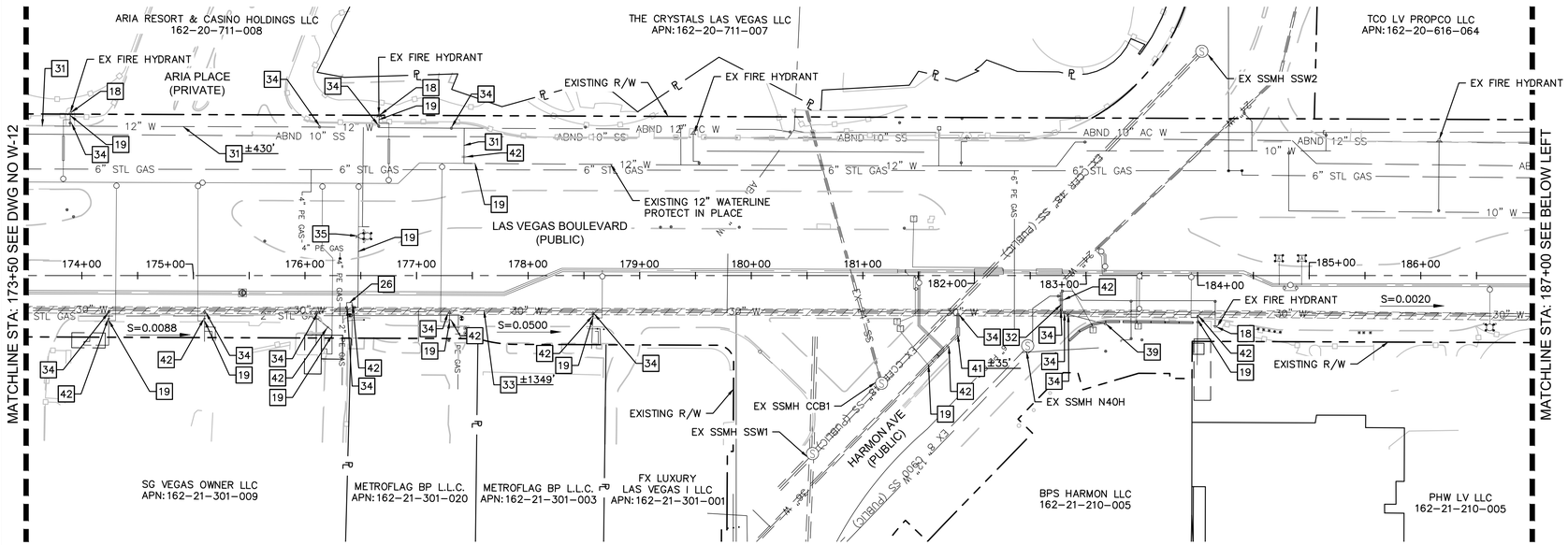

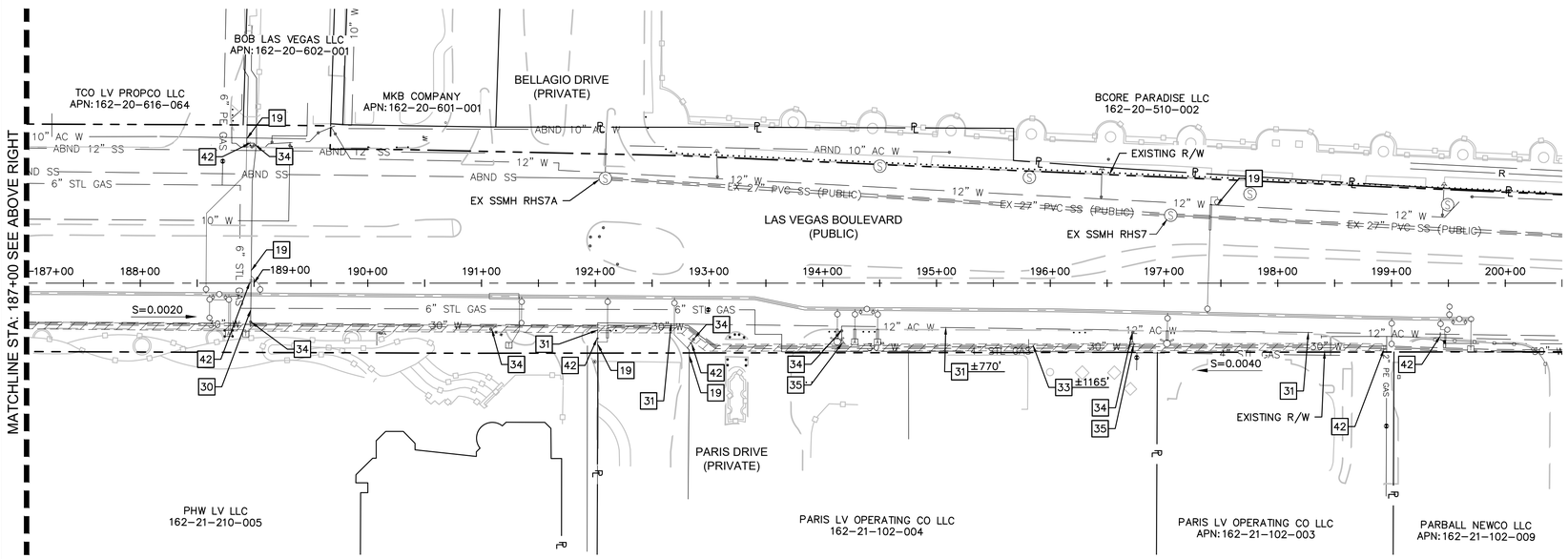

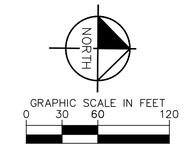

LAS VEGAS BOULEVARD WATERLINE IMPROVEMENTS

CONSTRUCTION NOTES

- 18 EXISTING FIRE HYDRANT TO REMAIN IN SERVICE PER NOTE 6 OF LVVWD SYSTEM ABANDONMENT NOTES ON DWG WG-3
- 19 POINT OF CONNECTION
- 26 ABANDON IN PLACE EXIST. 6" SERVICE LATERAL PER NOTE 4 OF LVVWD SYSTEM ABANDONMENT NOTES ON DWG WG-3
- 30 ABANDON IN PLACE EXIST. 10" MAIN PIPE PER NOTE 2 OF LVVWD SYSTEM ABANDONMENT NOTES ON DWG WG-3
- 31 ABANDON IN PLACE EXIST. 12" MAIN PIPE PER NOTE 2 OF LVVWD SYSTEM ABANDONMENT NOTES ON DWG WG-3
- 32 ABANDON IN PLACE EXIST. 24" MAIN PIPE PER NOTE 2 LVVWD SYSTEM ABANDONMENT NOTES ON DWG WG-3
- 33 ABANDON IN PLACE EXIST. 30" MAIN PIPE PER NOTE 2 LVVWD SYSTEM ABANDONMENT NOTES ON DWG WG-3
- 34 ABANDON IN PLACE EXIST. VALVE PER ABANDONMENT OF VALVES NOTE THIS DRAWING
- 35 ABANDON EXISTING FIRE HYDRANT AND LATERAL PER NOTE 5 OF LVVWD SYSTEM ABANDONMENT NOTES ON DWG WG-3
- 39 ABANDON ABOVE-GROUND AVAR APPURTENANCE AND LATERAL PIPING PER LVVWD SYSTEM ABANDONMENT NOTES ON DWG WG-3
- 41 ABANDON IN PLACE EXIST. 36" MAIN PIPE PER NOTE 2 LVVWD SYSTEM ABANDONMENT NOTES ON DWG WG-3
- 42 EXISTING WATERLINE TO BE CAPPED PER LVVWD SYSTEM ABANDONMENT NOTES ON DWG WG-3

ABANDONMENT OF VALVES

ALL VALVES TO BE ABANDONED SHALL BE ABANDONED IN THE CLOSED POSITION, UNLESS SHOWN OTHERWISE, BY REMOVING A MINIMUM OF TWENTY-FOUR (24") INCHES FROM THE TOP OF THE VALVE BOX AND THEN FILLING THE BOTTOM OF THE BOX WITH A MINIMUM OF EIGHT (8") INCHES OF SAND OR TYPE II AGGREGATE BASE. THE REMAINING PORTION OF THE VALVE BOX SHALL BE FILLED WITH CONCRETE HAVING A COMPRESSIVE STRENGTH OF AT LEAST TWO THOUSAND (2,000) PSI.

CUT AND CAP

THE LATERAL MUST BE CUT WITHIN ONE (1) FOOT OF THE ABANDONED VALVE, OR AS SHOWN ON PLANS, AND CAPPED. THE CONTRACTOR SHALL CUT THE EXISTING PIPE WHERE SHOWN ON THE DRAWING AND INSTALL A CAP COMPLETE WITH THRUST BLOCK. WHERE A JOINT OR COUPLING IN THE EXISTING PIPE IS UNCOVERED AT THE CUT AND CAP LOCATIONS, THE INSTALLATION OF A PLUG MAY BE PERMITTED WITH AGENCY APPROVAL. A CONCRETE THRUST BLOCK SHALL BE INSTALLED AT ALL CAP OR PLUG LOCATIONS IN ACCORDANCE WITH THE PROVISIONS OF UDACS PLATE 31.

NOTE TO CONTRACTOR

1. CONTRACTOR TO COORDINATE WITH LAS VEGAS VALLEY WATER DISTRICT (LVVWD) TO VERIFY EXISTING AND ABANDONED MAINS AND VALVE CONDITIONS.
2. FOR ABANDONMENT OF EXISTING SERVICE LATERALS TWO (2) INCH AND SMALLER, SEE LAS VEGAS VALLEY WATER DISTRICT SYSTEM ABANDONMENT NOTE 2, SHEET WG-3.
3. FOR ABANDONMENT OF EXISTING SERVICE LATERALS THREE (3) INCH AND LARGER, SEE LAS VEGAS VALLEY WATER DISTRICT SYSTEM ABANDONMENT NOTE 3, SHEET WG-3.
4. FOR ABANDONMENT PURPOSES, CONTRACTOR SHALL CONTACT AND/OR COORDINATE WITH APPROPRIATE AGENCY, ACCESS TO EXISTING 36" WATER MAIN.

LEGEND

MAIN TO BE ABANDONED IN PLACE AND FILLED WITH CLSM-1 PER UDACS 2.12. CONTRACTOR TO PROVIDE BOTH METHOD OF FILLING AND ABANDONMENT PLAN TO LVVWD FOR APPROVAL PRIOR TO ABANDONMENT.

811 know what's below Call before you dig

SAFETY ALERT Call Before You Overhead 1-702-227-2929

UNION PACIFIC RAILROAD Call Before You Dig 1-800-336-9193

Call before you UnderGround 1-702-432-5300

LVVWD APPROVAL

APPROVED FOR CONSTRUCTION

LAS VEGAS VALLEY WATER DISTRICT PLANNING AND ENGINEERING SERVICES

PROJECT No. 139055 FIRST APPROVED DATE

NO.	REVISIONS	DATE
		APPROVED

CLARK COUNTY NEVADA

LAS VEGAS BLVD WATERLINE REPLACEMENT - TROPICANA AVE TO FLAMINGO RD (PHASE E/F)

WATER ABANDONMENT PLAN STA 173+50 TO STA 200+50

CLARK COUNTY, NEVADA, DEPARTMENT OF PUBLIC WORKS

PROFESSIONAL ENGINEER - STATE OF NEVADA
RAY P. MONTOYA
Exp. 12/31/2021
CIVIL
No. 025877
10/08/2021

PROJECT No: 500-897-LV-EF
DESIGNED BY: ROM/GAG
APPROVED BY
DRAWN BY: GAG/KAS/KMT
CHECKED BY: ALF/RPM/ROM

Kimley»Horn
6671 Las Vegas Boulevard South, Suite 320
Las Vegas, Nevada 89119
Tel. No.(702) 862-3600

SCALE
HORIZ: 1" = 60'
VERT: N/A
FIELD BOOK

DRAWING NO.
W-13
SHT. 18 OF 80
L-2304

This document without written authorization and adaptation by Kimley-Horn and Associates, Inc. shall be without liability to Kimley-Horn and Associates, Inc. Reuse of and improper reliance on this document is intended only for the specific purpose and client for which it was prepared. Reuse of and improper reliance on this document without written authorization and adaptation by Kimley-Horn and Associates, Inc. shall be without liability to Kimley-Horn and Associates, Inc.

User: Mikayla.Bailie
Path: K:\LVC_Water\Resources\109837300_LasVegasBlvd\CADD\LVB Phase E Water Plans\18_C11.dwg
Plotted on: Thursday, October 07, 2021 9:39 AM Plotted by: Mikayla.Bailie

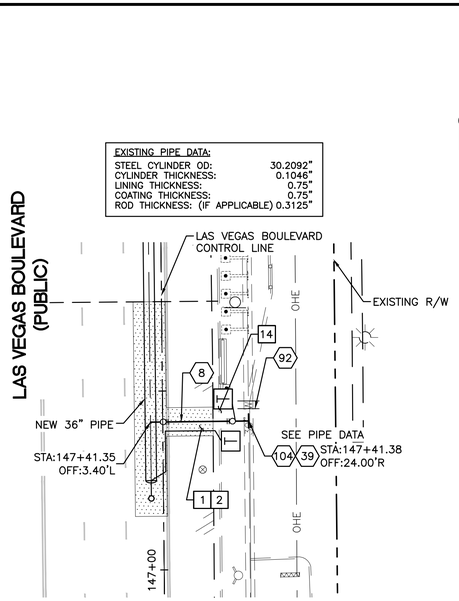

16" WATER MAIN CONNECTION
STA: 147+41.35
SEE DWG NO. W-1

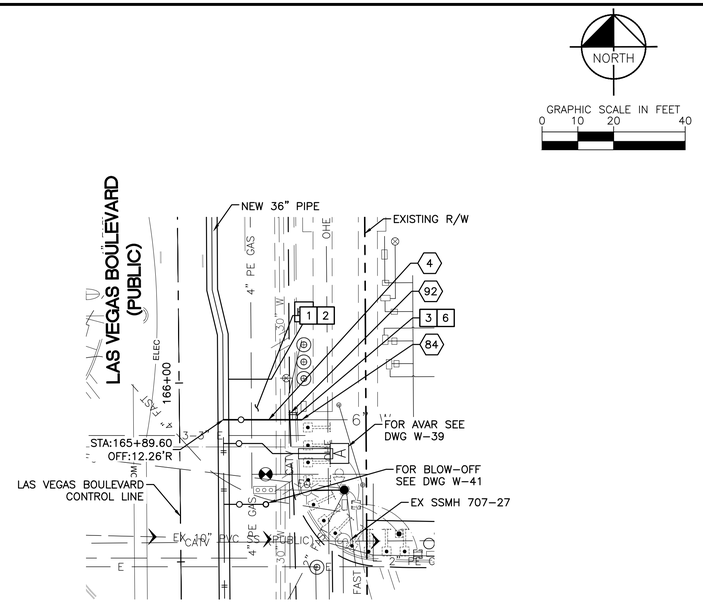

6" WATER LATERAL RECONNECTION
STA: 165+89.60
SEE DWG NO. W-3

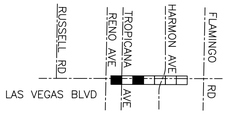

KEY MAP
NTS

CONSTRUCTION INDEX

- (4) INSTALL 6" DIP, RESTRAIN AND BOND ALL JOINTS
- (8) INSTALL 16" DIP, RESTRAIN AND BOND ALL JOINTS
- (39) INSTALL 16" GATE VALVE PER DETAIL 2 ON DWG WD-11 & UDACS PLT NO. 39 ON DWG WD-17
- (84) CONNECT TO EXISTING 6" PIPE WITH ENGINEER APPROVED SLEEVE COUPLING
- (92) CUT AND CAP EXISTING MAIN PIPE PER DETAIL 1 ON DWG WD-12
- (104) 30" X 16" TAPPING SLEEVE & VALVE PER DETAIL 2 ON DWG WD-10 & UDACS PLATE NOS. 34 & 35 ON DWGS WD-15 & WD-16

CONSTRUCTION NOTES

- [1] ALL TRENCH PER DETAILS ON DWG WD-1
- [2] SAWCUT AND/OR MATCH EXISTING GRADE. CONTRACTOR TO COORDINATE W/ CLARK COUNTY INSPECTOR FOR SAWCUT LOCATIONS
- [3] REPLACE "L" TYPE CURB AND GUTTER PER CCAUSD DWG. NO. 216
- [6] REPLACE SIDEWALK PER CCAUSD DWG. NO. 234
- [14] REPLACE COMMERCIAL DRIVEWAY PER CCAUSD DWG. NO. 224

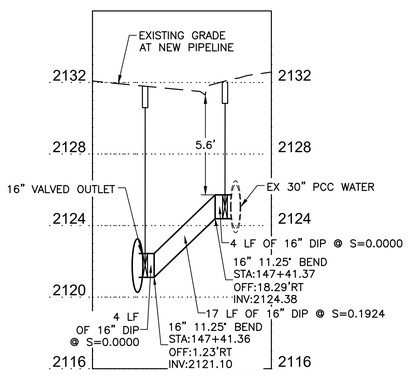

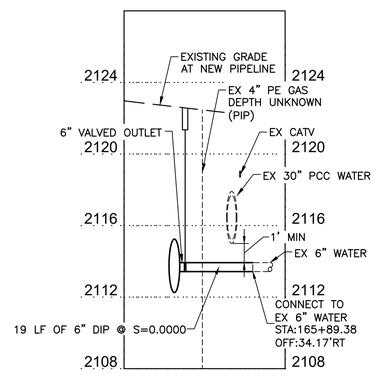

FIRE DEPARTMENT APPROVAL

BY: _____ DATE: _____

APPROVAL OF THESE PLANS SHALL NOT BE CONSTRUED TO BE A PERMIT FOR, OR AN APPROVAL OF ANY VIOLATION OF ANY OF THE PROVISIONS OF STATE OR COUNTY LAWS.

APPROVAL OF THE FIRE DEPARTMENT HAVING JURISDICTION IS REQUIRED PRIOR TO OBTAINING FINAL APPROVAL FROM THE LAS VEGAS VALLEY WATER DISTRICT.

CCWRD APPROVAL

CLARK COUNTY WATER RECLAMATION DISTRICT DATE

CCWRD PIPES NUMBER IS 21955
SIGNATURE ON THESE PLANS SHALL NOT BE CONSTRUED TO BE A PERMIT FOR OR THE APPROVAL OF ANY VIOLATION OF CLARK COUNTY WATER RECLAMATION DISTRICT RULES, REGULATIONS, OR DESIGN AND CONSTRUCTION STANDARDS.

LVVWD APPROVAL

APPROVED FOR CONSTRUCTION

LAS VEGAS VALLEY WATER DISTRICT PLANNING AND ENGINEERING SERVICES

PROJECT No. 139055 FIRST APPROVED DATE _____

811 know what's below Call before you dig

SAFETY ALERT Call Before You Overhead 1-702-227-2929

UNION PACIFIC RAILROAD Call Before You Dig 1-800-336-9193

Call before you UnderGround 1-702-492-5300

NO.	REVISIONS	DATE
		APPROVED

CLARK COUNTY NEVADA

LAS VEGAS BLVD WATERLINE REPLACEMENT - TROPICANA AVE TO FLAMINGO RD (PHASE E/F)

36" WATER MAIN - LATERAL PLAN AND PROFILE STA 147+41 & STA 165+89

CLARK COUNTY, NEVADA, DEPARTMENT OF PUBLIC WORKS

PROFESSIONAL ENGINEER - STATE OF NEVADA
RAY P. MONTOYA
Exp. 12/31/2021
CIVIL
No. 025817
10/08/2021

PROJECT No: 500-897-LV-EF DRAWN BY: GAG/KAS/KMT
DESIGNED BY: ROM/GAG CHECKED BY: ALF/RPM/ROM
APPROVED BY _____

Kimley»Horn
6671 Las Vegas Boulevard South, Suite 320
Las Vegas, Nevada 89119
Tel. No.(702) 862-3600

SCALE
HORIZ: 1" = 20'
VERT: 1" = 4'
FIELD BOOK

DRAWING NO.
W-14
SHT. 19 OF 80
L-2304

LAS VEGAS BOULEVARD WATERLINE IMPROVEMENTS

User: Gerardo.Gonzalez
Path: K:\TUC_Waterresources\065813000_Lasvegasblvd\CADD\WD Phase E Water Plans\20_W-15_L1.dwg
Kimley-Horn and Associates, Inc. makes no representations or warranties, and its instruments of service are intended only for the specific purpose and client for which it was prepared. Reuse of and improper reliance on this document without written authorization and adaptation by Kimley-Horn and Associates, Inc. shall be without liability to Kimley-Horn and Associates, Inc.

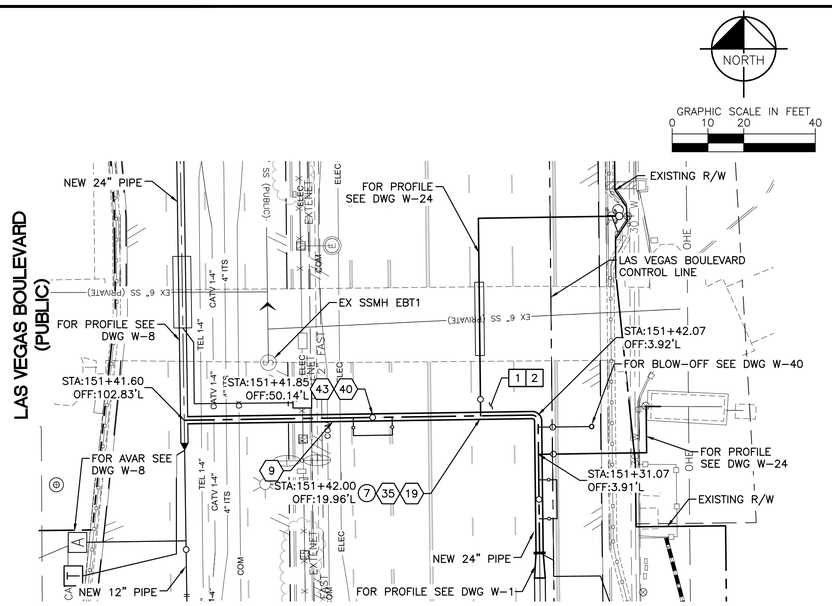

24" WATER MAIN CONNECTION
STA: 151+41.60
SEE DWG NO. W-1

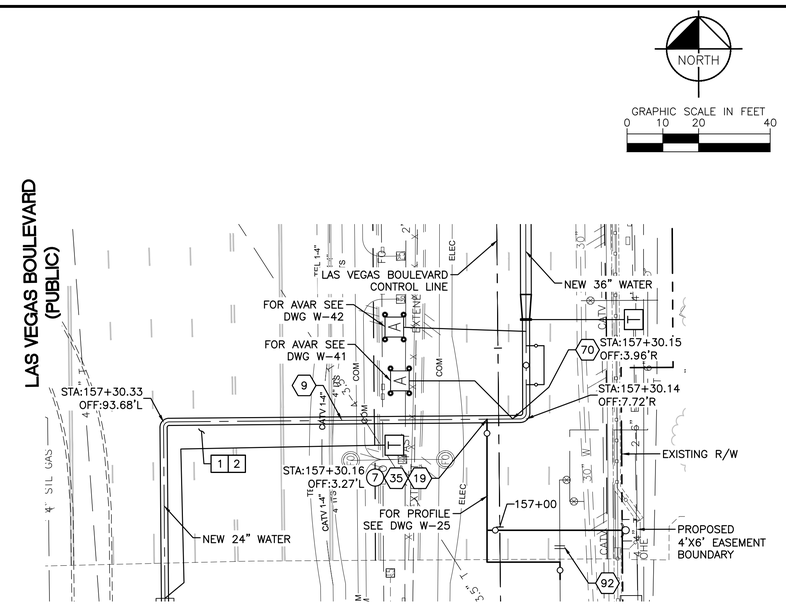

24" WATER MAIN CONNECTION
STA: 157+30.33
SEE DWG NO. W-2

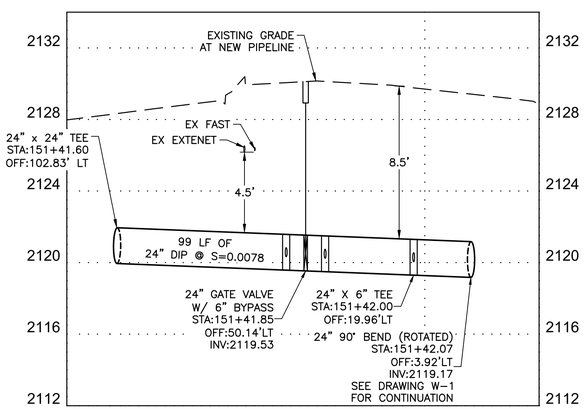

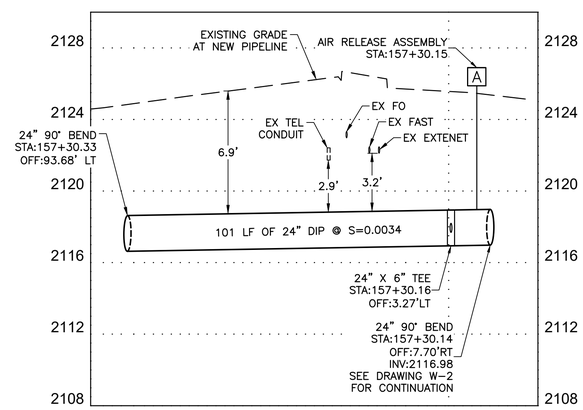

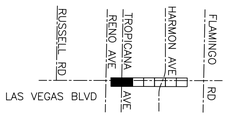

KEY MAP
NTS

CONSTRUCTION INDEX

- (9) INSTALL 24" DIP, RESTRAIN AND BOND ALL JOINTS
- (19) INSTALL 24" X 6" TEE, RESTRAIN JOINTS
- (35) INSTALL 6" GATE VALVE PER DETAIL 2 ON DWG WD-11 & UDACS PLT NO. 39 ON DWG WD-17
- (40) INSTALL 24" GATE VALVE PER DETAILS 2 & 3 ON DWGS WD-10 & WD-11
- (43) INSTALL 6" DIP BYPASS ASSEMBLY W/ 6" GATE VALVES, RESTRAIN JOINTS (NOT THRUST BLOCKED), PER DETAIL 2 ON DWG WD-10 & DETAIL 2 & 3 DWG WD-11
- (70) INSTALL AIR RELEASE VALVE ASSEMBLY PER DETAIL 1 ON DWG WD-9
- (92) CUT AND CAP EXISTING MAIN PIPE PER DETAIL 1 ON DWG WD-12

CONSTRUCTION NOTES

1. ALL TRENCH PER DETAILS ON DWG WD-1
2. SAWCUT AND/OR MATCH EXISTING GRADE. CONTRACTOR TO COORDINATE W/ CLARK COUNTY INSPECTOR FOR SAWCUT LOCATIONS

CATHODIC PROTECTION

(7) INSTALL FLANGE INSULATING KIT PER DETAIL 1 ON DWG WD-22

FIRE DEPARTMENT APPROVAL

BY: _____ DATE: _____

APPROVAL OF THESE PLANS SHALL NOT BE CONSTRUED TO BE A PERMIT FOR, OR AN APPROVAL OF ANY VIOLATION OF ANY OF THE PROVISIONS OF STATE OR COUNTY LAWS.

APPROVAL OF THE FIRE DEPARTMENT HAVING JURISDICTION IS REQUIRED PRIOR TO OBTAINING FINAL APPROVAL FROM THE LAS VEGAS VALLEY WATER DISTRICT.

CCWRD APPROVAL

CLARK COUNTY WATER RECLAMATION DISTRICT DATE

CCWRD PIPES NUMBER IS 21,955.
SIGNATURE ON THESE PLANS SHALL NOT BE CONSTRUED TO BE A PERMIT FOR OR THE APPROVAL OF ANY VIOLATION OF CLARK COUNTY WATER RECLAMATION DISTRICT RULES, REGULATIONS, OR DESIGN AND CONSTRUCTION STANDARDS.

LVVWD APPROVAL

APPROVED FOR CONSTRUCTION

LAS VEGAS VALLEY WATER DISTRICT PLANNING AND ENGINEERING SERVICES

PROJECT No. 139055 FIRST APPROVED DATE _____

811 know what's below Call before you dig

SAFETY ALERT Call Before You Overhead 1-702-227-2929

UNION PACIFIC RAILROAD Call Before You Dig 1-800-336-9193

Call before you UnderGround 1-702-432-5300

NO.	REVISIONS	DATE
		APPROVED

CLARK COUNTY NEVADA

LAS VEGAS BLVD WATERLINE REPLACEMENT - TROPICANA AVE TO FLAMINGO RD (PHASE E/F)

24" WATER MAIN - LATERAL PLAN AND PROFILE STA 151+41 & STA 157+30

CLARK COUNTY, NEVADA, DEPARTMENT OF PUBLIC WORKS

PROFESSIONAL ENGINEER - STATE OF NEVADA
RAY P. MONTOYA
Exp. 12/31/2021
CIVIL
No. 025877
10/08/2021

PROJECT No: 500-897-LV-EF DRAWN BY: GAG/KAS/KMT
DESIGNED BY: ROM/GAG CHECKED BY: ALF/RPM/ROM
APPROVED BY

Kimley»Horn
6671 Las Vegas Boulevard South, Suite 320
Las Vegas, Nevada 89119
Tel. No.(702) 862-3600

SCALE
HORIZ: 1" = 20'
VERT: 1" = 4'
FIELD BOOK

DRAWING NO.
W-15
SHT. 20 OF 80
L-2304

LAS VEGAS BOULEVARD WATERLINE IMPROVEMENTS

User: Cerpinda.Gonzalez
Path: K:\TNC_Water\Resources\109837.1300_Lasvegasblvd\CADD\LVB Phase E Water Plans\20_W-15_L1.dwg
Any reproduction or use of this document or its contents is prohibited without written authorization and adaptation by Kimley-Horn and Associates, Inc. shall be without liability to Kimley-Horn and Associates, Inc.
Reuse of and improper reliance on this document without written authorization and adaptation by Kimley-Horn and Associates, Inc. shall be without liability to Kimley-Horn and Associates, Inc.
Any reproduction or use of this document or its contents is prohibited. Reuse of and improper reliance on this document without written authorization and adaptation by Kimley-Horn and Associates, Inc. shall be without liability to Kimley-Horn and Associates, Inc.
Intended only for the specific purpose and client for which it was prepared.

CATHODIC PROTECTION

(3) INSTALL TYPE I (INSULATED) TEST STATION PER DETAIL 1 ON DWG WD-20

(4) INSTALL TYPE I (INSULATED) TEST STATION PER DETAIL 3 ON DWG WD-20

(5) INSTALL TYPE C/F TEST STATION (CASING/FOREIGN) PER DETAIL 4 ON DWG WD-20

(7) INSTALL FLANGE INSULATING KIT PER DETAIL 1 ON DWG WD-22

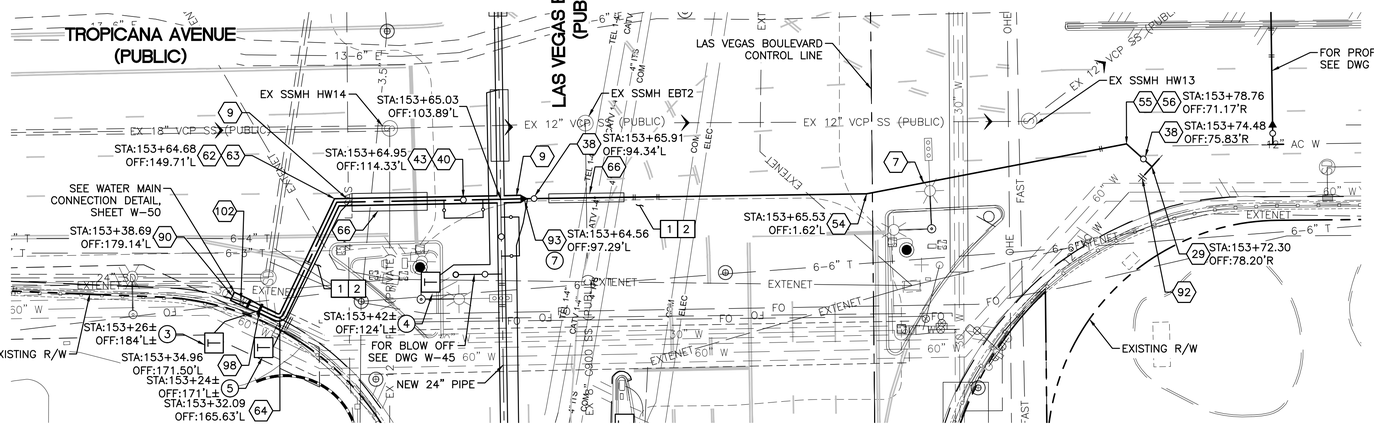

24" AND 12" WATER MAIN INTERCONNECTIONS
STA: 153+65.03
SEE DWG NO. W-9

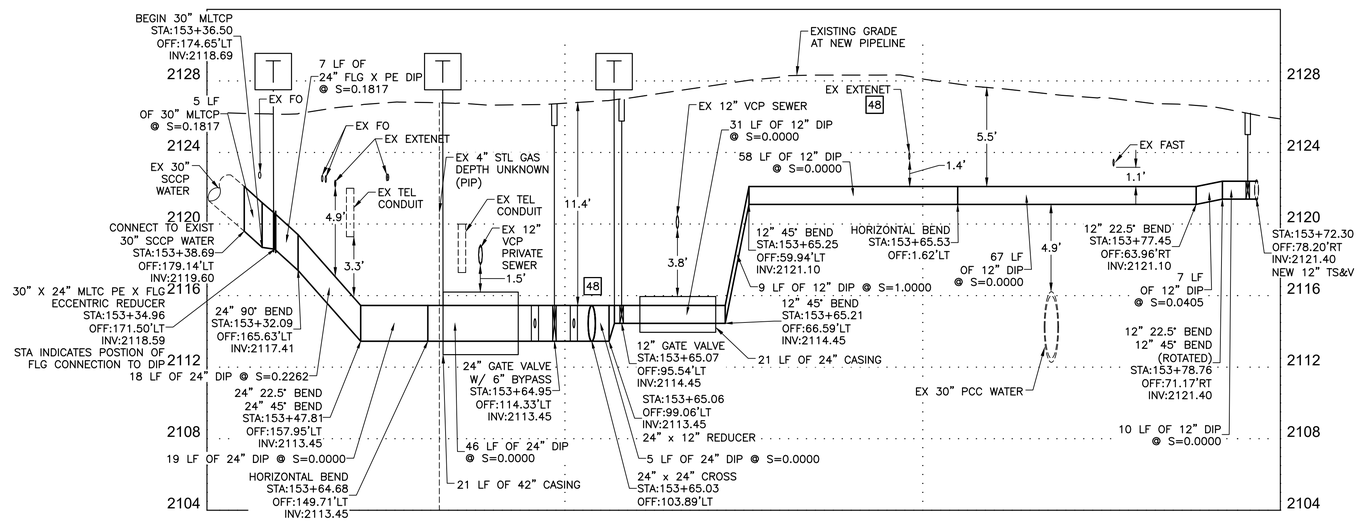

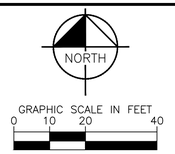

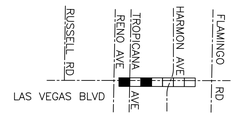

KEY MAP
NTS

CONSTRUCTION INDEX

(7) INSTALL 12" DIP, RESTRAIN AND BOND ALL JOINTS

(9) INSTALL 24" DIP, RESTRAIN AND BOND ALL JOINTS

(29) INSTALL 12" X 12" WELD ON TAPPING SLEEVE & VALVE PER DETAIL 2 ON DWG WD-10 & DETAIL 2 & 4 DWG WD-11

(38) INSTALL 12" GATE VALVE PER DETAIL 2 ON DWG WD-11 & UDACS PLT NO. 39 ON DWG WD-17

(40) INSTALL 24" GATE VALVE PER DETAILS 2 & 3 ON DWGS WD-10 & WD-11

(43) INSTALL 6" DIP BYPASS ASSEMBLY W/ 6" GATE VALVES, RESTRAIN JOINTS (NOT THRUST BLOCKED), PER DETAIL 2 ON DWG WD-10 & DETAIL 2 & 3 DWG WD-11

(54) INSTALL 12" X 11.25° BEND, RESTRAIN JOINTS

(55) INSTALL 12" X 22.5° BEND, RESTRAIN JOINTS

(56) INSTALL 12" X 45° BEND, RESTRAIN JOINTS

(62) INSTALL 24" X 22.5° BEND, RESTRAIN JOINTS

(63) INSTALL 24" X 45° BEND, RESTRAIN JOINTS

(64) INSTALL 24" X 90° BEND, RESTRAIN JOINTS

(66) INSTALL PIPE CASING PER UDACS PLATE NOS. 22 & 23 ON DWG WD-14

(90) CONNECT TO EXISTING 30" PIPE PER DETAIL 5 ON DWG WD-13

(92) CUT AND CAP EXISTING MAIN PIPE PER DETAIL 1 ON DWG WD-12

(93) INSTALL 24" X 12" REDUCER, RESTRAIN JOINTS

(98) INSTALL 30" X 24" MLTC REDUCER, WELDED FLANGE WITH FLANGE INSULATING KIT

(102) INSTALL 30" MLTC PIPE, WELD ALL JOINTS

CONSTRUCTION NOTES

[1] ALL TRENCH PER DETAILS ON DWG WD-1

[2] SAWCUT AND/OR MATCH EXISTING GRADE. CONTRACTOR TO COORDINATE W/ CLARK COUNTY INSPECTOR FOR SAWCUT LOCATIONS

[48] EXISTING SEWER MUST BE PROTECTED IN PLACE PER DCSWCS

FIRE DEPARTMENT APPROVAL

BY: _____ DATE: _____

APPROVAL OF THESE PLANS SHALL NOT BE CONSTRUED TO BE A PERMIT FOR, OR AN APPROVAL OF ANY VIOLATION OF ANY OF THE PROVISIONS OF STATE OR COUNTY LAWS.

APPROVAL OF THE FIRE DEPARTMENT HAVING JURISDICTION IS REQUIRED PRIOR TO OBTAINING FINAL APPROVAL FROM THE LAS VEGAS VALLEY WATER DISTRICT.

CCWRD APPROVAL

CLARK COUNTY WATER RECLAMATION DISTRICT DATE

CCWRD PIPES NUMBER IS 21,955
SIGNATURE ON THESE PLANS SHALL NOT BE CONSTRUED TO BE A PERMIT FOR OR THE APPROVAL OF ANY VIOLATION OF CLARK COUNTY WATER RECLAMATION DISTRICT RULES, REGULATIONS, OR DESIGN AND CONSTRUCTION STANDARDS.

LVVWD APPROVAL

APPROVED FOR CONSTRUCTION

LAS VEGAS VALLEY WATER DISTRICT PLANNING AND ENGINEERING SERVICES

PROJECT No. 139055 FIRST APPROVED DATE _____

811 know what's below Call before you dig

SAFETY ALERT Call Before You Overhead 1-702-227-2929

UNION PACIFIC RAILROAD Call Before You Dig 1-800-336-9193

Call before you UnderGround 1-702-432-5300

NO.	REVISIONS	DATE
		APPROVED

CLARK COUNTY NEVADA

LAS VEGAS BLVD WATERLINE REPLACEMENT - TROPICANA AVE TO FLAMINGO RD (PHASE E/F)

24" & 12" WATER MAIN - LATERAL PLAN AND PROFILE STA 153+65

CLARK COUNTY, NEVADA, DEPARTMENT OF PUBLIC WORKS

PROFESSIONAL ENGINEER - STATE OF NEVADA
RAY P. MONTOYA
Exp. 12/31/2021
CIVIL
No. 025877
10/08/2021

PROJECT No: 500-897-LV-EF
DESIGNED BY: ROM/GAG
DRAWN BY: GAG/KAS/KMT
CHECKED BY: ALF/RPM/ROM
APPROVED BY _____

Kimley»Horn
6671 Las Vegas Boulevard South, Suite 320
Las Vegas, Nevada 89119
Tel. No.(702) 862-3600

SCALE
HORIZ: 1" = 20'
VERT: 1" = 4'
FIELD BOOK

DRAWING NO.
W-16
SHT. 21 OF 80
L-2304

LAS VEGAS BOULEVARD WATERLINE IMPROVEMENTS

Reuse of and improper reliance on this document without written authorization and adaptation by Kimley-Horn and Associates, Inc. shall be without liability to Kimley-Horn and Associates, Inc.
This drawing is intended only for the specific purpose and client for which it was prepared.

User: Gerardo.Gonzalez
Path: K:\TUC_WaterResources\068318000_LasVegasBlvd\CADD\LVB Phase E Water Plans\20_W-15_LT.dwg
Plotted on Aug 26, 2021 at 2:15:17 PM by Gonzalez, Gerardo

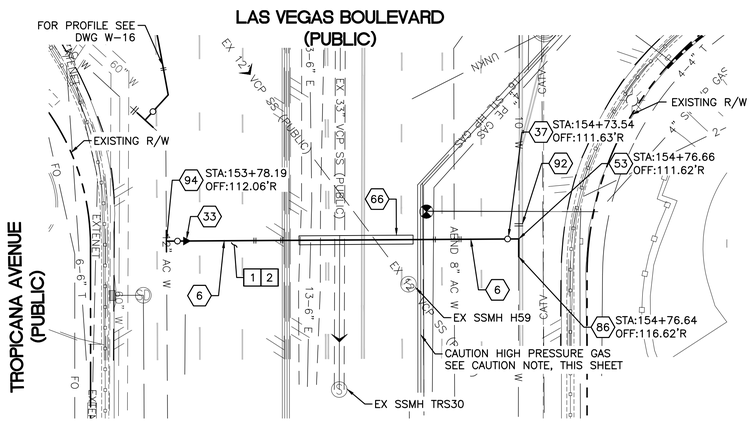

10" WATER MAIN CONNECTION
STA: 153+78.19
SEE DWG NO. W-2

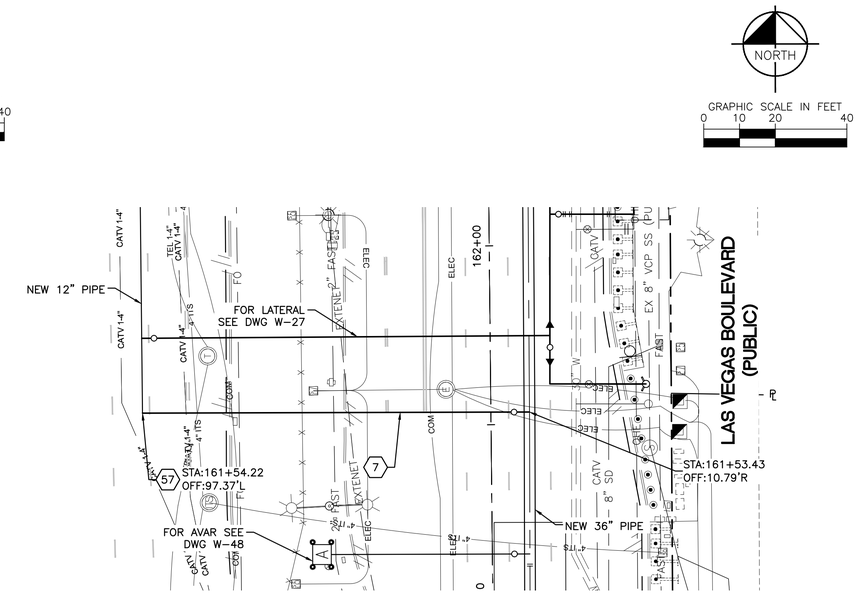

12" WATER INTERCONNECTION
STA: 161+53.43
SEE DWG NO. W-10

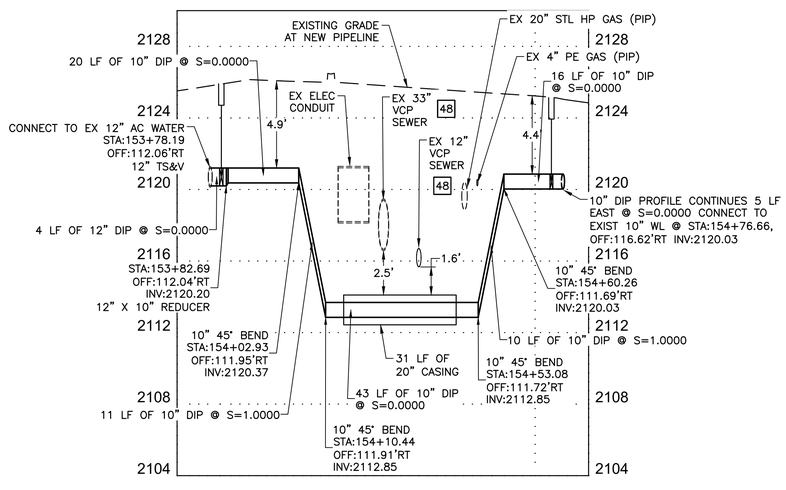

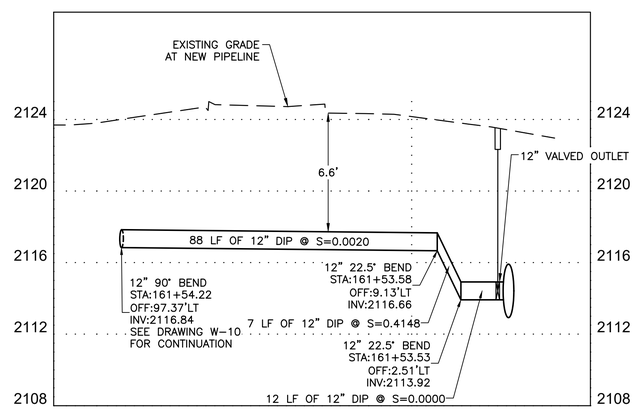

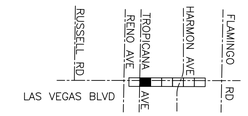

KEY MAP
NTS

LAS VEGAS BOULEVARD WATERLINE IMPROVEMENTS

CONSTRUCTION INDEX

- (6) INSTALL 10" DIP, RESTRAIN AND BOND ALL JOINTS
- (7) INSTALL 12" DIP, RESTRAIN AND BOND ALL JOINTS
- (33) INSTALL 12" X 10" REDUCER, RESTRAIN JOINTS
- (37) INSTALL 10" GATE VALVE PER DETAIL 2 ON DWG WD-11 & UDACS PLT NO. 39 ON DWG WD-17
- (53) INSTALL 10" X 90° BEND, RESTRAIN JOINTS
- (57) INSTALL 12" X 90° BEND, RESTRAIN JOINTS
- (66) INSTALL PIPE CASING PER UDACS PLATE NOS. 22 & 23 ON DWG WD-14
- (86) CONNECT TO EXISTING 10" PIPE WITH ENGINEER APPROVED SLEEVE COUPLING
- (92) CUT AND CAP EXISTING MAIN PIPE PER DETAIL 1 ON DWG WD-12
- (94) 12" X 12" TAPPING SLEEVE & VALVE PER UDACS PLATE NOS. 34 & 35 ON DWGS WD-15 & WD-16

CONSTRUCTION NOTES

1. ALL TRENCH PER DETAILS ON DWG WD-1
2. SAWCUT AND/OR MATCH EXISTING GRADE. CONTRACTOR TO COORDINATE W/ CLARK COUNTY INSPECTOR FOR SAWCUT LOCATIONS
48. EXISTING SEWER MUST BE PROTECTED IN PLACE PER DCSWCS

CAUTION: HIGH PRESSURE GAS!!!
CALL SOUTHWEST GAS AT 702-278-8451 FOR STANDBY WHEN EXCAVATING OVER OR NEAR HIGH PRESSURE GAS LINES 48 HOURS PRIOR TO CONSTRUCTION

FIRE DEPARTMENT APPROVAL

BY:_____ DATE: _____

APPROVAL OF THESE PLANS SHALL NOT BE CONSTRUED TO BE A PERMIT FOR, OR AN APPROVAL OF ANY VIOLATION OF ANY OF THE PROVISIONS OF STATE OR COUNTY LAWS.

APPROVAL OF THE FIRE DEPARTMENT HAVING JURISDICTION IS REQUIRED PRIOR TO OBTAINING FINAL APPROVAL FROM THE LAS VEGAS VALLEY WATER DISTRICT.

CCWRD APPROVAL

CLARK COUNTY WATER RECLAMATION DISTRICT DATE

CCWRD PIPES NUMBER IS 21,955
SIGNATURE ON THESE PLANS SHALL NOT BE CONSTRUED TO BE A PERMIT FOR OR THE APPROVAL OF ANY VIOLATION OF CLARK COUNTY WATER RECLAMATION DISTRICT RULES, REGULATIONS, OR DESIGN AND CONSTRUCTION STANDARDS.

LVVWD APPROVAL

APPROVED FOR CONSTRUCTION

LAS VEGAS VALLEY WATER DISTRICT PLANNING AND ENGINEERING SERVICES

PROJECT No. 139055 FIRST APPROVED DATE _____

811 know what's below Call before you dig

SAFETY ALERT Call Before You Overhead 1-702-227-2929

UNION PACIFIC RAILROAD Call Before You Dig 1-800-336-9193

Call before you UnderGround 1-702-492-5300

NO.	REVISIONS	DATE
		APPROVED

CLARK COUNTY NEVADA

LAS VEGAS BLVD WATERLINE REPLACEMENT - TROPICANA AVE TO FLAMINGO RD (PHASE E/F)

12" WATER MAIN - LATERAL PLAN AND PROFILE STA 153+78 & STA 161+53

CLARK COUNTY, NEVADA, DEPARTMENT OF PUBLIC WORKS

PROFESSIONAL ENGINEER - STATE OF NEVADA
RAY P. MONTOYA
Exp. 12/31/2021
CIVIL
No. 025817
10/08/2021

PROJECT No: 500-897-LV-EF DRAWN BY: GAG/KAS/KMT
DESIGNED BY: ROM/GAG CHECKED BY: ALF/RPM/ROM
APPROVED BY _____

Kimley»Horn
6671 Las Vegas Boulevard South, Suite 320
Las Vegas, Nevada 89119
Tel. No.(702) 862-3600

SCALE
HORIZ: 1" = 20'
VERT: 1" = 4'
FIELD BOOK

DRAWING NO.
W-17
SHT. 22 OF 80
L-2304

User: Gerardo.Gonzalez
Path: K:\LVL_Waterresources\083130000_Lasvegasblvd\CADD\LVB Phase E Water Plan\20_W-15_L1.dwg
These plans are intended only for the specific purpose and client for which it was prepared. Reuse of and improper reliance on this document without written authorization and adaptation by Kimley-Horn and Associates, Inc. shall be without liability to Kimley-Horn and Associates, Inc.

EXISTING 36" MLC PIPE DATA 1:	
STEEL CYLINDER OD:	37.878"
CYLINDER THICKNESS:	0.1875"
LINING THICKNESS:	0.75"
COATING THICKNESS:	1"
ROD THICKNESS: (IF APPLICABLE)	–

NORTH

GRAPHIC SCALE IN FEET
0 10 20 40

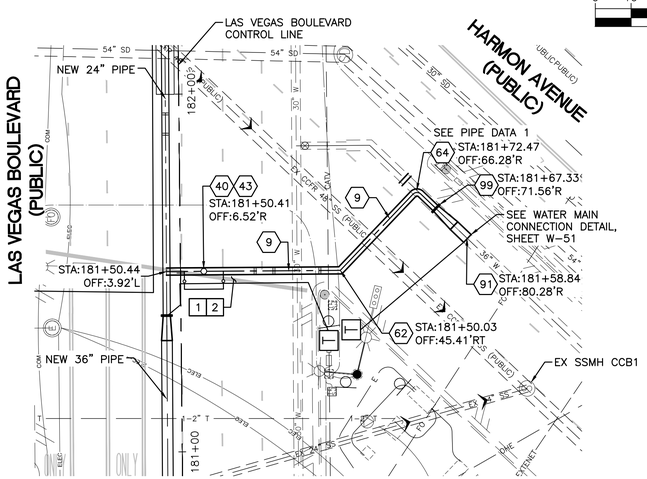

24" WATER LATERAL RECONNECTION
STA: 181+50.44
SEE DWG NO. W-5

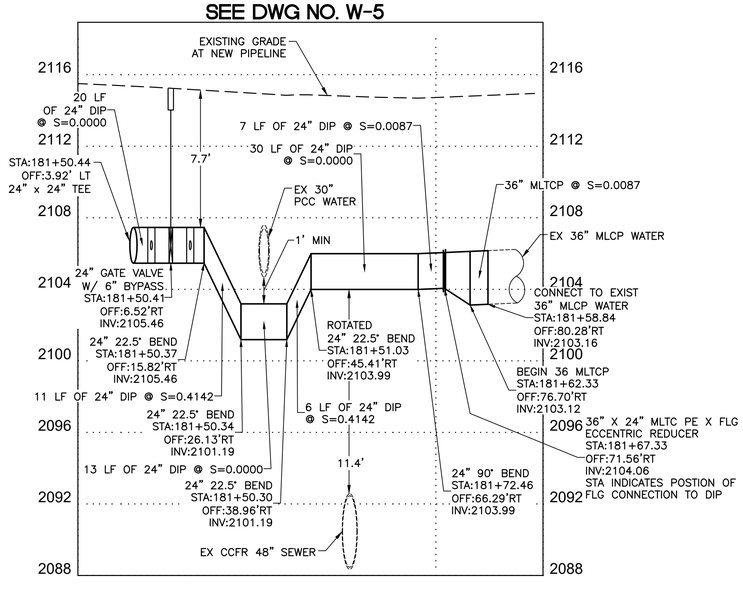

NORTH

GRAPHIC SCALE IN FEET
0 10 20 40

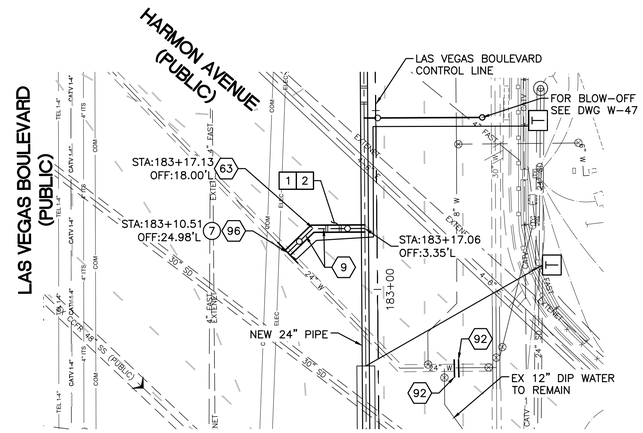

24" WATER LATERAL RECONNECTION
STA: 183+17.06
SEE DWG NO. W-5

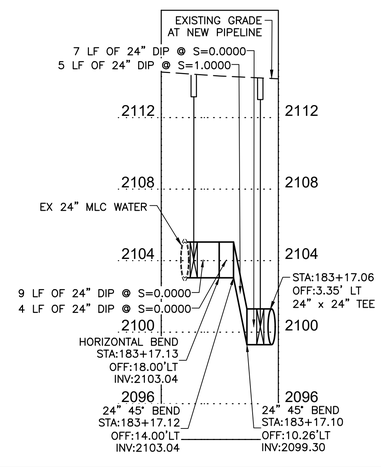

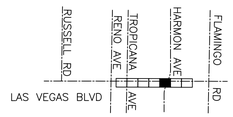

KEY MAP
NTS

NORTH

CONSTRUCTION INDEX

- (9) INSTALL 24" DIP, RESTRAIN AND BOND ALL JOINTS
- (40) INSTALL 24" GATE VALVE PER DETAILS 2 & 3 ON DWGS WD-10 & WD-11
- (43) INSTALL 6" DIP BYPASS ASSEMBLY W/ 6" GATE VALVES, RESTRAIN JOINTS (NOT THRUST BLOCKED), PER DETAIL 2 ON DWG WD-10 & DETAIL 2 & 3 DWG WD-11
- (62) INSTALL 24" X 22.5° BEND, RESTRAIN JOINTS
- (63) INSTALL 24" X 45° BEND, RESTRAIN JOINTS
- (64) INSTALL 24" X 90° BEND, RESTRAIN JOINTS
- (91) CONNECT TO EXISTING 36" PIPE WITH ENGINEER APPROVED SLEEVE COUPLING
- (92) CUT AND CAP EXISTING MAIN PIPE PER DETAIL 1 ON DWG WD-12
- (96) 24" X 24" TAPPING SLEEVE & VALVE PER UDACS PLATE NOS. 34 & 35 ON DWGS WD-15 & WD-16
- (99) INSTALL 36" X 24" MLTC REDUCER, WELDED FLANGE WITH FLANGE INSULATING KIT

CONSTRUCTION NOTES

1. ALL TRENCH PER DETAILS ON DWG WD-1
2. SAWCUT AND/OR MATCH EXISTING GRADE. CONTRACTOR TO COORDINATE W/ CLARK COUNTY INSPECTOR FOR SAWCUT LOCATIONS

CATHODIC PROTECTION

(7) INSTALL FLANGE INSULATING KIT PER DETAIL 1 ON DWG WD-22

FIRE DEPARTMENT APPROVAL

BY: _____ DATE: _____

APPROVAL OF THESE PLANS SHALL NOT BE CONSTRUED TO BE A PERMIT FOR, OR AN APPROVAL OF ANY VIOLATION OF ANY OF THE PROVISIONS OF STATE OR COUNTY LAWS.

APPROVAL OF THE FIRE DEPARTMENT HAVING JURISDICTION IS REQUIRED PRIOR TO OBTAINING FINAL APPROVAL FROM THE LAS VEGAS VALLEY WATER DISTRICT.

CCWRD APPROVAL

CLARK COUNTY WATER RECLAMATION DISTRICT DATE

CCWRD PIPES NUMBER IS 21955.
SIGNATURE ON THESE PLANS SHALL NOT BE CONSTRUED TO BE A PERMIT FOR OR THE APPROVAL OF ANY VIOLATION OF CLARK COUNTY WATER RECLAMATION DISTRICT RULES, REGULATIONS, OR DESIGN AND CONSTRUCTION STANDARDS.

LVVWD APPROVAL

APPROVED FOR CONSTRUCTION

LAS VEGAS VALLEY WATER DISTRICT PLANNING AND ENGINEERING SERVICES

PROJECT No. 139055 FIRST APPROVED DATE _____

811 know what's below Call before you dig

SAFETY ALERT Call Before You Overhead 1-702-227-2929

UNION PACIFIC RAILROAD Call Before You Dig 1-800-336-9193

Call before you Dig Underground 1-702-432-5300 FREEWAY AND ARTERIAL SYSTEM OF TRANSPORTATION

LAS VEGAS BOULEVARD WATERLINE IMPROVEMENTS

NO.	REVISIONS	DATE
		APPROVED

CLARK COUNTY NEVADA

LAS VEGAS BLVD WATERLINE REPLACEMENT - TROPICANA AVE TO FLAMINGO RD (PHASE E/F)

24" WATER MAIN - LATERAL PLAN AND PROFILE STA 181+50 & STA 183+17

CLARK COUNTY, NEVADA, DEPARTMENT OF PUBLIC WORKS

PROFESSIONAL ENGINEER - STATE OF NEVADA
RAY P. MONTOYA
Exp. 12/31/2021
CIVIL
No.025877
10/08/2021

PROJECT No: 500-897-LV-EF
DESIGNED BY: ROM/GAG
APPROVED BY
DRAWN BY: GAG/KAS/KMT
CHECKED BY: ALF/RPM/ROM

Kimley»Horn
6671 Las Vegas Boulevard South, Suite 320
Las Vegas, Nevada 89119
Tel. No.(702) 862-3600

SCALE
HORIZ: 1" = 20'
VERT: 1" = 4'
FIELD BOOK

DRAWING NO.
W-18
SHT. 23 OF 80
L-2304

Reuse of and improper reliance on this document without written authorization and adaptation by Kimley-Horn and Associates, Inc. shall be without liability to Kimley-Horn and Associates, Inc.

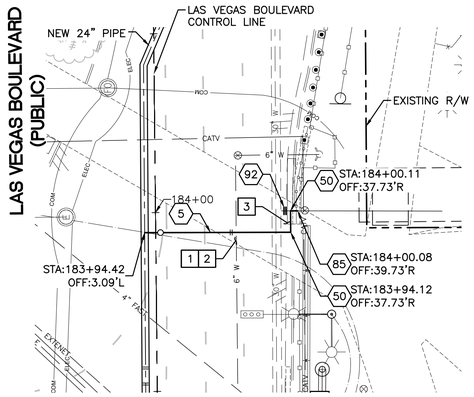

8" WATER LATERAL RECONNECTION
STA: 183+94.42
SEE DWG NO. W-5

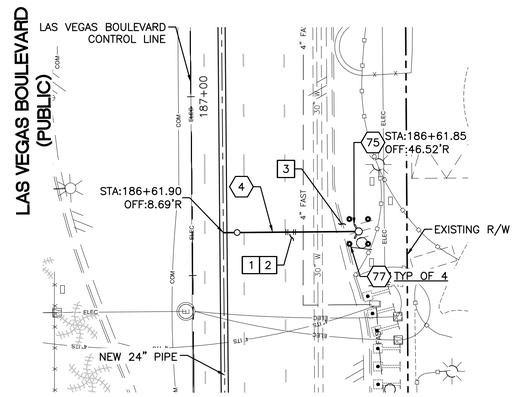

6" FIRE HYDRANT CONNECTION
STA: 186+61.90
SEE DWG NO. W-6

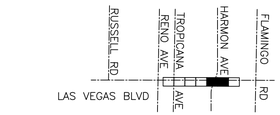

KEY MAP
NTS

CONSTRUCTION INDEX

- (4) INSTALL 6" DIP, RESTRAIN AND BOND ALL JOINTS
- (5) INSTALL 8" DIP, RESTRAIN AND BOND ALL JOINTS
- (50) INSTALL 8" X 90° BEND, RESTRAIN JOINTS
- (75) INSTALL NEW FIRE HYDRANT PER UDACS PLATE NOS. 40 AND 41 ON DWGS WD-17 & WD-18
- (77) INSTALL PROTECTIVE BOLLARD PER UDACS PLATE NO. 75 ON DWG WD-18
- (85) CONNECT TO EXISTING 8" PIPE WITH ENGINEER APPROVED SLEEVE COUPLING
- (92) CUT AND CAP EXISTING MAIN PIPE PER DETAIL 1 ON DWG WD-12

CONSTRUCTION NOTES

1. ALL TRENCH PER DETAILS ON DWG WD-1
2. SAWCUT AND/OR MATCH EXISTING GRADE. CONTRACTOR TO COORDINATE W/ CLARK COUNTY INSPECTOR FOR SAWCUT LOCATIONS
3. REPLACE "L" TYPE CURB AND GUTTER PER CCAUSD DWG. NO. 216

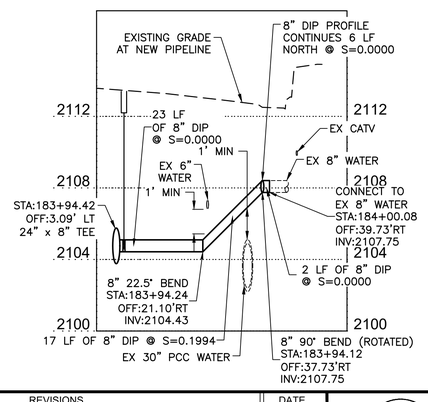

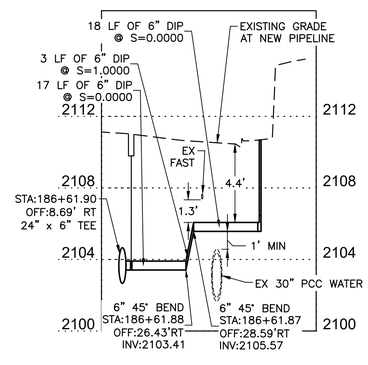

FIRE DEPARTMENT APPROVAL

BY: _____ DATE: _____

APPROVAL OF THESE PLANS SHALL NOT BE CONSTRUED TO BE A PERMIT FOR, OR AN APPROVAL OF ANY VIOLATION OF ANY OF THE PROVISIONS OF STATE OR COUNTY LAWS.

APPROVAL OF THE FIRE DEPARTMENT HAVING JURISDICTION IS REQUIRED PRIOR TO OBTAINING FINAL APPROVAL FROM THE LAS VEGAS VALLEY WATER DISTRICT.

CCWRD APPROVAL

CLARK COUNTY WATER RECLAMATION DISTRICT DATE

CCWRD PIPES NUMBER IS 21955
SIGNATURE ON THESE PLANS SHALL NOT BE CONSTRUED TO BE A PERMIT FOR OR THE APPROVAL OF ANY VIOLATION OF CLARK COUNTY WATER RECLAMATION DISTRICT RULES, REGULATIONS, OR DESIGN AND CONSTRUCTION STANDARDS.

LVVWD APPROVAL

APPROVED FOR CONSTRUCTION

LAS VEGAS VALLEY WATER DISTRICT PLANNING AND ENGINEERING SERVICES

PROJECT No. 139055 FIRST APPROVED DATE _____

811 know what's below Call before you dig

SAFETY ALERT Call Before You Overhead 1-702-227-2929

UNION PACIFIC RAILROAD Call Before You Dig 1-800-336-9193

Call before you UnderGround 1-702-432-5300

NO.	REVISIONS	DATE
		APPROVED

CLARK COUNTY NEVADA

LAS VEGAS BLVD WATERLINE REPLACEMENT - TROPICANA AVE TO FLAMINGO RD (PHASE E/F)

24" WATER MAIN - LATERAL PLAN AND PROFILE STA 183+94 & STA 186+61

CLARK COUNTY, NEVADA, DEPARTMENT OF PUBLIC WORKS

PROFESSIONAL ENGINEER - STATE OF NEVADA
RAY P. MONTOYA
Exp. 12/31/2021
CIVIL
No.025877
10/08/2021

PROJECT No: 500-897-LV-EF
DESIGNED BY: ROM/GAG
APPROVED BY
DRAWN BY: GAG/KAS/KMT
CHECKED BY: ALF/RPM/ROM

Kimley»Horn
6671 Las Vegas Boulevard South, Suite 320
Las Vegas, Nevada 89119
Tel. No.(702) 862-3600

SCALE
HORIZ: 1" = 20'
VERT: 1" = 4'
FIELD BOOK

DRAWING NO.
W-19
SHT. 24 OF 80
L-2304

LAS VEGAS BOULEVARD WATERLINE IMPROVEMENTS

User: Gerardo.Gonzalez
Path: K:\Civil_Water\Resources\098313000_Lasvegasblvd\CADD\LVB Phase E Water Plans\23-28_WTR-W22_L1.dwg
Kimley-Horn and Associates, Inc. plans are prepared for the specific purpose and client for which it was prepared. Reuse of and improper reliance on this document without written authorization and adaptation by Kimley-Horn and Associates, Inc. shall be without liability to Kimley-Horn and Associates, Inc.

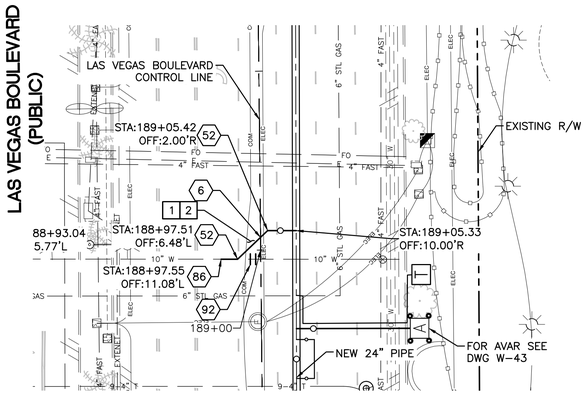

10" WATER LATERAL RECONNECTION
STA: 189+05.33
SEE DWG NO. W-6

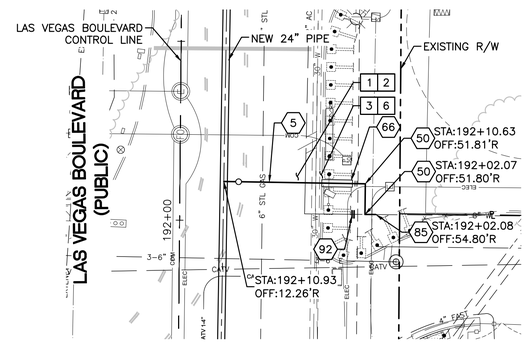

8" WATER LATERAL RECONNECTION
STA: 192+10.93
SEE DWG NO. W-6

KEY MAP
NTS

CONSTRUCTION INDEX

- (5) INSTALL 8" DIP, RESTRAIN AND BOND ALL JOINTS
- (6) INSTALL 10" DIP, RESTRAIN AND BOND ALL JOINTS
- (50) INSTALL 8" X 90° BEND, RESTRAIN JOINTS
- (52) INSTALL 10" X 45° BEND, RESTRAIN JOINTS
- (66) INSTALL PIPE CASING PER UDACS PLATE NOS. 22 & 23 ON DWG WD-14
- (85) CONNECT TO EXISTING 8" PIPE WITH ENGINEER APPROVED SLEEVE COUPLING
- (86) CONNECT TO EXISTING 10" PIPE WITH ENGINEER APPROVED SLEEVE COUPLING
- (92) CUT AND CAP EXISTING MAIN PIPE PER DETAIL 1 ON DWG WD-12

CONSTRUCTION NOTES

1. ALL TRENCH PER DETAILS ON DWG WD-1
2. SAWCUT AND/OR MATCH EXISTING GRADE. CONTRACTOR TO COORDINATE W/ CLARK COUNTY INSPECTOR FOR SAWCUT LOCATIONS
3. REPLACE "L" TYPE CURB AND GUTTER PER CCAUSD DWG. NO. 216
6. REPLACE SIDEWALK PER CCAUSD DWG. NO. 234

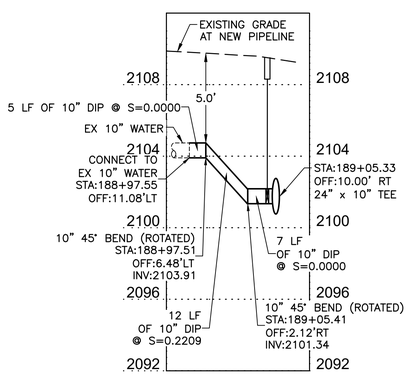

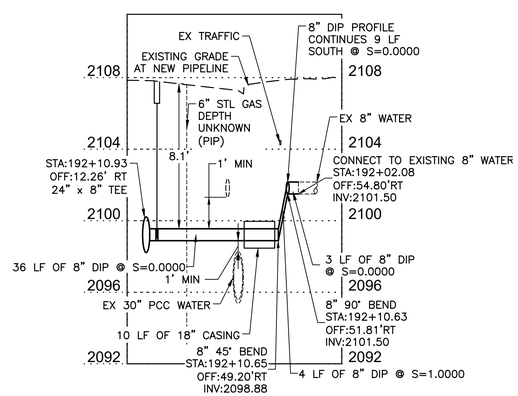

FIRE DEPARTMENT APPROVAL

BY: _____ DATE: _____

APPROVAL OF THESE PLANS SHALL NOT BE CONSTRUED TO BE A PERMIT FOR, OR AN APPROVAL OF ANY VIOLATION OF ANY OF THE PROVISIONS OF STATE OR COUNTY LAWS.

APPROVAL OF THE FIRE DEPARTMENT HAVING JURISDICTION IS REQUIRED PRIOR TO OBTAINING FINAL APPROVAL FROM THE LAS VEGAS VALLEY WATER DISTRICT.

CCWRD APPROVAL

CLARK COUNTY WATER RECLAMATION DISTRICT DATE

CCWRD PIPES NUMBER IS 21,955.
SIGNATURE ON THESE PLANS SHALL NOT BE CONSTRUED TO BE A PERMIT FOR OR THE APPROVAL OF ANY VIOLATION OF CLARK COUNTY WATER RECLAMATION DISTRICT RULES, REGULATIONS, OR DESIGN AND CONSTRUCTION STANDARDS.

LVVWD APPROVAL

APPROVED FOR CONSTRUCTION

LAS VEGAS VALLEY WATER DISTRICT PLANNING AND ENGINEERING SERVICES

PROJECT No. 139055 FIRST APPROVED DATE _____

811 know what's below Call before you dig

SAFETY ALERT Call Before You Overhead 1-702-227-2929

UNION PACIFIC RAILROAD Call Before You Dig 1-800-336-9193

Call before you UnderGround 1-702-432-5300

NO.	REVISIONS	DATE
		APPROVED

CLARK COUNTY NEVADA

LAS VEGAS BLVD WATERLINE REPLACEMENT - TROPICANA AVE TO FLAMINGO RD (PHASE E/F)

24" WATER MAIN - LATERAL PLAN AND PROFILE STA 189+05 & STA 192+10

CLARK COUNTY, NEVADA, DEPARTMENT OF PUBLIC WORKS

PROFESSIONAL ENGINEER - STATE OF NEVADA
RAY P. MONTOYA
Exp. 12/31/2021
CIVIL
No. 025877
10/08/2021

PROJECT No: 500-897-LV-EF DRAWN BY: GAG/KAS/KMT
DESIGNED BY: ROM/GAG CHECKED BY: ALF/RPM/ROM
APPROVED BY

Kimley»Horn
6671 Las Vegas Boulevard South, Suite 320
Las Vegas, Nevada 89119
Tel. No.(702) 862-3600

SCALE
HORIZ: 1" = 20'
VERT: 1" = 4'
FIELD BOOK

DRAWING NO.
W-20
SHT. 25 OF 80
L-2304

LAS VEGAS BOULEVARD WATERLINE IMPROVEMENTS

User: Gerardo.Gonzalez
Path:A:\TUC_Waterlineresources\045831000_LasVegasBlvd\CADD\LAB Phase E Water Plans\24-28_WTR-W22_L1.dwg
Copyright © 2021 Kimley-Horn and Associates, Inc. The information contained herein is the property of Kimley-Horn and Associates, Inc. and is provided for the specific purpose and client for which it was prepared. Reuse of and improper reliance on this document without written authorization and adaptation by Kimley-Horn and Associates, Inc. shall be without liability to Kimley-Horn and Associates, Inc.

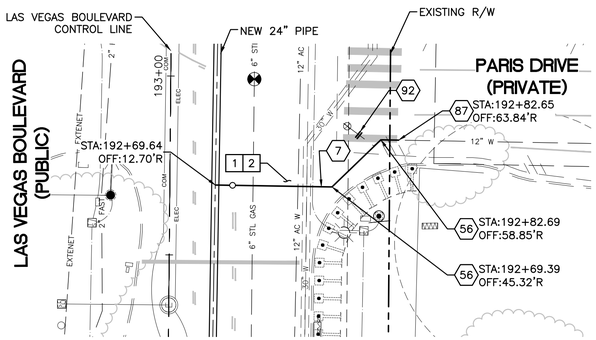

12" WATER LATERAL RECONNECTION
STA: 192+69.64
SEE DWG NO. W-6

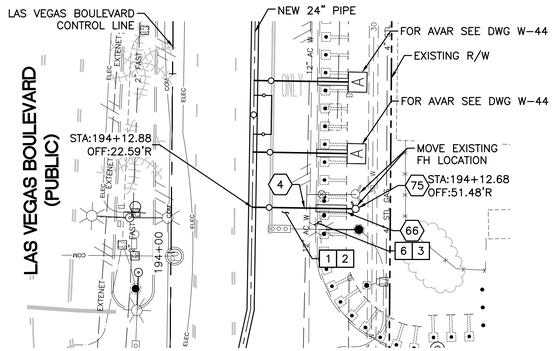

6" FIRE HYDRANT RELOCATION
STA: 194+12.88
SEE DWG NO. W-7

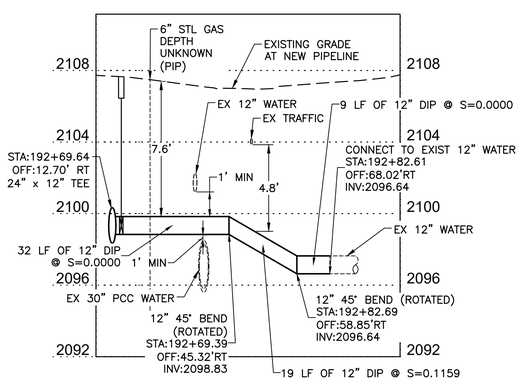

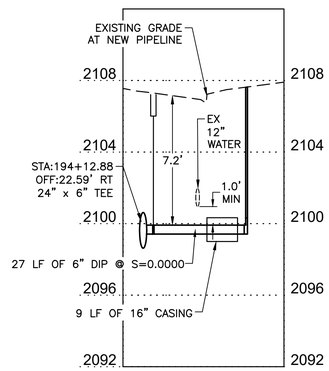

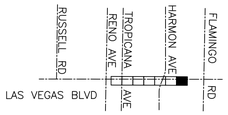

KEY MAP
NTS

CONSTRUCTION INDEX

- (4) INSTALL 6" DIP, RESTRAIN AND BOND ALL JOINTS
- (7) INSTALL 12" DIP, RESTRAIN AND BOND ALL JOINTS
- (56) INSTALL 12" X 45° BEND, RESTRAIN JOINTS
- (66) INSTALL PIPE CASING PER UDACS PLATE NOS. 22 & 23 ON DWG WD-14
- (75) INSTALL NEW FIRE HYDRANT PER UDACS PLATE NOS. 40 AND 41 ON DWGS WD-17 & WD-18
- (87) CONNECT TO EXISTING 12" PIPE WITH ENGINEER APPROVED SLEEVE COUPLING
- (92) CUT AND CAP EXISTING MAIN PIPE PER DETAIL 1 ON DWG WD-12

CONSTRUCTION NOTES

1. ALL TRENCH PER DETAILS ON DWG WD-1
2. SAWCUT AND/OR MATCH EXISTING GRADE. CONTRACTOR TO COORDINATE W/ CLARK COUNTY INSPECTOR FOR SAWCUT LOCATIONS
3. REPLACE "L" TYPE CURB AND GUTTER PER CCAUSD DWG. NO. 216
6. REPLACE SIDEWALK PER CCAUSD DWG. NO. 234

FIRE DEPARTMENT APPROVAL

BY: _____ DATE: _____

APPROVAL OF THESE PLANS SHALL NOT BE CONSTRUED TO BE A PERMIT FOR, OR AN APPROVAL OF ANY VIOLATION OF ANY OF THE PROVISIONS OF STATE OR COUNTY LAWS.

APPROVAL OF THE FIRE DEPARTMENT HAVING JURISDICTION IS REQUIRED PRIOR TO OBTAINING FINAL APPROVAL FROM THE LAS VEGAS VALLEY WATER DISTRICT.

CCWRD APPROVAL

CLARK COUNTY WATER RECLAMATION DISTRICT DATE

CCWRD PIPES NUMBER IS 21,955.
SIGNATURE ON THESE PLANS SHALL NOT BE CONSTRUED TO BE A PERMIT FOR OR THE APPROVAL OF ANY VIOLATION OF CLARK COUNTY WATER RECLAMATION DISTRICT RULES, REGULATIONS, OR DESIGN AND CONSTRUCTION STANDARDS.

LVVWD APPROVAL

APPROVED FOR CONSTRUCTION

LAS VEGAS VALLEY WATER DISTRICT PLANNING AND ENGINEERING SERVICES

PROJECT No. 139055 FIRST APPROVED DATE _____

811 know what's below Call before you dig

SAFETY ALERT Call Before You Overhead 1-702-227-2929

UNION PACIFIC RAILROAD Call Before You Dig 1-800-336-9193

Call before you UnderGround 1-702-432-5300 FREEWAY AND ARTERIAL SYSTEM OF TRANSPORTATION

NO.	REVISIONS	DATE
		APPROVED

CLARK COUNTY NEVADA

LAS VEGAS BLVD WATERLINE REPLACEMENT - TROPICANA AVE TO FLAMINGO RD (PHASE E/F)

24" WATER MAIN - LATERAL PLAN AND PROFILE STA 192+69 & STA 194+12

CLARK COUNTY, NEVADA, DEPARTMENT OF PUBLIC WORKS

PROFESSIONAL ENGINEER - STATE OF NEVADA
RAY P. MONTOYA
Exp. 12/31/2021
CIVIL
No. 025877
10/08/2021

PROJECT No: 500-897-LV-EF DRAWN BY: GAG/KAS/KMT
DESIGNED BY: ROM/GAG CHECKED BY: ALF/RPM/ROM
APPROVED BY _____

Kimley»Horn
6671 Las Vegas Boulevard South, Suite 320
Las Vegas, Nevada 89119
Tel. No.(702) 862-3600

SCALE
HORIZ: 1" = 20'
VERT: 1" = 4'
FIELD BOOK

DRAWING NO.
W-21
SHT. 26 OF 80
L-2304

LAS VEGAS BOULEVARD WATERLINE IMPROVEMENTS

User: Gerardo.Gonzalez
Path: A:\Y:\C_Water Resources\09813100D_LasVegasBlvd\CADD\WB Phase E Water Plans\23-28_WTR-W22_L1.dwg
Copyright © 2021 Kimley-Horn and Associates, Inc. The information, ideas, and designs presented herein, is the property of Kimley-Horn and Associates, Inc. and is intended for use on this project only. Reuse of and improper reliance on this document without written authorization and adaptation by Kimley-Horn and Associates, Inc. shall be without liability to Kimley-Horn and Associates, Inc.

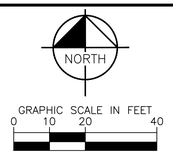

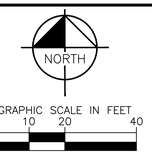

EXISTING 30" SCC PIPE DATA 1:

STEEL CYLINDER OD:	30.2092"
CYLINDER THICKNESS:	0.1046"
LINING THICKNESS:	0.75"
COATING THICKNESS:	0.75"
ROD THICKNESS: (IF APPLICABLE)	0.3125"

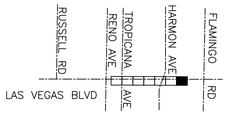

KEY MAP
NTS

CONSTRUCTION INDEX

- (4) INSTALL 6" DIP, RESTRAIN AND BOND ALL JOINTS
- (8) INSTALL 16" DIP, RESTRAIN AND BOND ALL JOINTS
- (66) INSTALL PIPE CASING PER UDACS PLATE NOS. 22 & 23 ON DWG WD-14
- (75) INSTALL NEW FIRE HYDRANT PER UDACS PLATE NOS. 40 AND 41 ON DWGS WD-17 & WD-18
- (92) CUT AND CAP EXISTING MAIN PIPE PER DETAIL 1 ON DWG WD-12
- (104) 30" X 16" TAPPING SLEEVE & VALVE PER DETAIL 2 ON DWG WD-10 & UDACS PLATE NOS. 34 & 35 ON DWGS WD-15 & WD-16

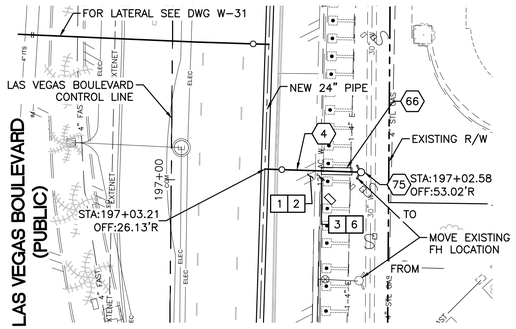

6" FIRE HYDRANT RELOCATION
STA: 197+03.21
SEE DWG NO. W-7

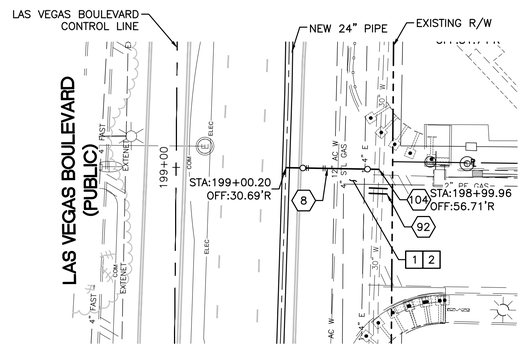

16" WATER MAIN INTERCONNECTION
STA: 199+00.20
SEE DWG NO. W-7

CONSTRUCTION NOTES

1. ALL TRENCH PER DETAILS ON DWG WD-1
2. SAWCUT AND/OR MATCH EXISTING GRADE. CONTRACTOR TO COORDINATE W/ CLARK COUNTY INSPECTOR FOR SAWCUT LOCATIONS
3. REPLACE "L" TYPE CURB AND GUTTER PER CCAUSD DWG. NO. 216
6. REPLACE SIDEWALK PER CCAUSD DWG. NO. 234

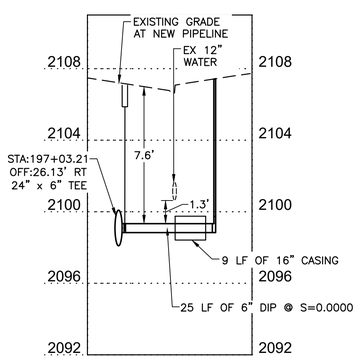

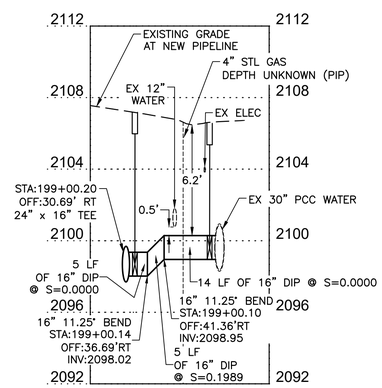

FIRE DEPARTMENT APPROVAL

BY: _____ DATE: _____

APPROVAL OF THESE PLANS SHALL NOT BE CONSTRUED TO BE A PERMIT FOR, OR AN APPROVAL OF ANY VIOLATION OF ANY OF THE PROVISIONS OF STATE OR COUNTY LAWS.

APPROVAL OF THE FIRE DEPARTMENT HAVING JURISDICTION IS REQUIRED PRIOR TO OBTAINING FINAL APPROVAL FROM THE LAS VEGAS VALLEY WATER DISTRICT.

CCWRD APPROVAL

CLARK COUNTY WATER RECLAMATION DISTRICT DATE

CCWRD PIPES NUMBER IS 21955.
SIGNATURE ON THESE PLANS SHALL NOT BE CONSTRUED TO BE A PERMIT FOR OR THE APPROVAL OF ANY VIOLATION OF CLARK COUNTY WATER RECLAMATION DISTRICT RULES, REGULATIONS, OR DESIGN AND CONSTRUCTION STANDARDS.

LVVWD APPROVAL

APPROVED FOR CONSTRUCTION

LAS VEGAS VALLEY WATER DISTRICT PLANNING AND ENGINEERING SERVICES

PROJECT No. 139055 FIRST APPROVED DATE _____

811 know what's below Call before you dig

SAFETY ALERT Call Before You Overhead 1-702-227-2929

UNION PACIFIC RAILROAD Call Before You Dig 1-800-336-9193

Call before you UnderGround 1-702-432-5300 FREEWAY AND ARTERIAL SYSTEM OF TRANSPORTATION

NO.	REVISIONS	DATE
		APPROVED

CLARK COUNTY NEVADA

LAS VEGAS BLVD WATERLINE REPLACEMENT - TROPICANA AVE TO FLAMINGO RD (PHASE E/F)

24" WATER MAIN - LATERAL PLAN AND PROFILE STA 197+03 & STA 199+00

CLARK COUNTY, NEVADA, DEPARTMENT OF PUBLIC WORKS

PROFESSIONAL ENGINEER - STATE OF NEVADA
RAY P. MONTOYA
Exp. 12/31/2021
CIVIL
No. 025877
10/08/2021

PROJECT No: 500-897-LV-EF DRAWN BY: GAG/KAS/KMT
DESIGNED BY: ROM/GAG CHECKED BY: ALF/RPM/ROM
APPROVED BY _____

Kimley»Horn
6671 Las Vegas Boulevard South, Suite 320
Las Vegas, Nevada 89119
Tel. No.(702) 862-3600

SCALE
HORIZ: 1" = 20'
VERT: 1" = 4'
FIELD BOOK

DRAWING NO.
W-22
SHT. 27 OF 80
L-2304

LAS VEGAS BOULEVARD WATERLINE IMPROVEMENTS

User: Gerardo.Gonzalez
Path: A:\TLC_Waterlineresources\08831-2000_Lasvegasblvd\CADD\LVB Phase E Water Plans\23-28_WTR-W22_L1.dwg
Any party procuring these plans is the approved of plans, is provided only for the specific purpose and client for which it was prepared. Reuse of and improper reliance on this document without written authorization and adaptation by Kimley-Horn and Associates, Inc. shall be without liability to Kimley-Horn and Associates, Inc.

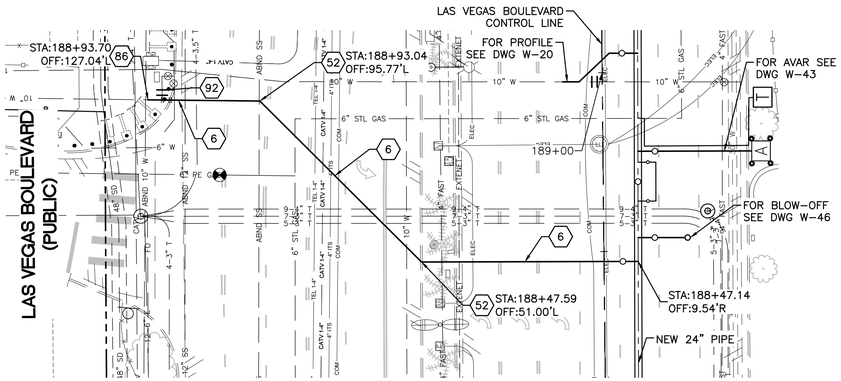

10" WATER LATERAL RECONNECTION
STA: 188+47.14
SEE DWG NO. W-6

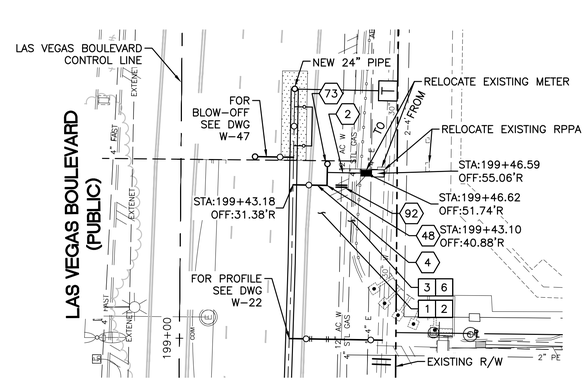

6" WATER LATERAL RECONNECTION
STA: 199+43.18
SEE DWG NO. W-7

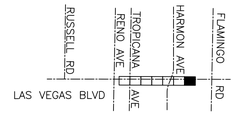

KEY MAP
NTS

CONSTRUCTION INDEX

- (2) INSTALL 1-1/2" SERVICE LINE PER UDACS PLATE NO. 4 ON DWG WD-14
- (4) INSTALL 6" DIP, RESTRAIN AND BOND ALL JOINTS
- (6) INSTALL 10" DIP, RESTRAIN AND BOND ALL JOINTS
- (48) INSTALL 6" X 90° BEND, RESTRAIN JOINTS
- (52) INSTALL 10" X 45° BEND, RESTRAIN JOINTS
- (73) INSTALL 6" BLOW-OFF ASSEMBLY PER UDACS PLATE 37 ON DWG WD-16
- (86) CONNECT TO EXISTING 10" PIPE WITH ENGINEER APPROVED SLEEVE COUPLING
- (92) CUT AND CAP EXISTING MAIN PIPE PER DETAIL 1 ON DWG WD-12

CONSTRUCTION NOTES

1. ALL TRENCH PER DETAILS ON DWG WD-1
2. SAWCUT AND/OR MATCH EXISTING GRADE. CONTRACTOR TO COORDINATE W/ CLARK COUNTY INSPECTOR FOR SAWCUT LOCATIONS
3. REPLACE "L" TYPE CURB AND GUTTER PER CCAUSD DWG. NO. 216
6. REPLACE SIDEWALK PER CCAUSD DWG. NO. 234

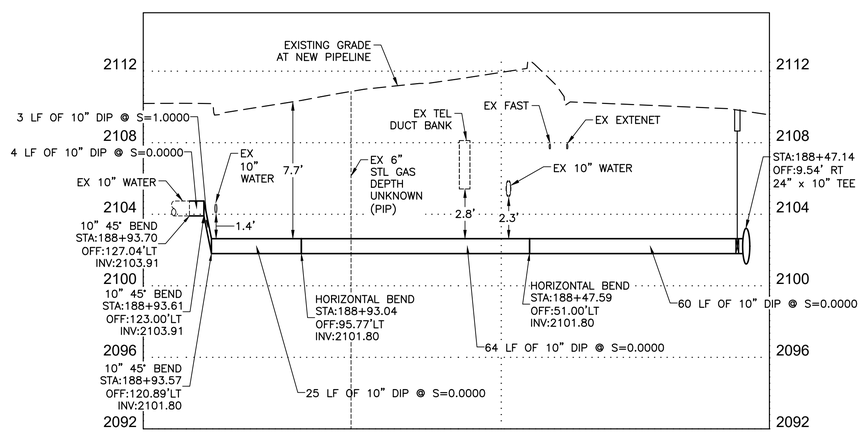

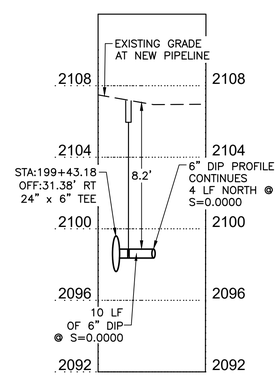

FIRE DEPARTMENT APPROVAL

BY: _____ DATE: _____

APPROVAL OF THESE PLANS SHALL NOT BE CONSTRUED TO BE A PERMIT FOR, OR AN APPROVAL OF ANY VIOLATION OF ANY OF THE PROVISIONS OF STATE OR COUNTY LAWS.

APPROVAL OF THE FIRE DEPARTMENT HAVING JURISDICTION IS REQUIRED PRIOR TO OBTAINING FINAL APPROVAL FROM THE LAS VEGAS VALLEY WATER DISTRICT.

CCWRD APPROVAL

CLARK COUNTY WATER RECLAMATION DISTRICT DATE

CCWRD PIPES NUMBER IS 21,955.
SIGNATURE ON THESE PLANS SHALL NOT BE CONSTRUED TO BE A PERMIT FOR OR THE APPROVAL OF ANY VIOLATION OF CLARK COUNTY WATER RECLAMATION DISTRICT RULES, REGULATIONS, OR DESIGN AND CONSTRUCTION STANDARDS.

LVVWD APPROVAL

APPROVED FOR CONSTRUCTION

LAS VEGAS VALLEY WATER DISTRICT PLANNING AND ENGINEERING SERVICES

PROJECT No. 139055 FIRST APPROVED DATE _____

811 know what's below Call before you dig

SAFETY ALERT Call Before You Overhead 1-702-227-2929

UNION PACIFIC RAILROAD Call Before You Dig 1-800-336-9193

Call before you UnderGround 1-702-432-5300

NO.	REVISIONS	DATE
		APPROVED

CLARK COUNTY NEVADA

LAS VEGAS BLVD WATERLINE REPLACEMENT - TROPICANA AVE TO FLAMINGO RD (PHASE E/F)

24" WATER MAIN - LATERAL PLAN AND PROFILE STA 188+47 & STA 199+43

CLARK COUNTY, NEVADA, DEPARTMENT OF PUBLIC WORKS

PROFESSIONAL ENGINEER - STATE OF NEVADA
RAY P. MONTOYA
Exp. 12/31/2021
CIVIL
No. 025877
10/08/2021

PROJECT No: 500-897-LV-EF DRAWN BY: GAG/KAS/KMT
DESIGNED BY: ROM/GAG CHECKED BY: ALF/RPM/ROM
APPROVED BY _____

Kimley»Horn
6671 Las Vegas Boulevard South, Suite 320
Las Vegas, Nevada 89119
Tel. No.(702) 862-3600

SCALE
HORIZ: 1" = 20'
VERT: 1" = 4'
FIELD BOOK

DRAWING NO.
W-23
SHT. 28 OF 80
L-2304

LAS VEGAS BOULEVARD WATERLINE IMPROVEMENTS

User: Gerardo.Gonzalez
Path: A:\TFC_WaterResources\139583.000_LasVegasBlvd\CADD\LVB Phase E Water Plans\23-28_WTR-W22_L1.dwg
Any party presented here, is the property of Kimley-Horn and Associates, Inc. It is provided only for the specific purpose and client for which it was prepared. Reuse of and improper reliance on this document without written authorization and adaptation by Kimley-Horn and Associates, Inc. shall be without liability to Kimley-Horn and Associates, Inc.

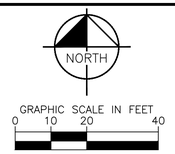

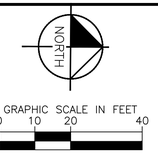

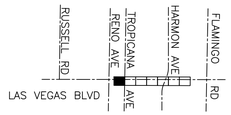

KEY MAP
NTS

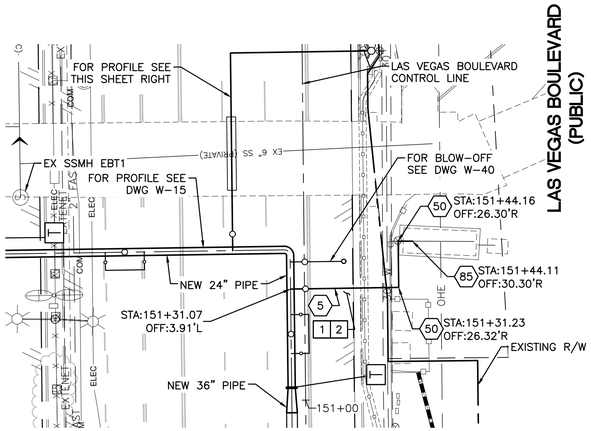

8' WATER LATERAL RECONNECTION
STA: 151+31.07
SEE DWG NO. W-1

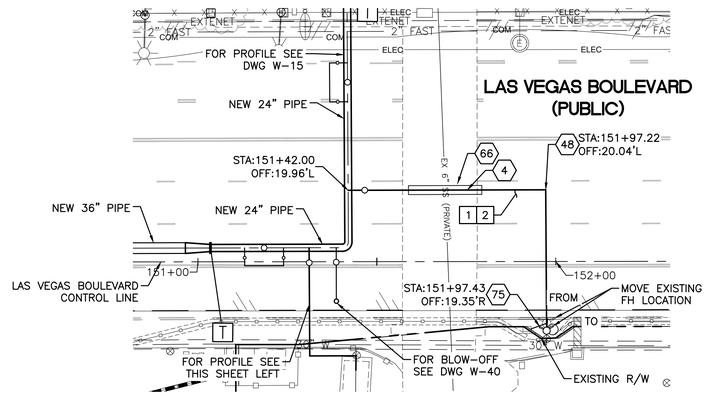

6" FIRE HYDRANT RELOCATION
STA: 151+42.00
SEE DWG NO. W-15

CONSTRUCTION INDEX

- 4 INSTALL 6" DIP, RESTRAIN AND BOND ALL JOINTS
- 5 INSTALL 8" DIP, RESTRAIN AND BOND ALL JOINTS
- 48 INSTALL 6" X 90° BEND, RESTRAIN JOINTS
- 50 INSTALL 8" X 90° BEND, RESTRAIN JOINTS
- 66 INSTALL PIPE CASING PER UDACS PLATE NOS. 22 & 23 ON DWG WD-14
- 75 INSTALL NEW FIRE HYDRANT PER UDACS PLATE NOS. 40 AND 41 ON DWGS WD-17 & WD-18
- 85 CONNECT TO EXISTING 8" PIPE WITH ENGINEER APPROVED SLEEVE COUPLING

CONSTRUCTION NOTES

- 1 ALL TRENCH PER DETAILS ON DWG WD-1
- 2 SAWCUT AND/OR MATCH EXISTING GRADE. CONTRACTOR TO COORDINATE W/ CLARK COUNTY INSPECTOR FOR SAWCUT LOCATIONS
- 48 EXISTING SEWER MUST BE PROTECTED IN PLACE PER DCSWCS

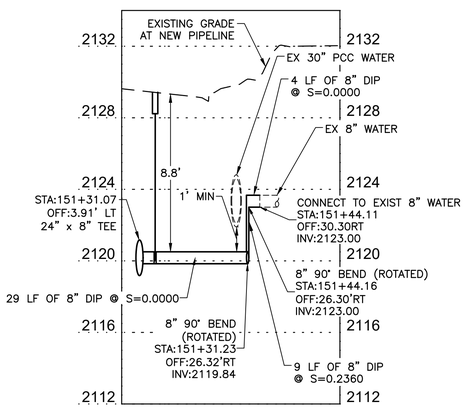

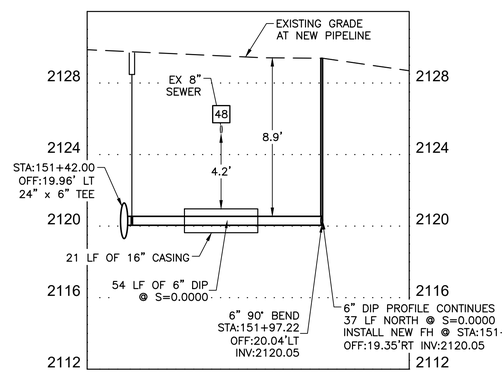

FIRE DEPARTMENT APPROVAL

BY: _____ DATE: _____

APPROVAL OF THESE PLANS SHALL NOT BE CONSTRUED TO BE A PERMIT FOR, OR AN APPROVAL OF ANY VIOLATION OF ANY OF THE PROVISIONS OF STATE OR COUNTY LAWS.

APPROVAL OF THE FIRE DEPARTMENT HAVING JURISDICTION IS REQUIRED PRIOR TO OBTAINING FINAL APPROVAL FROM THE LAS VEGAS VALLEY WATER DISTRICT.

CCWRD APPROVAL

CLARK COUNTY WATER RECLAMATION DISTRICT DATE

CCWRD PIPES NUMBER IS 21955.
SIGNATURE ON THESE PLANS SHALL NOT BE CONSTRUED TO BE A PERMIT FOR OR THE APPROVAL OF ANY VIOLATION OF CLARK COUNTY WATER RECLAMATION DISTRICT RULES, REGULATIONS, OR DESIGN AND CONSTRUCTION STANDARDS.

LVVWD APPROVAL

APPROVED FOR CONSTRUCTION

LAS VEGAS VALLEY WATER DISTRICT PLANNING AND ENGINEERING SERVICES

PROJECT No. 139055 FIRST APPROVED DATE _____

811 know what's below Call before you dig

SAFETY ALERT Call Before You Overhead 1-702-227-2929

UNION PACIFIC RAILROAD Call Before You Dig 1-800-336-9193

Call before you UnderGround 1-702-432-5300

NO.	REVISIONS	DATE
		APPROVED

CLARK COUNTY NEVADA

LAS VEGAS BLVD WATERLINE REPLACEMENT - TROPICANA AVE TO FLAMINGO RD (PHASE E/F)

24" WATER MAIN - LATERAL PLAN AND PROFILE STA 151+31 & STA 151+42

CLARK COUNTY, NEVADA, DEPARTMENT OF PUBLIC WORKS

PROFESSIONAL ENGINEER - STATE OF NEVADA
RAY P. MONTOYA
Exp. 12/31/2021
CIVIL
No. 025877
10/08/2021

PROJECT No: 500-897-LV-EF DRAWN BY: GAG/KAS/KMT
DESIGNED BY: ROM/GAG CHECKED BY: ALF/RPM/ROM
APPROVED BY _____

Kimley»Horn
6671 Las Vegas Boulevard South, Suite 320
Las Vegas, Nevada 89119
Tel. No.(702) 862-3600

SCALE
HORIZ: 1" = 20'
VERT: 1" = 4'
FIELD BOOK

DRAWING NO.
W-24
SHT. 29 OF 80
L-2304

LAS VEGAS BOULEVARD WATERLINE IMPROVEMENTS

Any reproduction or distribution of this document without written authorization and adaptation by Kimley-Horn and Associates, Inc. shall be without liability to Kimley-Horn and Associates, Inc. Reuse of and improper reliance on this document by persons other than those authorized or intended is prohibited.

User: Gerardo.Gonzalez
Path: K:\TUC_Water\Resources\095813000_Lasvegasblvd\CADD\LVB Phase E Water Plans\17-19_C12-C14_L1.dwg

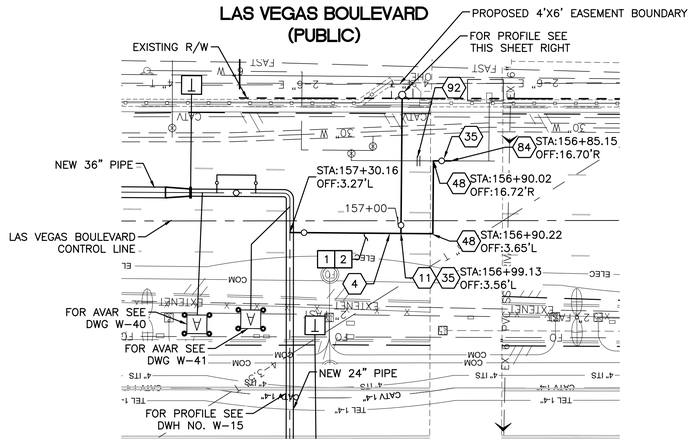

6" WATER LATERAL RECONNECTION
STA: 157+30.16
SEE DWG NO. W-15

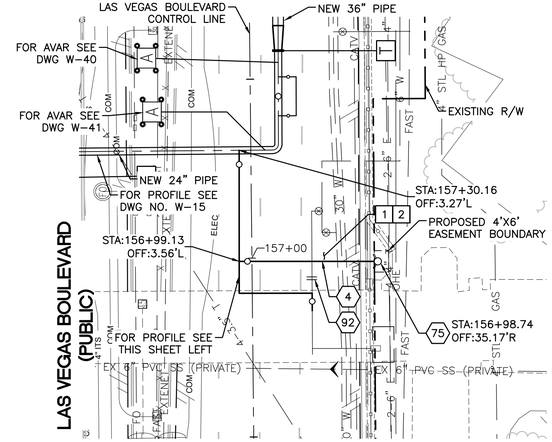

6" FIRE HYDRANT RELOCATION (CONT FROM LEFT)
STA: 156+99.13
SEE DWG NO. W-15

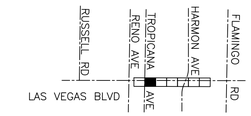

KEY MAP
NTS

CONSTRUCTION INDEX

- (4) INSTALL 6" DIP, RESTRAIN AND BOND ALL JOINTS
- (11) INSTALL 6" X 6" TEE, RESTRAIN JOINTS
- (35) INSTALL 6" GATE VALVE PER DETAIL 2 ON DWG WD-11 & UDACS PLT NO. 39 ON DWG WD-17
- (48) INSTALL 6" X 90° BEND, RESTRAIN JOINTS
- (75) INSTALL NEW FIRE HYDRANT PER UDACS PLATE NOS. 40 AND 41 ON DWGS WD-17 & WD-18
- (84) CONNECT TO EXISTING 6" PIPE WITH ENGINEER APPROVED SLEEVE COUPLING
- (92) CUT AND CAP EXISTING MAIN PIPE PER DETAIL 1 ON DWG WD-12

CONSTRUCTION NOTES

1. ALL TRENCH PER DETAILS ON DWG WD-1
2. SAWCUT AND/OR MATCH EXISTING GRADE. CONTRACTOR TO COORDINATE W/ CLARK COUNTY INSPECTOR FOR SAWCUT LOCATIONS

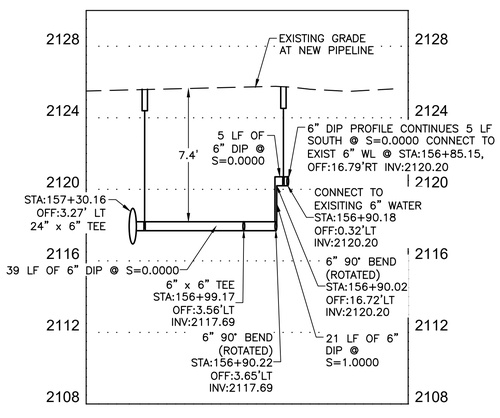

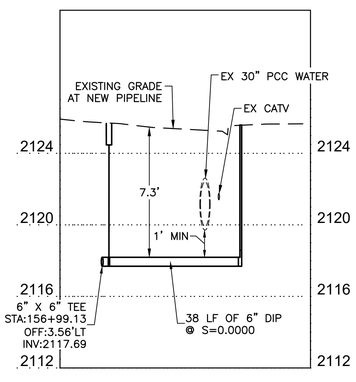

FIRE DEPARTMENT APPROVAL

BY: _____ DATE: _____

APPROVAL OF THESE PLANS SHALL NOT BE CONSTRUED TO BE A PERMIT FOR, OR AN APPROVAL OF ANY VIOLATION OF ANY OF THE PROVISIONS OF STATE OR COUNTY LAWS.

APPROVAL OF THE FIRE DEPARTMENT HAVING JURISDICTION IS REQUIRED PRIOR TO OBTAINING FINAL APPROVAL FROM THE LAS VEGAS VALLEY WATER DISTRICT.

CCWRD APPROVAL

CLARK COUNTY WATER RECLAMATION DISTRICT DATE

CCWRD PIPES NUMBER IS 21955.
SIGNATURE ON THESE PLANS SHALL NOT BE CONSTRUED TO BE A PERMIT FOR OR THE APPROVAL OF ANY VIOLATION OF CLARK COUNTY WATER RECLAMATION DISTRICT RULES, REGULATIONS, OR DESIGN AND CONSTRUCTION STANDARDS.

LVVWD APPROVAL

APPROVED FOR CONSTRUCTION

LAS VEGAS VALLEY WATER DISTRICT PLANNING AND ENGINEERING SERVICES

PROJECT No. 139055 FIRST APPROVED DATE _____

811 know what's below Call before you dig

SAFETY ALERT Call Before You Overhead 1-702-227-2929

UNION PACIFIC RAILROAD Call Before You Dig 1-800-336-9193

Call before you UnderGround 1-702-432-5300

NO.	REVISIONS	DATE
		APPROVED

CLARK COUNTY NEVADA

LAS VEGAS BLVD WATERLINE REPLACEMENT - TROPICANA AVE TO FLAMINGO RD (PHASE E/F)

24" WATER MAIN - LATERAL PLAN AND PROFILE STA 157+30 & STA 156+99

CLARK COUNTY, NEVADA, DEPARTMENT OF PUBLIC WORKS

PROFESSIONAL ENGINEER - STATE OF NEVADA
RAY P. MONTOYA
Exp. 12/31/2021
CIVIL
No. 025877
10/08/2021

PROJECT No: 500-897-LV-EF DRAWN BY: GAG/KAS/KMT
DESIGNED BY: ROM/GAG CHECKED BY: ALF/RPM/ROM
APPROVED BY _____

Kimley»Horn
6671 Las Vegas Boulevard South, Suite 320
Las Vegas, Nevada 89119 Tel. No.(702) 862-3600

SCALE
HORIZ: 1" = 20'
VERT: 1" = 4'
FIELD BOOK

DRAWING NO.
W-25
SHT. 30 OF 80
L-2304

LAS VEGAS BOULEVARD WATERLINE IMPROVEMENTS

User: Gerardo.Gonzalez
Path: K:\TUC_Water\Resources\095313000_Lasvegasblvd\CADD\LAB Phase E Water Plans\17-19_C12-C14_LT.dwg
Copyright © 2021 Kimley-Horn and Associates, Inc. This document is instrument of service, is copyrighted property of Kimley-Horn and Associates, Inc. and is intended only for the specific purpose and client for which it was prepared. Reuse of and improper reliance on this document without written authorization and adaptation by Kimley-Horn and Associates, Inc. shall be without liability to Kimley-Horn and Associates, Inc.

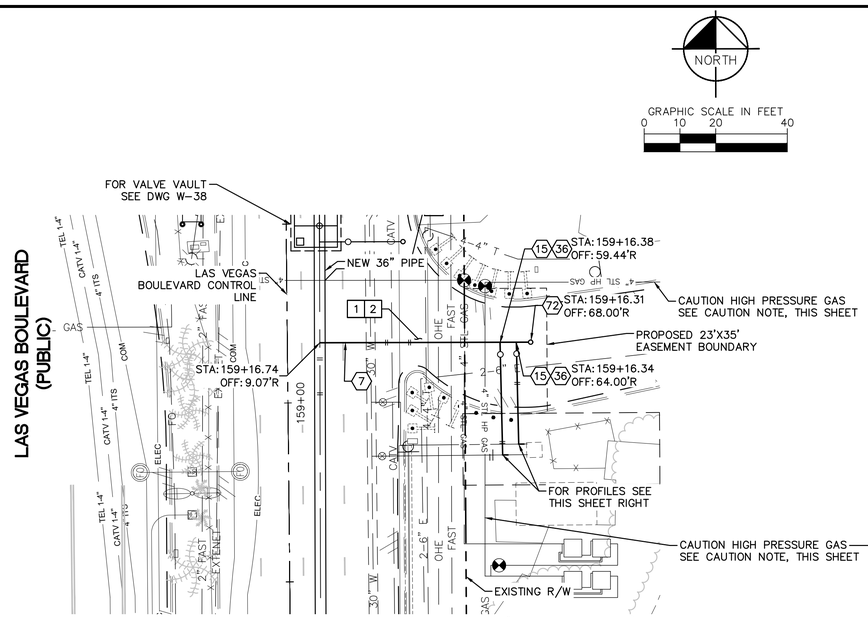

12" WATER LATERAL RECONNECTION (CONT RIGHT)
STA: 159+16.74
SEE DWG NO. W-2

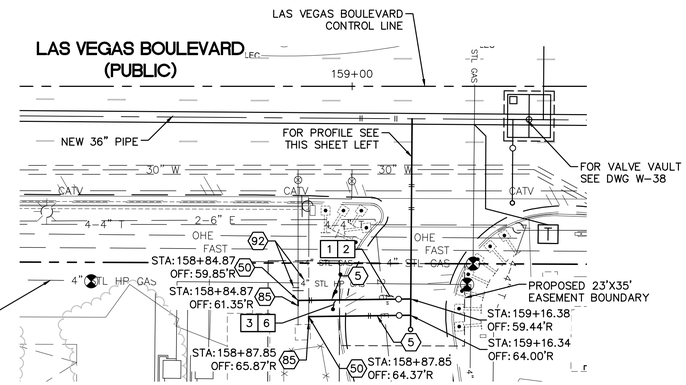

8" WATER LATERAL RECONNECTION (CONT FROM LEFT)
STA: 159+16.34 AND 159+16.38
SEE DWG NO. W-2

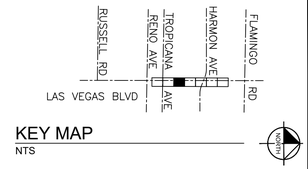

KEY MAP
NTS

CONSTRUCTION INDEX

- (5) INSTALL 8" DIP, RESTRAIN AND BOND ALL JOINTS
- (7) INSTALL 12" DIP, RESTRAIN AND BOND ALL JOINTS
- (15) INSTALL 12" X 8" TEE, RESTRAIN JOINTS
- (36) INSTALL 8" GATE VALVE PER DETAIL 2 ON DWG WD-11 & UDACS PLT NO. 39 ON DWG WD-17
- (50) INSTALL 8" X 90° BEND, RESTRAIN JOINTS
- (72) INSTALL 2" BLOW-OFF ASSEMBLY PER UDACS PLATE 36 ON DWG WD-16
- (85) CONNECT TO EXISTING 8" PIPE WITH ENGINEER APPROVED SLEEVE COUPLING
- (92) CUT AND CAP EXISTING MAIN PIPE PER DETAIL 1 ON DWG WD-12

CONSTRUCTION NOTES

1. ALL TRENCH PER DETAILS ON DWG WD-1
2. SAWCUT AND/OR MATCH EXISTING GRADE. CONTRACTOR TO COORDINATE W/ CLARK COUNTY INSPECTOR FOR SAWCUT LOCATIONS
3. REPLACE "L" TYPE CURB AND GUTTER PER CCAUSD DWG. NO. 216
6. REPLACE SIDEWALK PER CCAUSD DWG. NO. 234

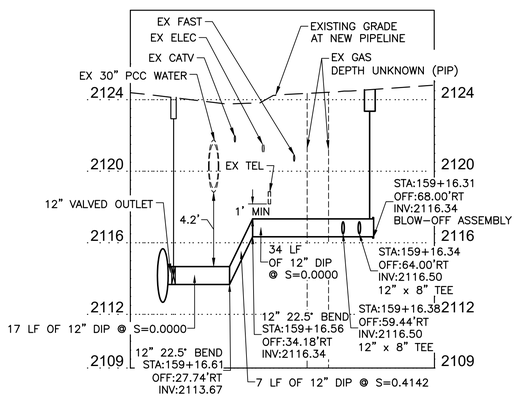

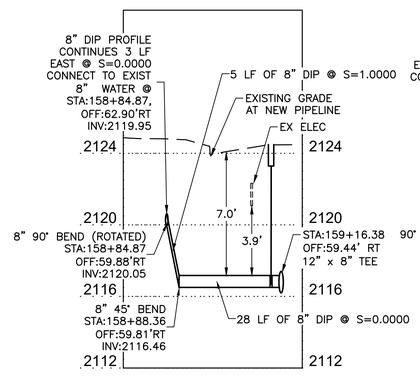

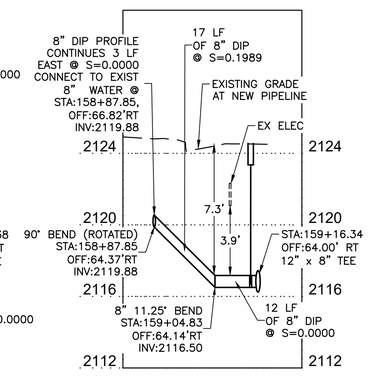

CAUTION: HIGH PRESSURE GAS!!
CALL SOUTHWEST GAS AT 702-278-8451 FOR STANDBY WHEN EXCAVATING OVER OR NEAR HIGH PRESSURE GAS LINES 48 HOURS PRIOR TO CONSTRUCTION

FIRE DEPARTMENT APPROVAL

BY: _____ DATE: _____

APPROVAL OF THESE PLANS SHALL NOT BE CONSTRUED TO BE A PERMIT FOR, OR AN APPROVAL OF ANY VIOLATION OF ANY OF THE PROVISIONS OF STATE OR COUNTY LAWS.

APPROVAL OF THE FIRE DEPARTMENT HAVING JURISDICTION IS REQUIRED PRIOR TO OBTAINING FINAL APPROVAL FROM THE LAS VEGAS VALLEY WATER DISTRICT.

CCWRD APPROVAL

CLARK COUNTY WATER RECLAMATION DISTRICT DATE

CCWRD PIPES NUMBER IS 21,955.
SIGNATURE ON THESE PLANS SHALL NOT BE CONSTRUED TO BE A PERMIT FOR OR THE APPROVAL OF ANY VIOLATION OF CLARK COUNTY WATER RECLAMATION DISTRICT RULES, REGULATIONS, OR DESIGN AND CONSTRUCTION STANDARDS.

LVVWD APPROVAL

APPROVED FOR CONSTRUCTION

LAS VEGAS VALLEY WATER DISTRICT PLANNING AND ENGINEERING SERVICES

PROJECT No. 139055 FIRST APPROVED DATE _____

811 know what's below Call before you dig

SAFETY ALERT Call Before You Overhead 1-702-227-2929

UNION PACIFIC RAILROAD Call Before You Dig 1-800-336-9193

Call before you UnderGround 1-702-492-5300

NO.	REVISIONS	DATE
		APPROVED

CLARK COUNTY NEVADA

LAS VEGAS BLVD WATERLINE REPLACEMENT - TROPICANA AVE TO FLAMINGO RD (PHASE E/F)

36" WATER MAIN - LATERAL PLAN AND PROFILE STA STA 159+16

CLARK COUNTY, NEVADA, DEPARTMENT OF PUBLIC WORKS

PROFESSIONAL ENGINEER - STATE OF NEVADA
RAY P. MONTOYA
Exp. 12/31/2021
CIVIL
No. 025817
10/08/2021

PROJECT No: 500-897-LV-EF DRAWN BY: GAG/KAS/KMT
DESIGNED BY: ROM/GAG CHECKED BY: ALF/RPM/ROM
APPROVED BY

Kimley»Horn
6671 Las Vegas Boulevard South, Suite 320
Las Vegas, Nevada 89119
Tel. No.(702) 862-3600

SCALE
HORIZ: 1" = 20'
VERT: 1" = 4'
FIELD BOOK

DRAWING NO.
W-26
SHT. 31 OF 80
L-2304

LAS VEGAS BOULEVARD WATERLINE IMPROVEMENTS

User: Gerardo.Gonzalez
Path: K:\TUC_Waterresources\065813000_Lasvegasblvd\CADD\WD Phase E Water Plans\20-23_C15-C18_LT.dwg
Kimley-Horn and Associates, Inc. shall be without liability to Kimley-Horn and Associates, Inc. Reuse of and improper reliance on this document without written authorization and adaptation by Kimley-Horn and Associates, Inc. shall be without liability to Kimley-Horn and Associates, Inc.

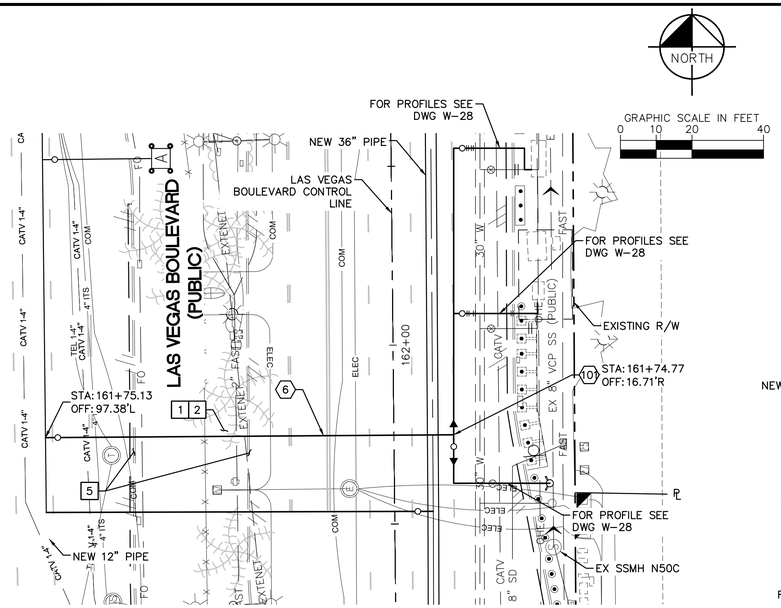

10" WATER LATERAL RECONNECTION (CONT RIGHT)
STA: 161+75.13
SEE DWG NO. W-10

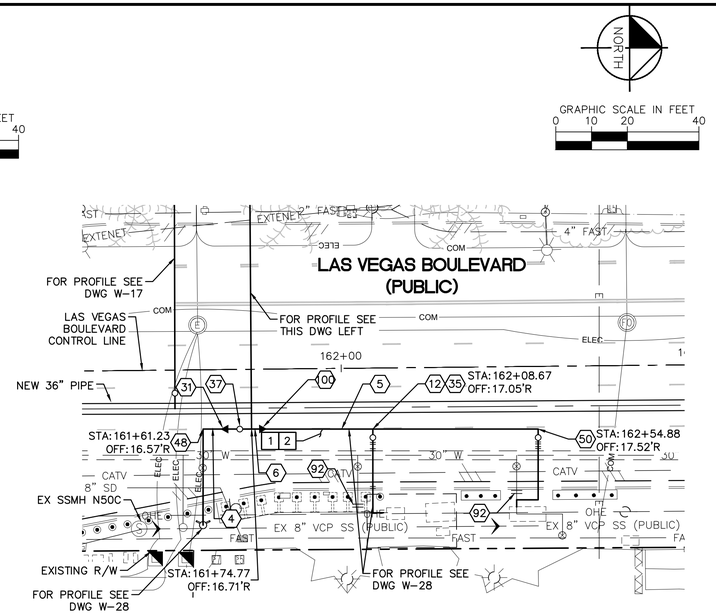

8" WATER LATERAL RECONNECTION (CONT FROM LEFT)
(CONT TO W-28)
STA: 161+74.77
SEE DWG NO. W-10

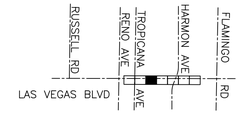

KEY MAP
NTS

CONSTRUCTION INDEX

- (4) INSTALL 6" DIP, RESTRAIN AND BOND ALL JOINTS
- (5) INSTALL 8" DIP, RESTRAIN AND BOND ALL JOINTS
- (6) INSTALL 10" DIP, RESTRAIN AND BOND ALL JOINTS
- (12) INSTALL 8" X 6" TEE, RESTRAIN JOINTS
- (31) INSTALL 10" X 6" REDUCER, RESTRAIN JOINTS
- (35) INSTALL 6" GATE VALVE PER DETAIL 2 ON DWG WD-11 & UDACS PLT NO. 39 ON DWG WD-17
- (37) INSTALL 10" GATE VALVE PER DETAIL 2 ON DWG WD-11 & UDACS PLT NO. 39 ON DWG WD-17
- (48) INSTALL 6" X 90° BEND, RESTRAIN JOINTS
- (50) INSTALL 8" X 90° BEND, RESTRAIN JOINTS
- (92) CUT AND CAP EXISTING MAIN PIPE PER DETAIL 1 ON DWG WD-12
- (100) INSTALL 10" X 8" REDUCER, RESTRAIN JOINTS
- (101) INSTALL 10" X 10" TEE, RESTRAIN JOINTS

CONSTRUCTION NOTES

1. ALL TRENCH PER DETAILS ON DWG WD-1
2. SAWCUT AND/OR MATCH EXISTING GRADE. CONTRACTOR TO COORDINATE W/ CLARK COUNTY INSPECTOR FOR SAWCUT LOCATIONS
5. REPLACE "L" TYPE ISLAND CURB PER CCAUSD DWG. NO. 219

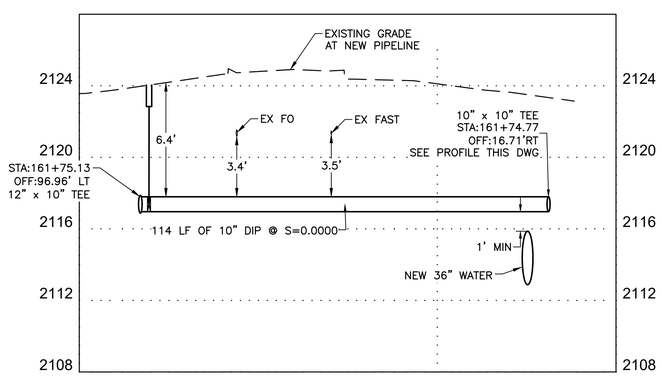

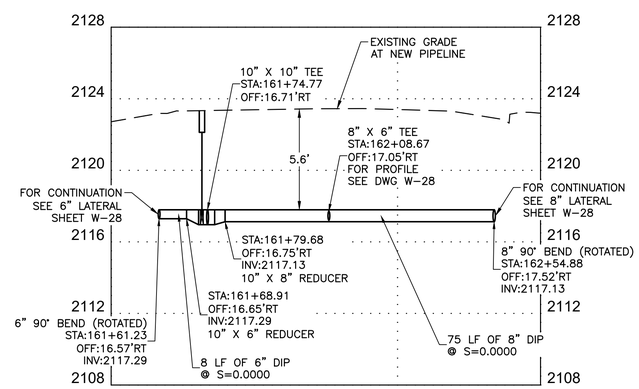

FIRE DEPARTMENT APPROVAL

BY: _____ DATE: _____

APPROVAL OF THESE PLANS SHALL NOT BE CONSTRUED TO BE A PERMIT FOR, OR AN APPROVAL OF ANY VIOLATION OF ANY OF THE PROVISIONS OF STATE OR COUNTY LAWS.

APPROVAL OF THE FIRE DEPARTMENT HAVING JURISDICTION IS REQUIRED PRIOR TO OBTAINING FINAL APPROVAL FROM THE LAS VEGAS VALLEY WATER DISTRICT.

CCWRD APPROVAL

CLARK COUNTY WATER RECLAMATION DISTRICT DATE

CCWRD PIPES NUMBER IS 21955
SIGNATURE ON THESE PLANS SHALL NOT BE CONSTRUED TO BE A PERMIT FOR OR THE APPROVAL OF ANY VIOLATION OF CLARK COUNTY WATER RECLAMATION DISTRICT RULES, REGULATIONS, OR DESIGN AND CONSTRUCTION STANDARDS.

LVVWD APPROVAL

APPROVED FOR CONSTRUCTION

LAS VEGAS VALLEY WATER DISTRICT PLANNING AND ENGINEERING SERVICES

PROJECT No. 139055 FIRST APPROVED DATE _____

811 know what's below Call before you dig

SAFETY ALERT Call Before You Overhead 1-702-227-2929

UNION PACIFIC RAILROAD Call Before You Dig 1-800-336-9193

Call before you UnderGround 1-702-432-5300

NO.	REVISIONS	DATE
		APPROVED

CLARK COUNTY NEVADA

LAS VEGAS BLVD WATERLINE REPLACEMENT - TROPICANA AVE TO FLAMINGO RD (PHASE E/F)

12" WATER MAIN - LATERAL PLAN AND PROFILE STA 161+75 & STA 161+74

CLARK COUNTY, NEVADA, DEPARTMENT OF PUBLIC WORKS

PROFESSIONAL ENGINEER - STATE OF NEVADA
RAY P. MONTOYA
Exp. 12/31/2021
CIVIL
No. 025877
10/08/2021

PROJECT No: 500-897-LV-EF
DESIGNED BY: ROM/GAG
DRAWN BY: GAG/KAS/KMT
CHECKED BY: ALF/RPM/ROM
APPROVED BY _____

Kimley»Horn
6671 Las Vegas Boulevard South, Suite 320
Las Vegas, Nevada 89119
Tel. No.(702) 862-3600

SCALE
HORIZ: 1" = 20'
VERT: 1" = 4'
FIELD BOOK

DRAWING NO.
W-27
SHT. 32 OF 80
L-2304

LAS VEGAS BOULEVARD WATERLINE IMPROVEMENTS

User: Gerardo.Gonzalez
Path:K:\TUC_WaterResources\058313000_LasVegasBlvd\CADD\LVB Phase E Water Plans\20-23_C15-C18_L1.dwg
Kimley-Horn and Associates, Inc. shall not be responsible for any modifications made to this document without written authorization and adaptation by Kimley-Horn and Associates, Inc. shall be without liability to Kimley-Horn and Associates, Inc.
Reuse of and improper reliance on this document without written authorization and adaptation by Kimley-Horn and Associates, Inc. shall be without liability to Kimley-Horn and Associates, Inc.

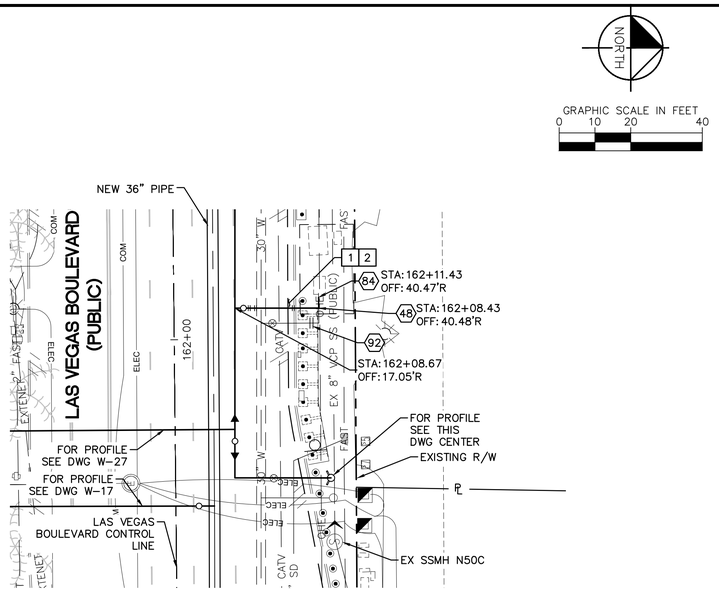

6" WATER LATERAL RECONNECTION (CONT FROM W-27)
STA: 162+08.67
SEE DWG NO. W-10

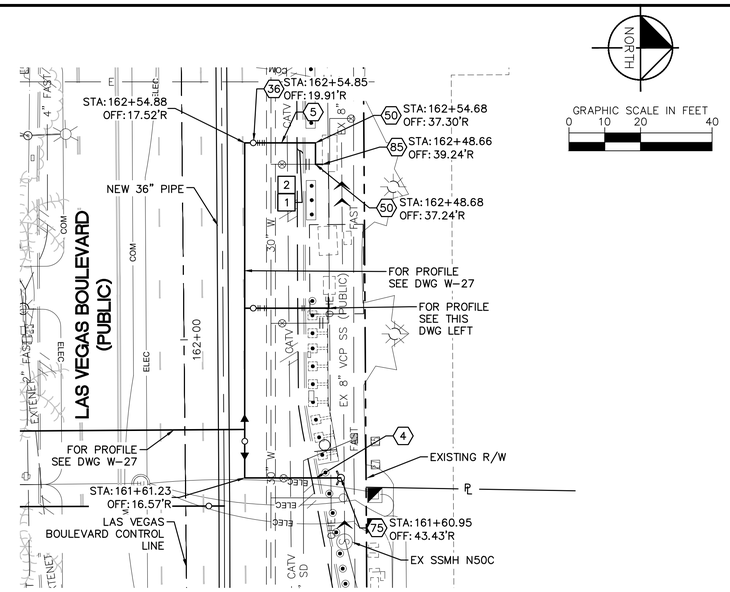

6" AND 8" LATERAL RECONNECTION
(CONT FROM W-27)
STA: 161+61.23 AND 162+54.88
SEE DWG NO. W-10

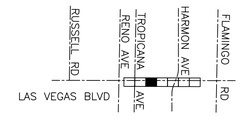

KEY MAP
NTS

CONSTRUCTION INDEX

- (4) INSTALL 6" DIP, RESTRAIN ALL JOINTS
- (5) INSTALL 8" DIP, RESTRAIN ALL JOINTS
- (36) INSTALL 8" GATE VALVE PER DETAIL 2 ON DWG WD-11 & UDACS PLT NO. 39 ON DWG WD-17
- (48) INSTALL 6" X 90° BEND, RESTRAIN JOINTS
- (50) INSTALL 8" X 90° BEND, RESTRAIN JOINTS
- (75) INSTALL NEW FIRE HYDRANT PER UDACS PLATE NOS. 40 AND 41 ON DWGS WD-17 & WD-18
- (84) CONNECT TO EXISTING 6" PIPE WITH ENGINEER APPROVED SLEEVE COUPLING
- (85) CONNECT TO EXISTING 8" PIPE WITH ENGINEER APPROVED SLEEVE COUPLING
- (92) CUT AND CAP EXISTING MAIN PIPE PER DETAIL 1 ON DWG WD-12

CONSTRUCTION NOTES

1. ALL TRENCH PER DETAILS ON DWG WD-1
2. SAWCUT AND/OR MATCH EXISTING GRADE. CONTRACTOR TO COORDINATE W/ CLARK COUNTY INSPECTOR FOR SAWCUT LOCATIONS

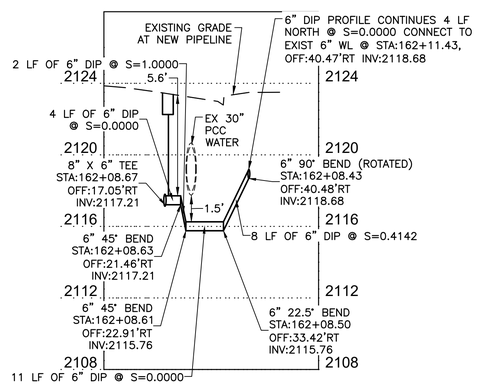

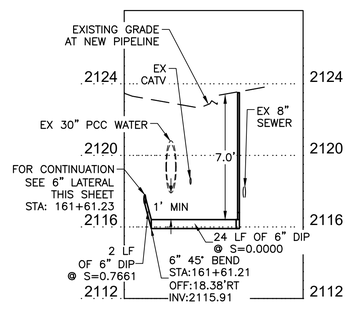

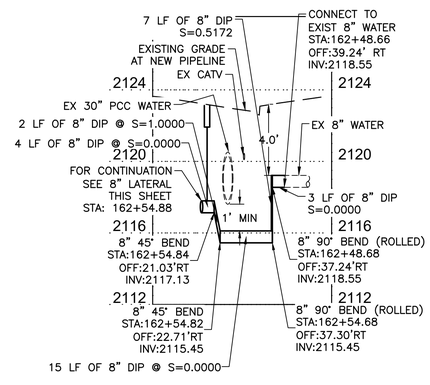

FIRE DEPARTMENT APPROVAL

BY: _____ DATE: _____

APPROVAL OF THESE PLANS SHALL NOT BE CONSTRUED TO BE A PERMIT FOR, OR AN APPROVAL OF ANY VIOLATION OF ANY OF THE PROVISIONS OF STATE OR COUNTY LAWS.

APPROVAL OF THE FIRE DEPARTMENT HAVING JURISDICTION IS REQUIRED PRIOR TO OBTAINING FINAL APPROVAL FROM THE LAS VEGAS VALLEY WATER DISTRICT.

CCWRD APPROVAL

CLARK COUNTY WATER RECLAMATION DISTRICT DATE

CCWRD PIPES NUMBER IS 21955.
SIGNATURE ON THESE PLANS SHALL NOT BE CONSTRUED TO BE A PERMIT FOR OR THE APPROVAL OF ANY VIOLATION OF CLARK COUNTY WATER RECLAMATION DISTRICT RULES, REGULATIONS, OR DESIGN AND CONSTRUCTION STANDARDS.

LVVWD APPROVAL

APPROVED FOR CONSTRUCTION

LAS VEGAS VALLEY WATER DISTRICT PLANNING AND ENGINEERING SERVICES

PROJECT No. 139055 FIRST APPROVED DATE _____

811 know what's below Call before you dig

SAFETY ALERT Call Before You Overhead 1-702-227-2929

UNION PACIFIC RAILROAD Call Before You Dig 1-800-336-9193

Call before you UnderGround 1-702-432-5300

NO.	REVISIONS	DATE
		APPROVED

CLARK COUNTY NEVADA

LAS VEGAS BLVD WATERLINE REPLACEMENT - TROPICANA AVE TO FLAMINGO RD (PHASE E/F)

12" WATER MAIN - LATERAL PLAN AND PROFILE STA 162+08 & STA 161+61 & STA 162+54

CLARK COUNTY, NEVADA, DEPARTMENT OF PUBLIC WORKS

PROFESSIONAL ENGINEER - STATE OF NEVADA
RAY P. MONTOYA
Exp. 12/31/2021
CIVIL
No. 025877
10/08/2021

PROJECT No: 500-897-LV-EF
DESIGNED BY: ROM/GAG
APPROVED BY
DRAWN BY: GAG/KAS/KMT
CHECKED BY: ALF/RPM/ROM

Kimley»Horn
6671 Las Vegas Boulevard South, Suite 320
Las Vegas, Nevada 89119
Tel. No.(702) 862-3600

SCALE
HORIZ: 1" = 20'
VERT: 1" = 4'
FIELD BOOK

DRAWING NO.
W-28
SHT. 33 OF 80
L-2304

LAS VEGAS BOULEVARD WATERLINE IMPROVEMENTS

User: Gerardo.Gonzalez
Path: K:\TUC_WaterResources\068513000_LasVegasBlvd\CADD\LVB Phase E Water Plans\20-23_C15-C18_L1.dwg
Kimley-Horn and Associates, Inc. makes no representations or warranties, and assumes no responsibility for any unauthorized alterations, or any reuse or modifications made to this document without written authorization and adaptation by Kimley-Horn and Associates, Inc. shall be without liability to Kimley-Horn and Associates, Inc.

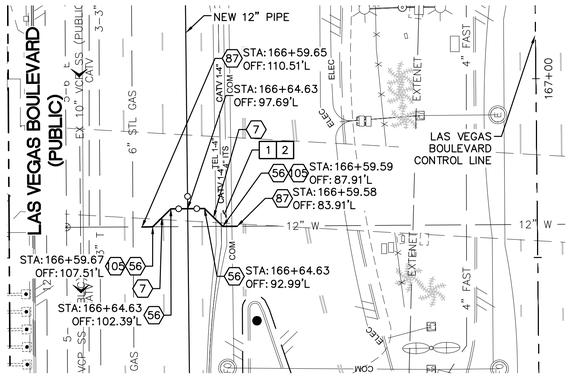

12" WATER LATERAL RECONNECTION
STA: 166+64.63
SEE DWG NO. W-10

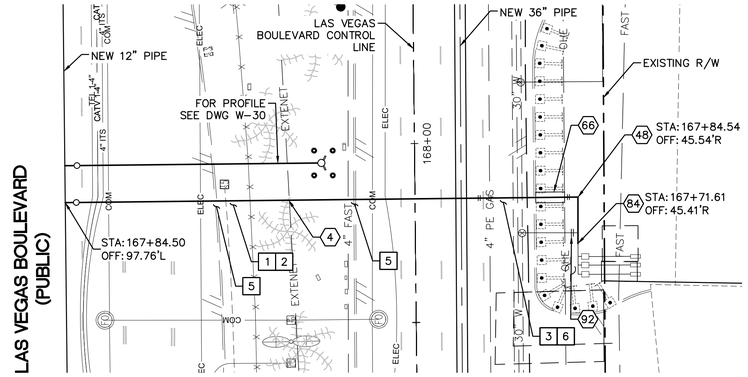

6" WATER LATERAL RECONNECTION
STA: 167+84.50
SEE DWG NO. W-10

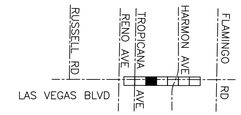

KEY MAP
NTS

CONSTRUCTION INDEX

- (4) INSTALL 6" DIP, RESTRAIN ALL JOINTS
- (7) INSTALL 12" DIP, RESTRAIN ALL JOINTS
- (48) INSTALL 6" X 90° BEND, RESTRAIN JOINTS
- (56) INSTALL 12" X 45° BEND, RESTRAIN JOINTS
- (66) INSTALL PIPE CASING PER UDACS PLATE NOS. 22 & 23 ON DWG WD-14
- (84) CONNECT TO EXISTING 6" PIPE WITH ENGINEER APPROVED SLEEVE COUPLING
- (87) CONNECT TO EXISTING 12" PIPE WITH ENGINEER APPROVED SLEEVE COUPLING
- (92) CUT AND CAP EXISTING MAIN PIPE PER DETAIL 1 ON DWG WD-12
- (105) INSTALL THRUST BLOCK PER UDACS PLATE NO. 31

CONSTRUCTION NOTES

1. ALL TRENCH PER DETAILS ON DWG WD-1
2. SAWCUT AND/OR MATCH EXISTING GRADE. CONTRACTOR TO COORDINATE W/ CLARK COUNTY INSPECTOR FOR SAWCUT LOCATIONS
3. REPLACE "L" TYPE CURB AND GUTTER PER CCAUSD DWG. NO. 216
5. REPLACE "L" TYPE ISLAND CURB PER CCAUSD DWG. NO. 219
6. REPLACE SIDEWALK PER CCAUSD DWG. NO. 234

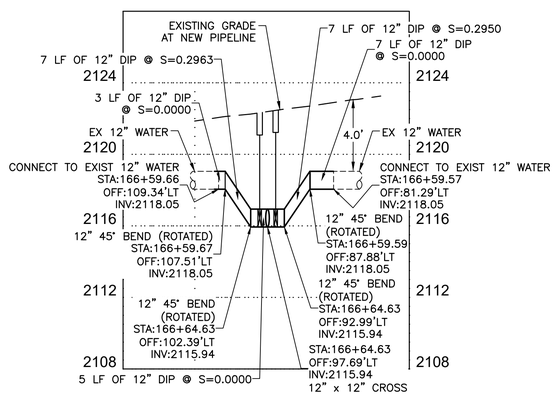

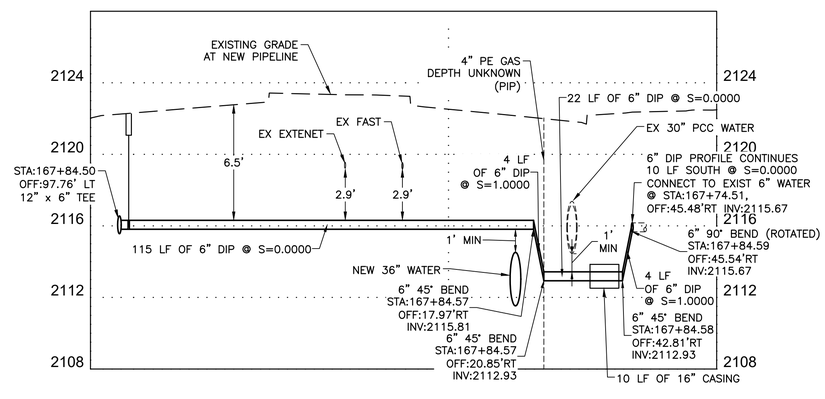

FIRE DEPARTMENT APPROVAL

BY: _____ DATE: _____

APPROVAL OF THESE PLANS SHALL NOT BE CONSTRUED TO BE A PERMIT FOR, OR AN APPROVAL OF ANY VIOLATION OF ANY OF THE PROVISIONS OF STATE OR COUNTY LAWS.

APPROVAL OF THE FIRE DEPARTMENT HAVING JURISDICTION IS REQUIRED PRIOR TO OBTAINING FINAL APPROVAL FROM THE LAS VEGAS VALLEY WATER DISTRICT.

CCWRD APPROVAL

CLARK COUNTY WATER RECLAMATION DISTRICT DATE

CCWRD PIPES NUMBER IS 21,955.
SIGNATURE ON THESE PLANS SHALL NOT BE CONSTRUED TO BE A PERMIT FOR OR THE APPROVAL OF ANY VIOLATION OF CLARK COUNTY WATER RECLAMATION DISTRICT RULES, REGULATIONS, OR DESIGN AND CONSTRUCTION STANDARDS.

LVVWD APPROVAL

APPROVED FOR CONSTRUCTION

LAS VEGAS VALLEY WATER DISTRICT PLANNING AND ENGINEERING SERVICES

PROJECT No. 139055 FIRST APPROVED DATE _____

811 know what's below Call before you dig

SAFETY ALERT Call Before You Overhead 1-702-227-2929

UNION PACIFIC RAILROAD Call Before You Dig 1-800-336-9193

Call before you UnderGround 1-702-492-5300

NO.	REVISIONS	DATE
		APPROVED

CLARK COUNTY NEVADA

LAS VEGAS BLVD WATERLINE REPLACEMENT - TROPICANA AVE TO FLAMINGO RD (PHASE E/F)

12" WATER MAIN - LATERAL PLAN AND PROFILE STA 166+64 & STA 167+84

CLARK COUNTY, NEVADA, DEPARTMENT OF PUBLIC WORKS

PROFESSIONAL ENGINEER - STATE OF NEVADA
RAY P. MONTOYA
Exp. 12/31/2021
CIVIL
No. 025817
10/08/2021

PROJECT No: 500-897-LV-EF DRAWN BY: GAG/KAS/KMT
DESIGNED BY: ROM/GAG CHECKED BY: ALF/RPM/ROM
APPROVED BY _____

Kimley»Horn
6671 Las Vegas Boulevard South, Suite 320
Las Vegas, Nevada 89119
Tel. No.(702) 862-3600

SCALE
HORIZ: 1" = 20'
VERT: 1" = 4'
FIELD BOOK

DRAWING NO.
W-29
SHT. 34 OF 80
L-2304

LAS VEGAS BOULEVARD WATERLINE IMPROVEMENTS

User: Gerardo.Gonzalez
Path: K:\TUC_Waterresources\065813000_Lasvegasblvd\CADD\48 Phase E Water Plans\20-23_C15-C18_LT.dwg
Reuse of and improper reliance on this document without written authorization and adaptation by Kimley-Horn and Associates, Inc. shall be without liability to Kimley-Horn and Associates, Inc.

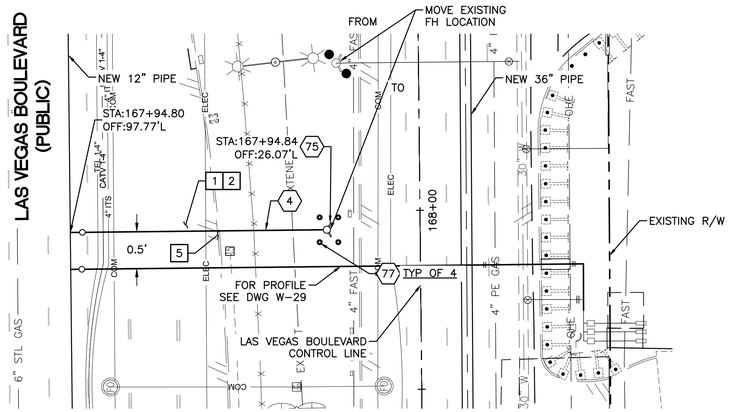

6" FIRE HYDRANT RELOCATION
STA: 167+94.80
SEE DWG NO. W-10

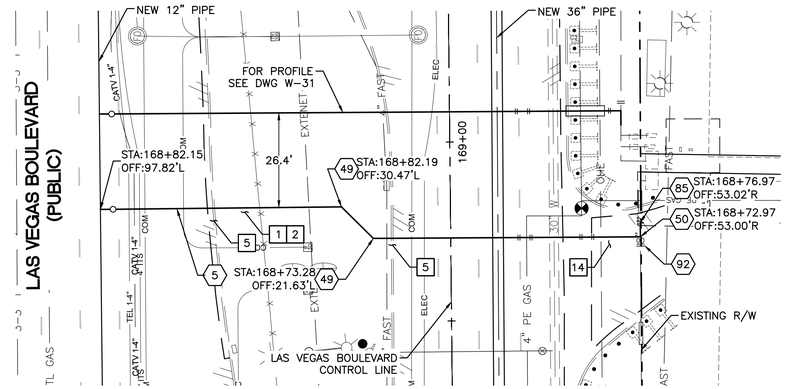

8" WATER LATERAL RECONNECTION
STA: 168+82.15
SEE DWG NO. W-10

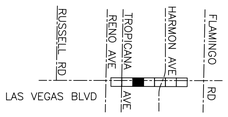

KEY MAP
NTS

LAS VEGAS BOULEVARD WATERLINE IMPROVEMENTS

CONSTRUCTION INDEX

- (4) INSTALL 6" DIP, RESTRAIN AND BOND ALL JOINTS
- (5) INSTALL 8" DIP, RESTRAIN AND BOND ALL JOINTS
- (49) INSTALL 8" X 45° BEND, RESTRAIN JOINTS
- (50) INSTALL 8" X 90° BEND, RESTRAIN JOINTS
- (75) INSTALL NEW FIRE HYDRANT PER UDACS PLATE NOS. 40 AND 41 ON DWGS WD-17 & WD-18
- (77) INSTALL PROTECTIVE BOLLARD PER UDACS PLATE NO. 75 ON DWG WD-18
- (85) CONNECT TO EXISTING 8" PIPE WITH ENGINEER APPROVED SLEEVE COUPLING
- (92) CUT AND CAP EXISTING MAIN PIPE PER DETAIL 1 ON DWG WD-12

CONSTRUCTION NOTES

- [1] ALL TRENCH PER DETAILS ON DWG WD-1
- [2] SAWCUT AND/OR MATCH EXISTING GRADE. CONTRACTOR TO COORDINATE W/ CLARK COUNTY INSPECTOR FOR SAWCUT LOCATIONS
- [5] REPLACE "L" TYPE ISLAND CURB PER CCAUSD DWG. NO. 219
- [14] REPLACE COMMERCIAL DRIVEWAY PER CCAUSD DWG. NO. 224

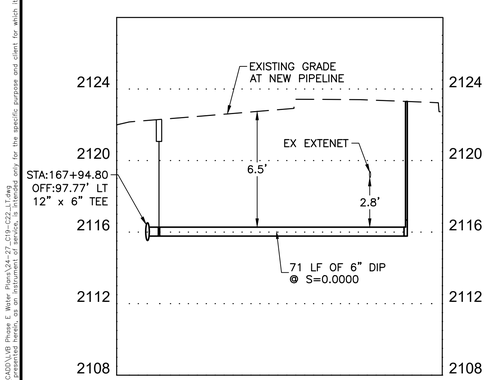

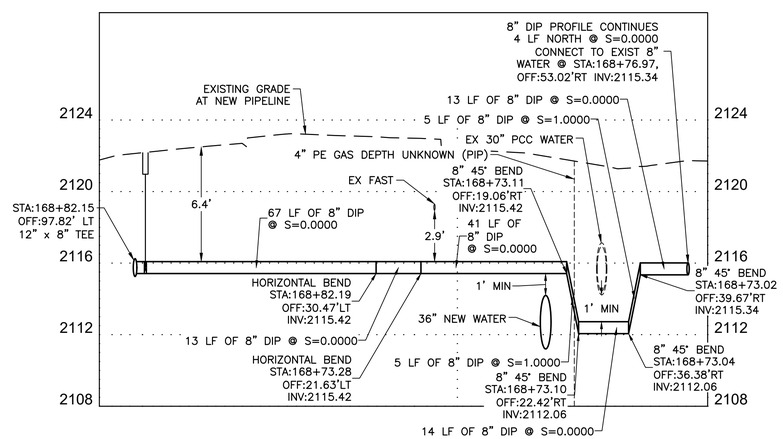

FIRE DEPARTMENT APPROVAL

BY: _____ DATE: _____

APPROVAL OF THESE PLANS SHALL NOT BE CONSTRUED TO BE A PERMIT FOR, OR AN APPROVAL OF ANY VIOLATION OF ANY OF THE PROVISIONS OF STATE OR COUNTY LAWS.

APPROVAL OF THE FIRE DEPARTMENT HAVING JURISDICTION IS REQUIRED PRIOR TO OBTAINING FINAL APPROVAL FROM THE LAS VEGAS VALLEY WATER DISTRICT.

CCWRD APPROVAL

CLARK COUNTY WATER RECLAMATION DISTRICT DATE

CCWRD PIPES NUMBER IS 21,955.
SIGNATURE ON THESE PLANS SHALL NOT BE CONSTRUED TO BE A PERMIT FOR OR THE APPROVAL OF ANY VIOLATION OF CLARK COUNTY WATER RECLAMATION DISTRICT RULES, REGULATIONS, OR DESIGN AND CONSTRUCTION STANDARDS.

LVVWD APPROVAL

APPROVED FOR CONSTRUCTION

LAS VEGAS VALLEY WATER DISTRICT PLANNING AND ENGINEERING SERVICES

PROJECT No. 139055 FIRST APPROVED DATE _____

811 know what's below Call before you dig

SAFETY ALERT Call Before You Overhead 1-702-227-2929

UNION PACIFIC RAILROAD Call Before You Dig 1-800-336-9193

Call before you UnderGround 1-702-432-5300 FREEWAY AND ARTERIAL SYSTEM OF TRANSPORTATION

NO.	REVISIONS	DATE
		APPROVED

CLARK COUNTY NEVADA

LAS VEGAS BLVD WATERLINE REPLACEMENT - TROPICANA AVE TO FLAMINGO RD (PHASE E/F)

12" WATER MAIN - LATERAL PLAN AND PROFILE STA 167+94 & STA 168+82

CLARK COUNTY, NEVADA, DEPARTMENT OF PUBLIC WORKS

PROFESSIONAL ENGINEER - STATE OF NEVADA
RAY P. MONTOYA
Exp. 12/31/2021
CIVIL
No. 025877
10/08/2021

PROJECT No: 500-897-LV-EF DRAWN BY: GAG/KAS/KMT
DESIGNED BY: ROM/GAG CHECKED BY: ALF/RPM/ROM
APPROVED BY

Kimley»Horn
6671 Las Vegas Boulevard South, Suite 320
Las Vegas, Nevada 89119
Tel. No.(702) 862-3600

SCALE
HORIZ: 1" = 20'
VERT: 1" = 4'
FIELD BOOK

DRAWING NO.
W-30
SHT. 35 OF 80
L-2304

User: Cerpinda.Gonzalez
Path: K:\TUC_Water\Resources\109837300_LasVegasBlvd\CADD\LVB Phase E Water Plans\24-27_C19-C22_11.dwg
Any reproduction or use of this document without written authorization and adaptation by Kimley-Horn and Associates, Inc. shall be without liability to Kimley-Horn and Associates, Inc.
Reuse of and improper reliance on this document is prohibited and shall be at the user's own risk. This document is provided only for the specific purpose and client for which it was prepared.

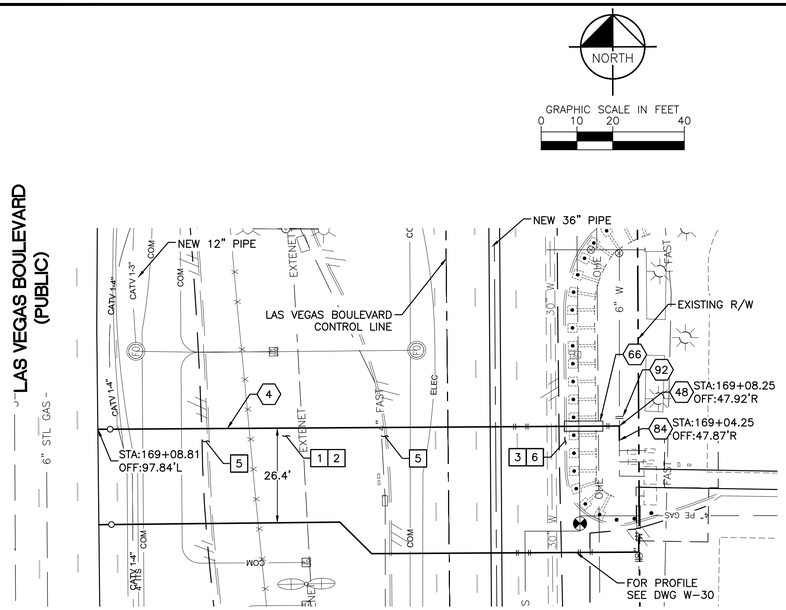

6" WATER LATERAL RECONNECTION
STA: 169+08.81
SEE DWG NO. W-10

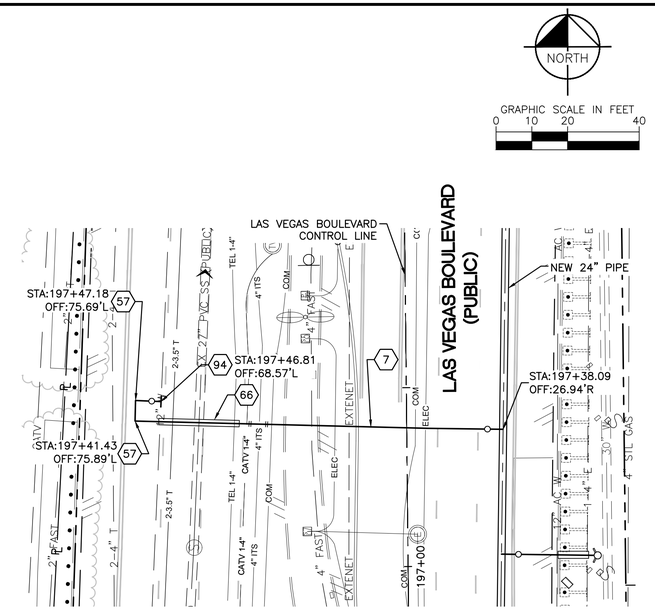

12" WATER LATERAL CONNECTION
STA: 197+38.09
SEE DWG NO. W-10

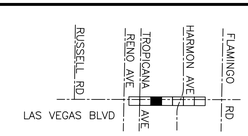

KEY MAP
NTS

CONSTRUCTION INDEX

- (4) INSTALL 6" DIP, RESTRAIN AND BOND ALL JOINTS
- (7) INSTALL 12" DIP, RESTRAIN AND BOND ALL JOINTS
- (48) INSTALL 6" X 90° BEND, RESTRAIN JOINTS
- (57) INSTALL 12" X 90° BEND, RESTRAIN JOINTS
- (66) INSTALL PIPE CASING PER UDACS PLATE NOS. 22 & 23 ON DWG WD-14
- (84) CONNECT TO EXISTING 6" PIPE WITH ENGINEER APPROVED SLEEVE COUPLING
- (92) CUT AND CAP EXISTING MAIN PIPE PER DETAIL 1 ON DWG WD-12
- (94) 12" X 12" TAPPING SLEEVE & VALVE PER UDACS PLATE NOS. 34 & 35 ON DWGS WD-15 & WD-16

CONSTRUCTION NOTES

1. ALL TRENCH PER DETAILS ON DWG WD-1
2. SAWCUT AND/OR MATCH EXISTING GRADE. CONTRACTOR TO COORDINATE W/ CLARK COUNTY INSPECTOR FOR SAWCUT LOCATIONS
3. REPLACE "L" TYPE CURB AND GUTTER PER CCAUSD DWG. NO. 216
5. REPLACE "L" TYPE ISLAND CURB PER CCAUSD DWG. NO. 219
6. REPLACE SIDEWALK PER CCAUSD DWG. NO. 234

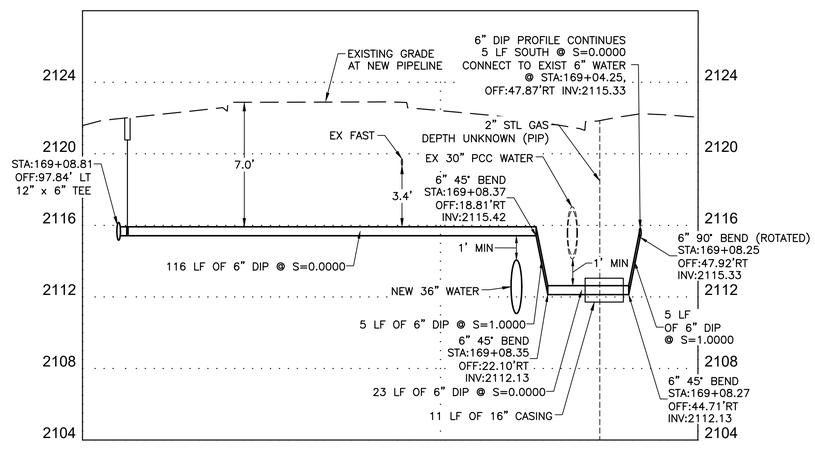

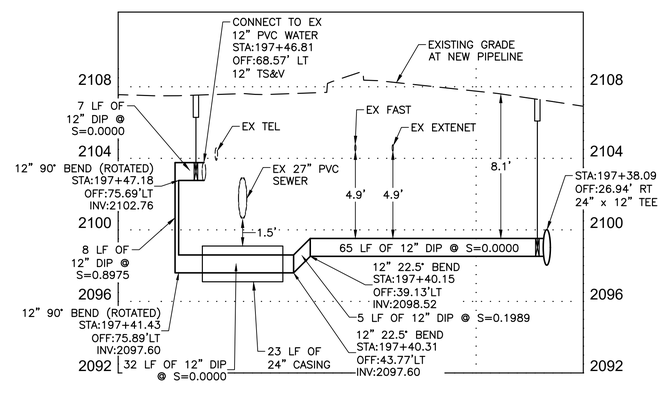

FIRE DEPARTMENT APPROVAL

BY: _____ DATE: _____

APPROVAL OF THESE PLANS SHALL NOT BE CONSTRUED TO BE A PERMIT FOR, OR AN APPROVAL OF ANY VIOLATION OF ANY OF THE PROVISIONS OF STATE OR COUNTY LAWS.

APPROVAL OF THE FIRE DEPARTMENT HAVING JURISDICTION IS REQUIRED PRIOR TO OBTAINING FINAL APPROVAL FROM THE LAS VEGAS VALLEY WATER DISTRICT.

CCWRD APPROVAL

CLARK COUNTY WATER RECLAMATION DISTRICT DATE

CCWRD PIPES NUMBER IS 21,955.
SIGNATURE ON THESE PLANS SHALL NOT BE CONSTRUED TO BE A PERMIT FOR OR THE APPROVAL OF ANY VIOLATION OF CLARK COUNTY WATER RECLAMATION DISTRICT RULES, REGULATIONS, OR DESIGN AND CONSTRUCTION STANDARDS.

LVVWD APPROVAL

APPROVED FOR CONSTRUCTION

LAS VEGAS VALLEY WATER DISTRICT PLANNING AND ENGINEERING SERVICES

PROJECT No. 139055 FIRST APPROVED DATE _____

811 know what's below Call before you dig

SAFETY ALERT Call Before You Overhead 1-702-227-2929

UNION PACIFIC RAILROAD Call Before You Dig 1-800-336-9193

Call before you UnderGround 1-702-492-5300 FREEWAY AND ARTERIAL SYSTEM OF TRANSPORTATION

NO.	REVISIONS	DATE
		APPROVED

CLARK COUNTY NEVADA

LAS VEGAS BLVD WATERLINE REPLACEMENT - TROPICANA AVE TO FLAMINGO RD (PHASE E/F)

12" & 24" WATER MAIN - LATERAL PLAN AND PROFILE STA 169+08 & STA 197+38

CLARK COUNTY, NEVADA, DEPARTMENT OF PUBLIC WORKS

PROFESSIONAL ENGINEER - STATE OF NEVADA
RAY P. MONTOYA
Exp. 12/31/2021
CIVIL
No. 025817
10/08/2021

PROJECT No: 500-897-LV-EF DRAWN BY: GAG/KAS/KMT
DESIGNED BY: ROM/GAG CHECKED BY: ALF/RPM/ROM
APPROVED BY _____

Kimley»Horn
6671 Las Vegas Boulevard South, Suite 320
Las Vegas, Nevada 89119
Tel. No.(702) 862-3600

SCALE
HORIZ: 1" = 20'
VERT: 1" = 4'
FIELD BOOK

DRAWING NO.
W-31
SHT. 36 OF 80
L-2304

LAS VEGAS BOULEVARD WATERLINE IMPROVEMENTS

User: Gerardo.Gonzalez
Path: K:\TUC_Waterresources\065813000_Lasvegasblvd\CADD\48 Phase E Water Plans\24-27_E19-C22_LT.dwg
Reuse of and improper reliance on this document without written authorization and adaptation by Kimley-Horn and Associates, Inc. shall be without liability to Kimley-Horn and Associates, Inc.
This drawing is provided solely for the specific purpose and client for which it was prepared.

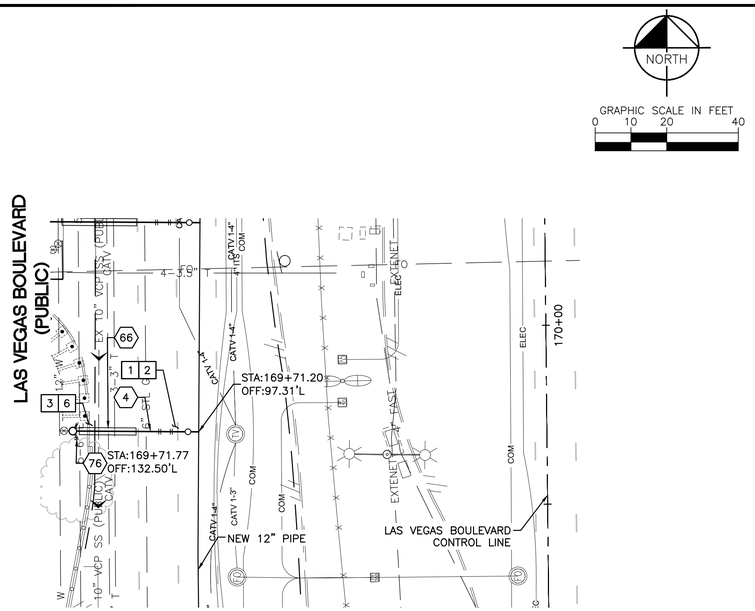

6" FIRE HYDRANT RECONNECTION
STA: 169+71.20
SEE DWG NO. W-11

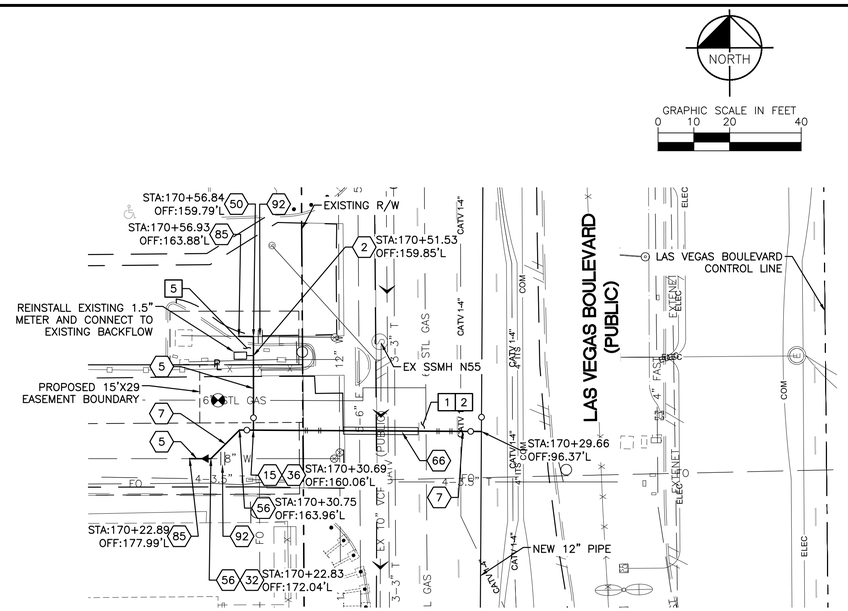

12" WATER LATERAL RECONNECTION
STA: 170+29.66
SEE DWG NO. W-11

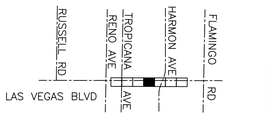

KEY MAP
NTS

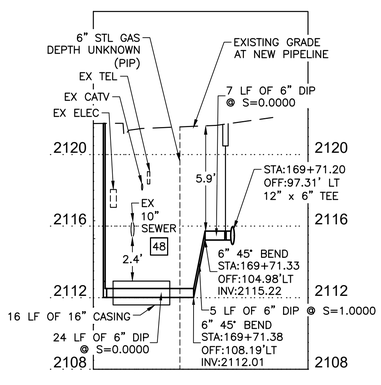

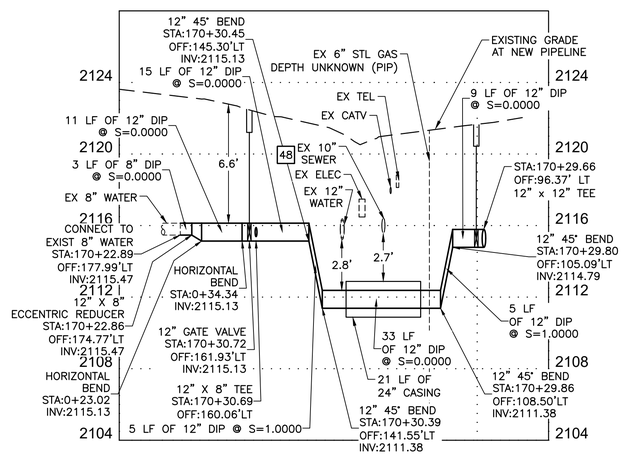

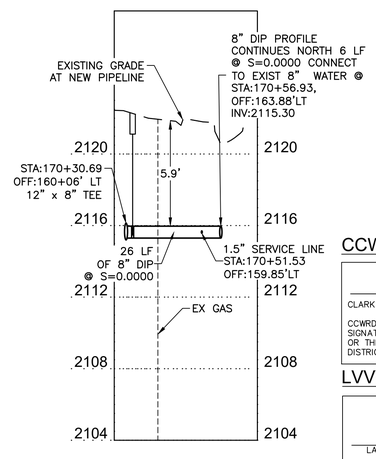

CONSTRUCTION INDEX

- (2) INSTALL 1-1/2" SERVICE LINE PER UDACS PLATE NO. 4 ON DWG WD-14
- (4) INSTALL 6" DIP, RESTRAIN AND BOND ALL JOINTS
- (5) INSTALL 8" DIP, RESTRAIN AND BOND ALL JOINTS
- (7) INSTALL 12" DIP, RESTRAIN AND BOND ALL JOINTS
- (15) INSTALL 12" X 8" TEE, RESTRAIN JOINTS
- (32) INSTALL 12" X 8" REDUCER, RESTRAIN JOINTS
- (36) INSTALL 8" GATE VALVE PER DETAIL 2 ON DWG WD-11 & UDACS PLT NO. 39 ON DWG WD-17
- (50) INSTALL 8" X 90° BEND, RESTRAIN JOINTS
- (56) INSTALL 12" X 45° BEND, RESTRAIN JOINTS
- (66) INSTALL PIPE CASING PER UDACS PLATE NOS. 22 & 23 ON DWG WD-14
- (76) CONNECT TO EXISTING FIRE HYDRANT WITH ENGINEER APPROVED SLEEVE COUPLING
- (85) CONNECT TO EXISTING 8" PIPE WITH ENGINEER APPROVED SLEEVE COUPLING
- (92) CUT AND CAP EXISTING MAIN PIPE PER DETAIL 1 ON DWG WD-12

CONSTRUCTION NOTES

- [1] ALL TRENCH PER DETAILS ON DWG WD-1
- [2] SAWCUT AND/OR MATCH EXISTING GRADE. CONTRACTOR TO COORDINATE W/ CLARK COUNTY INSPECTOR FOR SAWCUT LOCATIONS
- [3] REPLACE "L" TYPE CURB AND GUTTER PER CCAUSD DWG. NO. 216
- [5] REPLACE "L" TYPE ISLAND CURB PER CCAUSD DWG. NO. 219
- [6] REPLACE SIDEWALK PER CCAUSD DWG. NO. 234
- [48] EXISTING SEWER MUST BE PROTECTED IN PLACE PER DCSWCS

FIRE DEPARTMENT APPROVAL

BY: _____ DATE: _____

APPROVAL OF THESE PLANS SHALL NOT BE CONSTRUED TO BE A PERMIT FOR, OR AN APPROVAL OF ANY VIOLATION OF ANY OF THE PROVISIONS OF STATE OR COUNTY LAWS.

APPROVAL OF THE FIRE DEPARTMENT HAVING JURISDICTION IS REQUIRED PRIOR TO OBTAINING FINAL APPROVAL FROM THE LAS VEGAS VALLEY WATER DISTRICT.

CCWRD APPROVAL

CLARK COUNTY WATER RECLAMATION DISTRICT DATE

CCWRD PIPES NUMBER IS 21955
SIGNATURE ON THESE PLANS SHALL NOT BE CONSTRUED TO BE A PERMIT FOR OR THE APPROVAL OF ANY VIOLATION OF CLARK COUNTY WATER RECLAMATION DISTRICT RULES, REGULATIONS, OR DESIGN AND CONSTRUCTION STANDARDS.

LVVWD APPROVAL

APPROVED FOR CONSTRUCTION

LAS VEGAS VALLEY WATER DISTRICT PLANNING AND ENGINEERING SERVICES

PROJECT No. 139055 FIRST APPROVED DATE _____

811 know what's below Call before you dig

SAFETY ALERT Call Before You Overhead 1-702-227-2929

UNION PACIFIC RAILROAD Call Before You Dig 1-800-336-9193

Call before you Underground 1-702-432-5300

NO.	REVISIONS	DATE
		APPROVED

CLARK COUNTY NEVADA

LAS VEGAS BLVD WATERLINE REPLACEMENT - TROPICANA AVE TO FLAMINGO RD (PHASE E/F)

12" WATER MAIN - LATERAL PLAN AND PROFILE STA 169+71 & STA 170+29

CLARK COUNTY, NEVADA, DEPARTMENT OF PUBLIC WORKS

PROFESSIONAL ENGINEER - STATE OF NEVADA
RAY P. MONTOYA
Exp. 12/31/2021
CIVIL
No.025877
10/08/2021

PROJECT No: 500-897-LV-EF
DESIGNED BY: ROM/GAG
APPROVED BY
DRAWN BY: GAG/KAS/KMT
CHECKED BY: ALF/RPM/ROM

Kimley»Horn
6671 Las Vegas Boulevard South, Suite 320
Las Vegas, Nevada 89119
Tel. No.(702) 862-3600

SCALE
HORIZ: 1" = 20'
VERT: 1" = 4'
FIELD BOOK

DRAWING NO.
W-32
SHT. 37 OF 80
L-2304

LAS VEGAS BOULEVARD WATERLINE IMPROVEMENTS

User: Gerardo.Gonzalez
Path: K:\TUC_Water\Resources\096513000_Lasvegasblvd\CADD\LVB Phase E Water Plans\24-27_C19-C22_LT.dwg
Kimley-Horn and Associates, Inc. This document is provided for the specific purpose and client for which it was prepared. Reuse of and improper reliance on this document without written authorization and adaptation by Kimley-Horn and Associates, Inc. shall be without liability to Kimley-Horn and Associates, Inc.

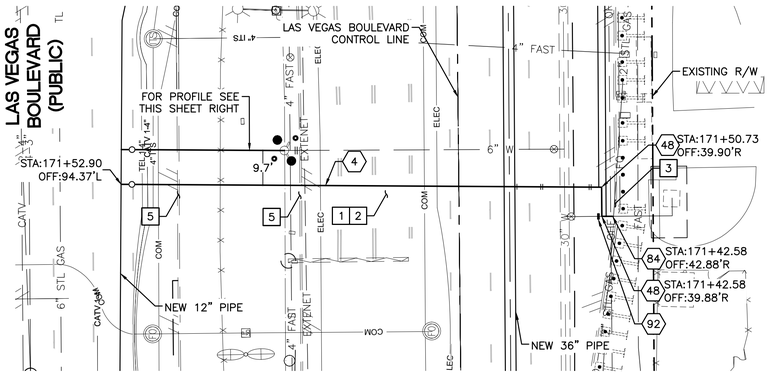

6" WATER LATERAL RECONNECTION
STA: 171+52.90
SEE DWG NO. W-11

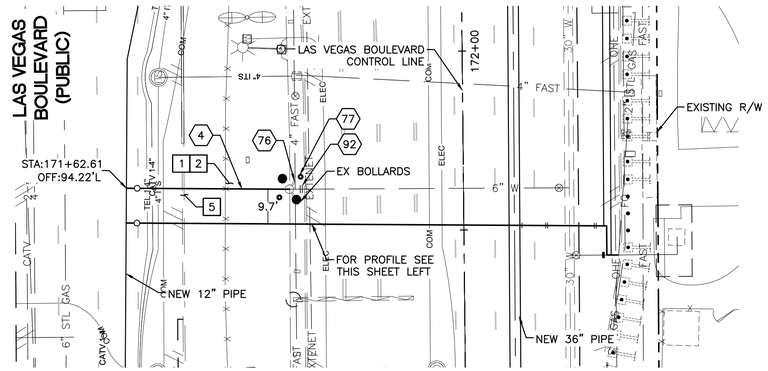

6" FIRE HYDRANT RECONNECTION
STA: 171+62.61
SEE DWG NO. W-11

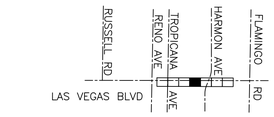

KEY MAP
NTS

CONSTRUCTION INDEX

- (4) INSTALL 6" DIP, RESTRAIN AND BOND ALL JOINTS
- (48) INSTALL 6" X 90° BEND, RESTRAIN JOINTS
- (76) CONNECT TO EXISTING FIRE HYDRANT WITH ENGINEER APPROVED SLEEVE COUPLING
- (77) INSTALL PROTECTIVE BOLLARD PER UDACS PLATE NO. 75 ON DWG WD-18
- (84) CONNECT TO EXISTING 6" PIPE WITH ENGINEER APPROVED SLEEVE COUPLING
- (92) CUT AND CAP EXISTING MAIN PIPE PER DETAIL 1 ON DWG WD-12

CONSTRUCTION NOTES

1. ALL TRENCH PER DETAILS ON DWG WD-1
2. SAWCUT AND/OR MATCH EXISTING GRADE. CONTRACTOR TO COORDINATE W/ CLARK COUNTY INSPECTOR FOR SAWCUT LOCATIONS
3. REPLACE "L" TYPE CURB AND GUTTER PER CCAUSD DWG. NO. 216
5. REPLACE "L" TYPE ISLAND CURB PER CCAUSD DWG. NO. 219

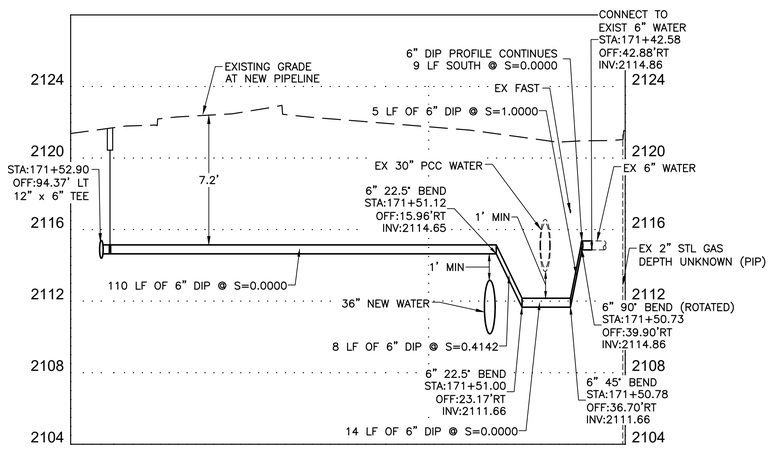

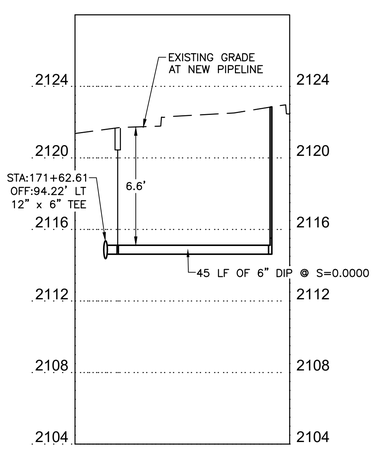

FIRE DEPARTMENT APPROVAL

BY: _____ DATE: _____

APPROVAL OF THESE PLANS SHALL NOT BE CONSTRUED TO BE A PERMIT FOR, OR AN APPROVAL OF ANY VIOLATION OF ANY OF THE PROVISIONS OF STATE OR COUNTY LAWS.

APPROVAL OF THE FIRE DEPARTMENT HAVING JURISDICTION IS REQUIRED PRIOR TO OBTAINING FINAL APPROVAL FROM THE LAS VEGAS VALLEY WATER DISTRICT.

CCWRD APPROVAL

CLARK COUNTY WATER RECLAMATION DISTRICT DATE

CCWRD PIPES NUMBER IS 21955
SIGNATURE ON THESE PLANS SHALL NOT BE CONSTRUED TO BE A PERMIT FOR OR THE APPROVAL OF ANY VIOLATION OF CLARK COUNTY WATER RECLAMATION DISTRICT RULES, REGULATIONS, OR DESIGN AND CONSTRUCTION STANDARDS.

LVVWD APPROVAL

APPROVED FOR CONSTRUCTION

LAS VEGAS VALLEY WATER DISTRICT PLANNING AND ENGINEERING SERVICES

PROJECT No. 139055 FIRST APPROVED DATE _____

811 know what's below Call before you dig

SAFETY ALERT Call Before You Overhead 1-702-227-2929

UNION PACIFIC RAILROAD Call Before You Dig 1-800-336-9193

Call before you UnderGround 1-702-492-5300

NO.	REVISIONS	DATE
		APPROVED

CLARK COUNTY NEVADA

LAS VEGAS BLVD WATERLINE REPLACEMENT - TROPICANA AVE TO FLAMINGO RD (PHASE E/F)

12" WATER MAIN - LATERAL PLAN AND PROFILE STA 171+52 & STA 171+62

CLARK COUNTY, NEVADA, DEPARTMENT OF PUBLIC WORKS

PROFESSIONAL ENGINEER - STATE OF NEVADA
RAY P. MONTOYA
Exp. 12/31/2021
CIVIL
No. 025817
10/08/2021

PROJECT No: 500-897-LV-EF DRAWN BY: GAG/KAS/KMT
DESIGNED BY: ROM/GAG CHECKED BY: ALF/RPM/ROM
APPROVED BY _____

Kimley»Horn
6671 Las Vegas Boulevard South, Suite 320
Las Vegas, Nevada 89119
Tel. No.(702) 862-3600

SCALE
HORIZ: 1" = 20'
VERT: 1" = 4'
FIELD BOOK

DRAWING NO.
W-33
SHT. 38 OF 80
L-2304

LAS VEGAS BOULEVARD WATERLINE IMPROVEMENTS

Reuse of and improper reliance on this document without written authorization and adaptation by Kimley-Horn and Associates, Inc. shall be without liability to Kimley-Horn and Associates, Inc.
Electronic copy provided strictly for convenience purposes and is a reproduced copy for the specific purpose and client for which it was prepared.
User: Gerardo.Gonzalez
Path: K:\TUC_Waterresources\065813000_Lasvegasblvd\CADD\48 Phase E Water Plans\24-27_E19-C22_LT.dwg

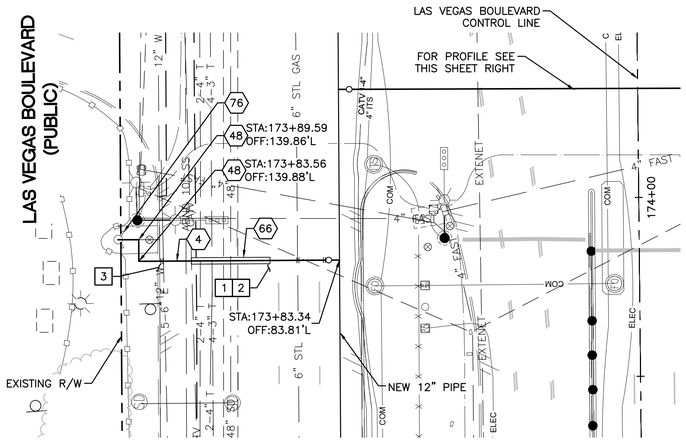

6" FIRE HYDRANT RECONNECTION
STA: 173+83.34
SEE DWG NO. W-11

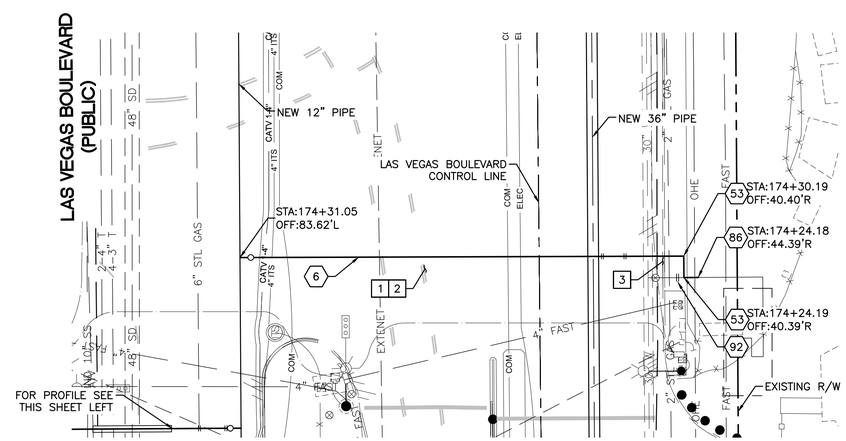

10" WATER LATERAL RECONNECTION
STA: 174+31.05
SEE DWG NO. W-11

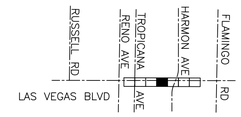

KEY MAP
NTS

CONSTRUCTION INDEX

- (4) INSTALL 6" DIP, RESTRAIN AND BOND ALL JOINTS
- (6) INSTALL 10" DIP, RESTRAIN AND BOND ALL JOINTS
- (48) INSTALL 6" X 90° BEND, RESTRAIN JOINTS
- (53) INSTALL 10" X 90° BEND, RESTRAIN JOINTS
- (66) INSTALL PIPE CASING PER UDACS PLATE NOS. 22 & 23 ON DWG WD-14
- (76) CONNECT TO EXISTING FIRE HYDRANT WITH ENGINEER APPROVED SLEEVE COUPLING
- (86) CONNECT TO EXISTING 10" PIPE WITH ENGINEER APPROVED SLEEVE COUPLING
- (92) CUT AND CAP EXISTING MAIN PIPE PER DETAIL 1 ON DWG WD-12

CONSTRUCTION NOTES

1. ALL TRENCH PER DETAILS ON DWG WD-1
2. SAWCUT AND/OR MATCH EXISTING GRADE. CONTRACTOR TO COORDINATE W/ CLARK COUNTY INSPECTOR FOR SAWCUT LOCATIONS
3. REPLACE "L" TYPE CURB AND GUTTER PER CCAUSD DWG. NO. 216

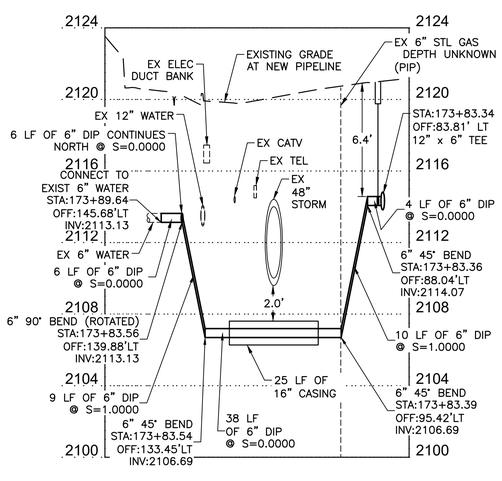

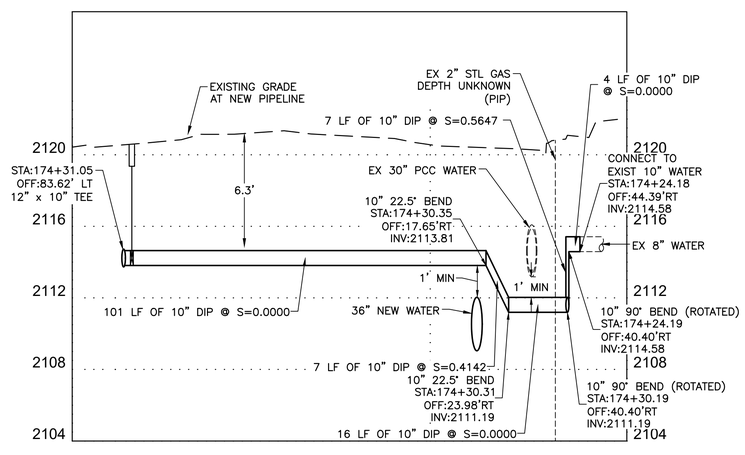

FIRE DEPARTMENT APPROVAL

BY: _____ DATE: _____

APPROVAL OF THESE PLANS SHALL NOT BE CONSTRUED TO BE A PERMIT FOR, OR AN APPROVAL OF ANY VIOLATION OF ANY OF THE PROVISIONS OF STATE OR COUNTY LAWS.

APPROVAL OF THE FIRE DEPARTMENT HAVING JURISDICTION IS REQUIRED PRIOR TO OBTAINING FINAL APPROVAL FROM THE LAS VEGAS VALLEY WATER DISTRICT.

CCWRD APPROVAL

CLARK COUNTY WATER RECLAMATION DISTRICT DATE

CCWRD PIPES NUMBER IS 21955
SIGNATURE ON THESE PLANS SHALL NOT BE CONSTRUED TO BE A PERMIT FOR OR THE APPROVAL OF ANY VIOLATION OF CLARK COUNTY WATER RECLAMATION DISTRICT RULES, REGULATIONS, OR DESIGN AND CONSTRUCTION STANDARDS.

LVVWD APPROVAL

APPROVED FOR CONSTRUCTION

LAS VEGAS VALLEY WATER DISTRICT PLANNING AND ENGINEERING SERVICES

PROJECT No. 139055 FIRST APPROVED DATE _____

811 know what's below Call before you dig

SAFETY ALERT Call Before You Overhead 1-702-227-2929

UNION PACIFIC RAILROAD Call Before You Dig 1-800-336-9193

Call before you UnderGround 1-702-432-5300

NO.	REVISIONS	DATE
		APPROVED

CLARK COUNTY NEVADA

LAS VEGAS BLVD WATERLINE REPLACEMENT - TROPICANA AVE TO FLAMINGO RD (PHASE E/F)

12" WATER MAIN - LATERAL PLAN AND PROFILE STA 173+83 & STA 174+31

CLARK COUNTY, NEVADA, DEPARTMENT OF PUBLIC WORKS

PROFESSIONAL ENGINEER - STATE OF NEVADA
RAY P. MONTOYA
Exp. 12/31/2021
CIVIL
No. 025877
10/08/2021

PROJECT No: 500-897-LV-EF DRAWN BY: GAG/KAS/KMT
DESIGNED BY: ROM/GAG CHECKED BY: ALF/RPM/ROM
APPROVED BY _____

Kimley»Horn
6671 Las Vegas Boulevard South, Suite 320
Las Vegas, Nevada 89119
Tel. No.(702) 862-3600

SCALE
HORIZ: 1" = 20'
VERT: 1" = 4'
FIELD BOOK

DRAWING NO.
W-34
SHT. 39 OF 80
L-2304

LAS VEGAS BOULEVARD WATERLINE IMPROVEMENTS

User: Gerardo.Gonzalez
Path: K:\TUC_Water\Resources\096513000_Lasvegasblvd\CADD\LVB Phase E Water Plans\24-27_C19-C22_L1.dwg
Any reproduction or use of this document or its contents is prohibited without written authorization and adaptation by Kimley-Horn and Associates, Inc. shall be without liability to Kimley-Horn and Associates, Inc. Reuse of and improper reliance on this document without written authorization and adaptation by Kimley-Horn and Associates, Inc. shall be without liability to Kimley-Horn and Associates, Inc.

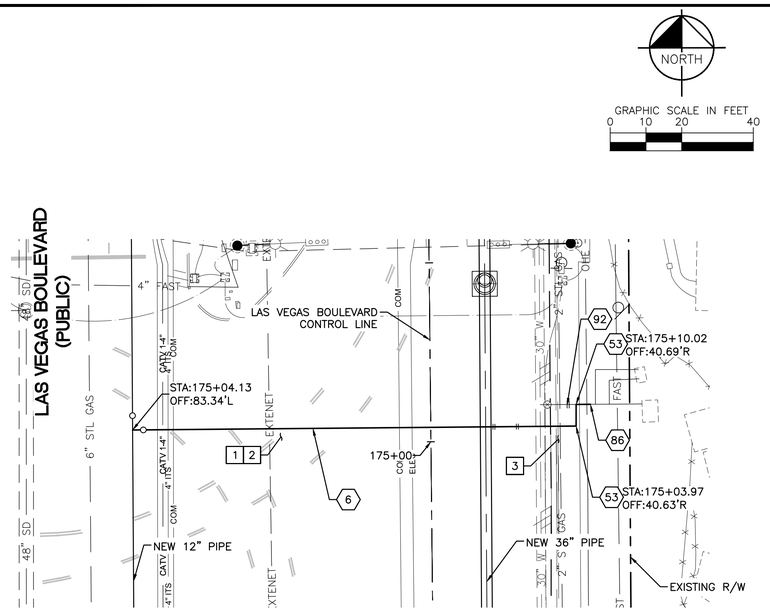

10" WATER LATERAL RECONNECTION
STA: 175+04.13
SEE DWG NO. W-11

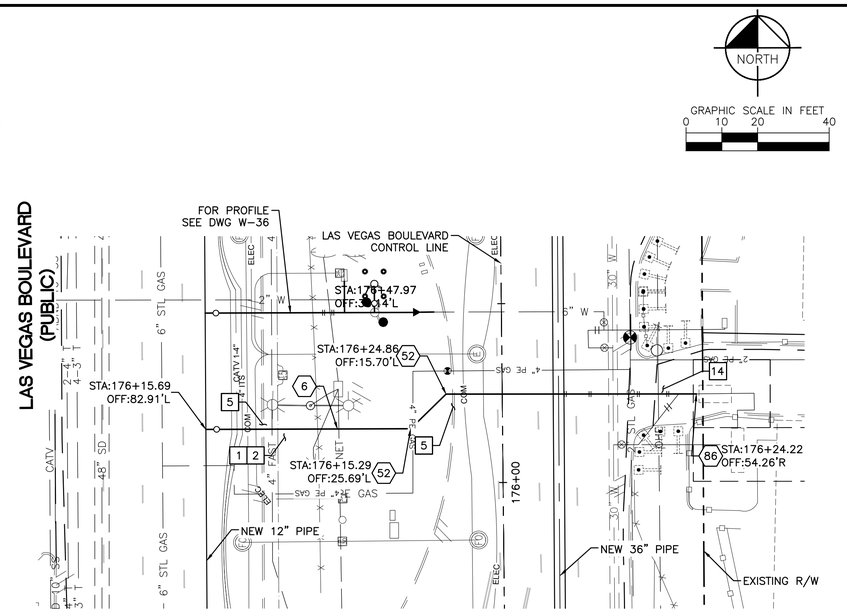

10" WATER MAIN RECONNECTION
STA: 176+15.69
SEE DWG NO. W-5

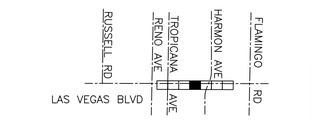

KEY MAP
NTS

CONSTRUCTION INDEX

- (6) INSTALL 10" DIP, RESTRAIN AND BOND ALL JOINTS
- (52) INSTALL 10" X 45° BEND, RESTRAIN JOINTS
- (53) INSTALL 10" X 90° BEND, RESTRAIN JOINTS
- (86) CONNECT TO EXISTING 10" PIPE WITH ENGINEER APPROVED SLEEVE COUPLING
- (92) CUT AND CAP EXISTING MAIN PIPE PER DETAIL 1 ON DWG WD-12

CONSTRUCTION NOTES

1. ALL TRENCH PER DETAILS ON DWG WD-1
2. SAWCUT AND/OR MATCH EXISTING GRADE. CONTRACTOR TO COORDINATE W/ CLARK COUNTY INSPECTOR FOR SAWCUT LOCATIONS
3. REPLACE "L" TYPE CURB AND GUTTER PER CCAUSD DWG. NO. 216
5. REPLACE "L" TYPE ISLAND CURB PER CCAUSD DWG. NO. 219
14. REPLACE COMMERCIAL DRIVEWAY PER CCAUSD DWG. NO. 224

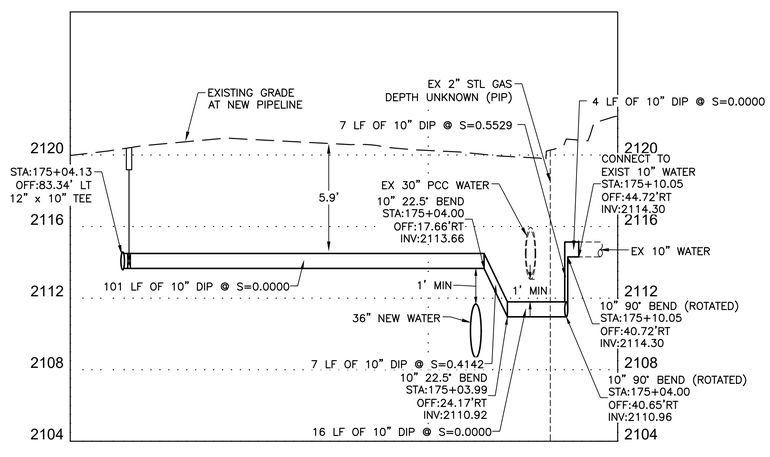

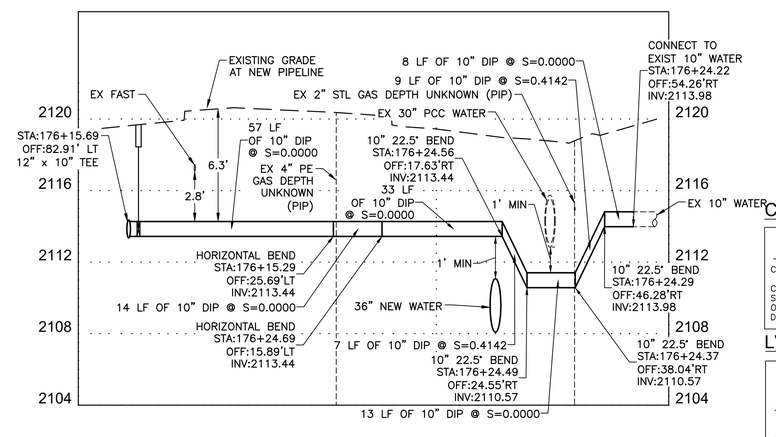

FIRE DEPARTMENT APPROVAL

BY: _____ DATE: _____

APPROVAL OF THESE PLANS SHALL NOT BE CONSTRUED TO BE A PERMIT FOR, OR AN APPROVAL OF ANY VIOLATION OF ANY OF THE PROVISIONS OF STATE OR COUNTY LAWS.

APPROVAL OF THE FIRE DEPARTMENT HAVING JURISDICTION IS REQUIRED PRIOR TO OBTAINING FINAL APPROVAL FROM THE LAS VEGAS VALLEY WATER DISTRICT.

CCWRD APPROVAL

CLARK COUNTY WATER RECLAMATION DISTRICT DATE

CCWRD PIPES NUMBER IS 21955.
SIGNATURE ON THESE PLANS SHALL NOT BE CONSTRUED TO BE A PERMIT FOR OR THE APPROVAL OF ANY VIOLATION OF CLARK COUNTY WATER RECLAMATION DISTRICT RULES, REGULATIONS, OR DESIGN AND CONSTRUCTION STANDARDS.

LVVWD APPROVAL

APPROVED FOR CONSTRUCTION

LAS VEGAS VALLEY WATER DISTRICT PLANNING AND ENGINEERING SERVICES

PROJECT No. 139055 FIRST APPROVED DATE _____

811 know what's below Call before you dig

SAFETY ALERT Call Before You Overhead 1-702-227-2929

UNION PACIFIC RAILROAD Call Before You Dig 1-800-336-9193

Call before you UnderGround 1-702-492-5300

NO.	REVISIONS	DATE
		APPROVED

CLARK COUNTY NEVADA

LAS VEGAS BLVD WATERLINE REPLACEMENT - TROPICANA AVE TO FLAMINGO RD (PHASE E/F)

12" WATER MAIN - LATERAL PLAN AND PROFILE STA 175+04 & STA 176+15

CLARK COUNTY, NEVADA, DEPARTMENT OF PUBLIC WORKS

PROFESSIONAL ENGINEER - STATE OF NEVADA
RAY P. MONTOYA
Exp. 12/31/2021
CIVIL
No. 025817
10/08/2021

PROJECT No: 500-897-LV-EF DRAWN BY: GAG/KAS/KMT
DESIGNED BY: ROM/GAG CHECKED BY: ALF/RPM/ROM
APPROVED BY

Kimley»Horn
6671 Las Vegas Boulevard South, Suite 320
Las Vegas, Nevada 89119
Tel. No.(702) 862-3600

SCALE
HORIZ: 1" = 20'
VERT: 1" = 4'
FIELD BOOK

DRAWING NO.
W-35
SHT. 40 OF 80
L-2304

LAS VEGAS BOULEVARD WATERLINE IMPROVEMENTS

Reuse of and improper reliance on this document without written authorization and adaptation by Kimley-Horn and Associates, Inc. shall be without liability to Kimley-Horn and Associates, Inc.
Plotted on Thursday, October 07, 2021 at 7:42:27 AM by Gonzalez, Karen
For plotting purposes only.
User: Gerardo.Gonzalez
Path: K:\TUC_Waterresources\065813000_Lasvegasblvd\CADD\WD Phase E Water Plans\26-30,C23-C25_LT.dwg

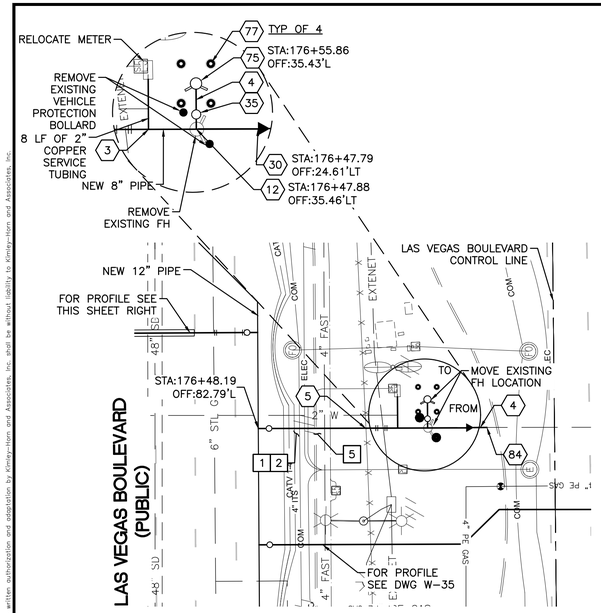

8" WATER LATERAL RECONNECTION
STA: 176+48.19
SEE DWG NO. W-11

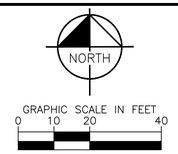

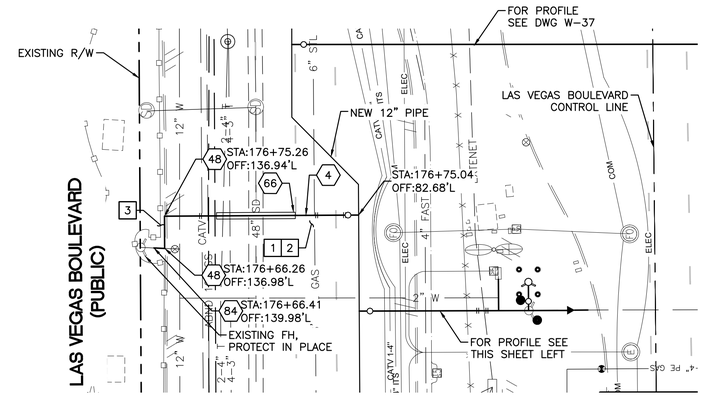

6" FIRE HYDRANT RECONNECTION
STA: 176+75.04
SEE DWG NO. W-11

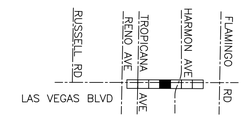

KEY MAP
NTS

CONSTRUCTION INDEX

- 3 INSTALL 2" SERVICE LINE PER UDACS PLATE NO. 4 ON DWG WD-14
- 4 INSTALL 6" DIP, RESTRAIN AND BOND ALL JOINTS
- 5 INSTALL 8" DIP, RESTRAIN AND BOND ALL JOINTS
- 12 INSTALL 8" X 6" TEE, RESTRAIN JOINTS
- 30 INSTALL 8" X 6" REDUCER, RESTRAIN JOINTS
- 35 INSTALL 6" GATE VALVE PER DETAIL 2 ON DWG WD-11 & UDACS PLT NO. 39 ON DWG WD-17
- 48 INSTALL 6" X 90° BEND, RESTRAIN JOINTS
- 66 INSTALL PIPE CASING PER UDACS PLATE NOS. 22 & 23 ON DWG WD-14
- 75 INSTALL NEW FIRE HYDRANT PER UDACS PLATE NOS. 40 AND 41 ON DWGS WD-17 & WD-18
- 77 INSTALL PROTECTIVE BOLLARD PER UDACS PLATE NO. 75 ON DWG WD-18
- 84 CONNECT TO EXISTING 6" PIPE WITH ENGINEER APPROVED SLEEVE COUPLING

CONSTRUCTION NOTES

- 1 ALL TRENCH PER DETAILS ON DWG WD-1
- 2 SAWCUT AND/OR MATCH EXISTING GRADE. CONTRACTOR TO COORDINATE W/ CLARK COUNTY INSPECTOR FOR SAWCUT LOCATIONS
- 3 REPLACE "L" TYPE CURB AND GUTTER PER CCAUSD DWG. NO. 216
- 5 REPLACE "L" TYPE ISLAND CURB PER CCAUSD DWG. NO. 219

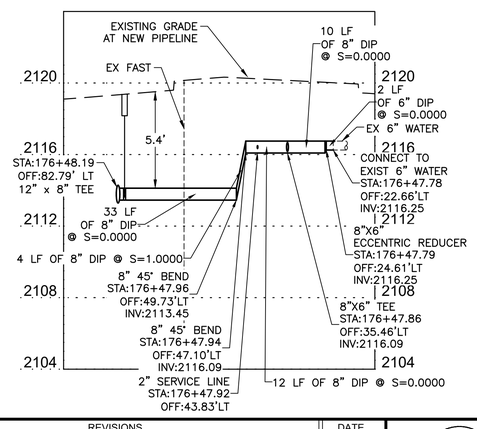

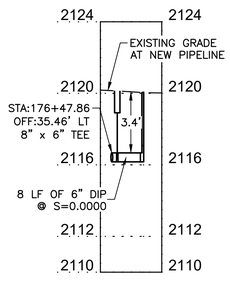

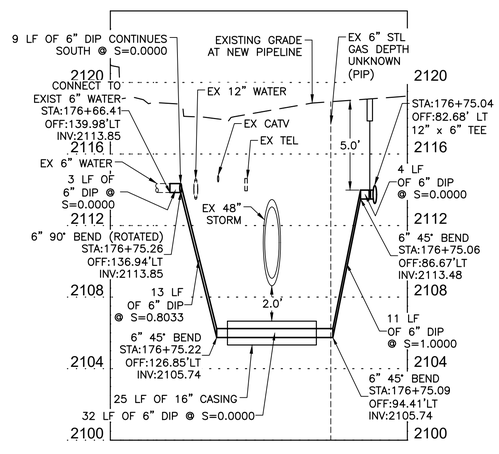

FIRE DEPARTMENT APPROVAL

BY: _____ DATE: _____

APPROVAL OF THESE PLANS SHALL NOT BE CONSTRUED TO BE A PERMIT FOR, OR AN APPROVAL OF ANY VIOLATION OF ANY OF THE PROVISIONS OF STATE OR COUNTY LAWS.

APPROVAL OF THE FIRE DEPARTMENT HAVING JURISDICTION IS REQUIRED PRIOR TO OBTAINING FINAL APPROVAL FROM THE LAS VEGAS VALLEY WATER DISTRICT.

CCWRD APPROVAL

CLARK COUNTY WATER RECLAMATION DISTRICT DATE

CCWRD PIPES NUMBER IS 21955
SIGNATURE ON THESE PLANS SHALL NOT BE CONSTRUED TO BE A PERMIT FOR OR THE APPROVAL OF ANY VIOLATION OF CLARK COUNTY WATER RECLAMATION DISTRICT RULES, REGULATIONS, OR DESIGN AND CONSTRUCTION STANDARDS.

LVVWD APPROVAL

APPROVED FOR CONSTRUCTION

LAS VEGAS VALLEY WATER DISTRICT PLANNING AND ENGINEERING SERVICES

PROJECT No. 139055 FIRST APPROVED DATE _____

811 know what's below Call before you dig

SAFETY ALERT Call Before You Overhead 1-702-227-2929

UNION PACIFIC RAILROAD Call Before You Dig 1-800-336-9193

Call before you UnderGround 1-702-432-5300

NO.	REVISIONS	DATE
		APPROVED

CLARK COUNTY NEVADA

LAS VEGAS BLVD WATERLINE REPLACEMENT - TROPICANA AVE TO FLAMINGO RD (PHASE E/F)

12" WATER MAIN - LATERAL PLAN AND PROFILE STA 176+48 & STA 176+75

CLARK COUNTY, NEVADA, DEPARTMENT OF PUBLIC WORKS

PROFESSIONAL ENGINEER - STATE OF NEVADA
RAY P. MONTOYA
Exp. 12/31/2021
CIVIL
No. 025877
10/08/2021

PROJECT No: 500-897-LV-EF
DESIGNED BY: ROM/GAG
APPROVED BY
DRAWN BY: GAG/KAS/KMT
CHECKED BY: ALF/RPM/ROM

Kimley»Horn
6671 Las Vegas Boulevard South, Suite 320
Las Vegas, Nevada 89119
Tel. No.(702) 862-3600

SCALE
HORIZ: 1" = 20'
VERT: 1" = 4'
FIELD BOOK

DRAWING NO.
W-36
SHT. 41 OF 80
L-2304

LAS VEGAS BOULEVARD WATERLINE IMPROVEMENTS

Reuse of and improper reliance on this document without written authorization and adaptation by Kimley-Horn and Associates, Inc. shall be without liability to Kimley-Horn and Associates, Inc.
Kimley-Horn and Associates, Inc. makes no representations to anyone other than its client and its client's agents and consultants, and only for the specific purpose and client for which it was prepared.
User: Gerardo.Gonzalez
Path: K:\TUC_Water\Resources\098513000_Lasvegasblvd\CADD\LVB Phase E Water Plans\28-30_C23-C25_LT.dwg

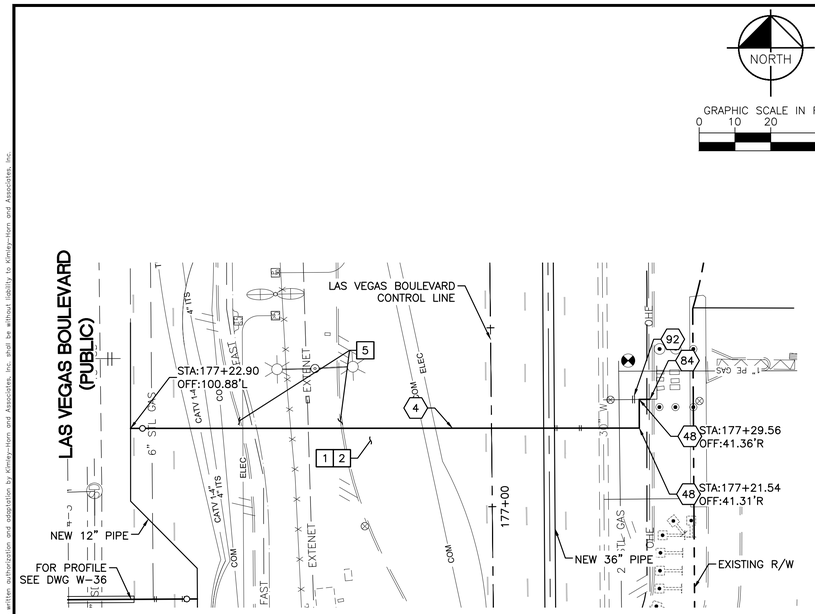

6' WATER LATERAL RECONNECTION
STA: 177+22.90
SEE DWG NO. W-11

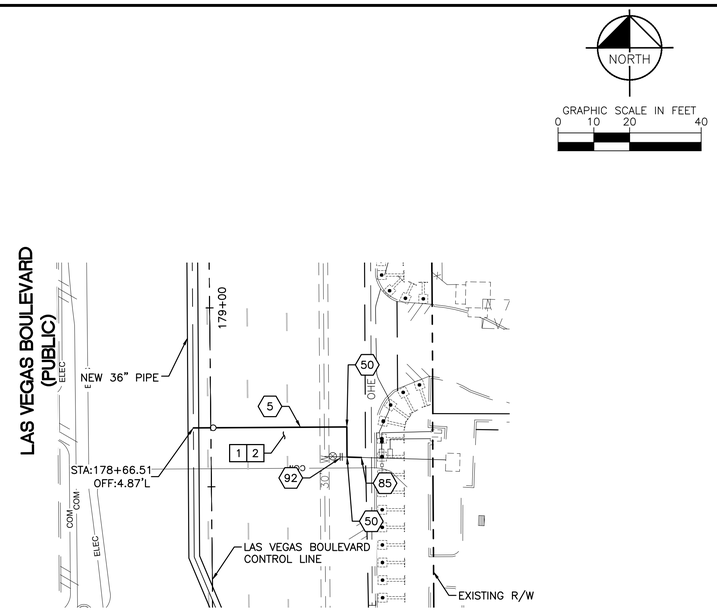

8' WATER LATERAL RECONNECTION
STA: 178+66.51
SEE DWG NO. W-5

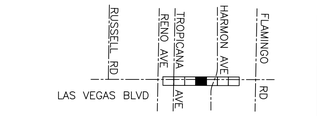

KEY MAP
NTS

LAS VEGAS BOULEVARD WATERLINE IMPROVEMENTS

CONSTRUCTION INDEX

- (4) INSTALL 6" DIP, RESTRAIN AND BOND ALL JOINTS
- (5) INSTALL 8" DIP, RESTRAIN AND BOND ALL JOINTS
- (48) INSTALL 6" X 90° BEND, RESTRAIN JOINTS
- (50) INSTALL 8" X 90° BEND, RESTRAIN JOINTS
- (84) CONNECT TO EXISTING 6" PIPE WITH ENGINEER APPROVED SLEEVE COUPLING
- (85) CONNECT TO EXISTING 8" PIPE WITH ENGINEER APPROVED SLEEVE COUPLING
- (92) CUT AND CAP EXISTING MAIN PIPE PER DETAIL 1 ON DWG WD-12

CONSTRUCTION NOTES

1. ALL TRENCH PER DETAILS ON DWG WD-1
2. SAWCUT AND/OR MATCH EXISTING GRADE. CONTRACTOR TO COORDINATE W/ CLARK COUNTY INSPECTOR FOR SAWCUT LOCATIONS
5. REPLACE "L" TYPE ISLAND CURB PER CCAUSD DWG. NO. 219

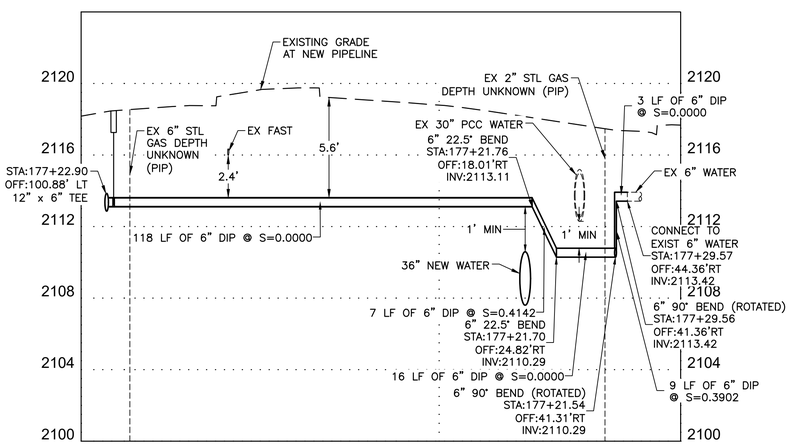

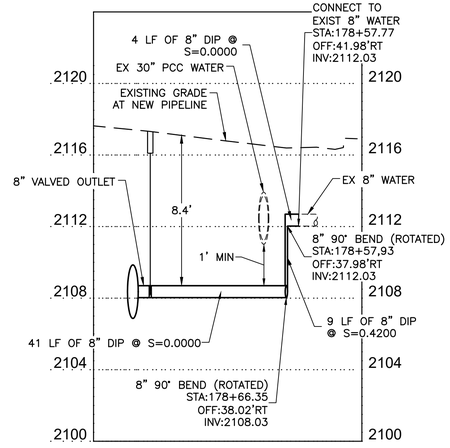

FIRE DEPARTMENT APPROVAL

BY: _____ DATE: _____

APPROVAL OF THESE PLANS SHALL NOT BE CONSTRUED TO BE A PERMIT FOR, OR AN APPROVAL OF ANY VIOLATION OF ANY OF THE PROVISIONS OF STATE OR COUNTY LAWS.

APPROVAL OF THE FIRE DEPARTMENT HAVING JURISDICTION IS REQUIRED PRIOR TO OBTAINING FINAL APPROVAL FROM THE LAS VEGAS VALLEY WATER DISTRICT.

CCWRD APPROVAL

CLARK COUNTY WATER RECLAMATION DISTRICT DATE

CCWRD PIPES NUMBER IS 21,955.
SIGNATURE ON THESE PLANS SHALL NOT BE CONSTRUED TO BE A PERMIT FOR OR THE APPROVAL OF ANY VIOLATION OF CLARK COUNTY WATER RECLAMATION DISTRICT RULES, REGULATIONS, OR DESIGN AND CONSTRUCTION STANDARDS.

LVVWD APPROVAL

APPROVED FOR CONSTRUCTION

LAS VEGAS VALLEY WATER DISTRICT PLANNING AND ENGINEERING SERVICES

PROJECT No. 139055 FIRST APPROVED DATE _____

811 know what's below Call before you dig

SAFETY ALERT Call Before You Overhead 1-702-227-2929

UNION PACIFIC RAILROAD Call Before You Dig 1-800-336-9193

Call before you UnderGround 1-702-432-5300 FREEWAY AND INTERSTATE SYSTEM OF TRANSPORTATION

NO.	REVISIONS	DATE
		APPROVED

CLARK COUNTY NEVADA

LAS VEGAS BLVD WATERLINE REPLACEMENT - TROPICANA AVE TO FLAMINGO RD (PHASE E/F)

12" & 36" WATER MAIN - LATERAL PLAN AND PROFILE STA 177+22 & STA 178+66

CLARK COUNTY, NEVADA, DEPARTMENT OF PUBLIC WORKS

PROFESSIONAL ENGINEER - STATE OF NEVADA
RAY P. MONTOYA
Exp. 12/31/2021
CIVIL
No. 025877
10/08/2021

PROJECT No: 500-897-LV-EF
DESIGNED BY: ROM/GAG
APPROVED BY
DRAWN BY: GAG/KAS/KMT
CHECKED BY: ALF/RPM/ROM

Kimley»Horn
6671 Las Vegas Boulevard South Suite 320
Las Vegas, Nevada 89119
Tel. No.(702) 862-3600

SCALE
HORIZ: 1" = 20'
VERT: 1" = 4'
FIELD BOOK

DRAWING NO.
W-37
SHT. 42 OF 80
L-2304

User: Gerardo.Gonzalez
Path: K:\Civil_Water\Resources\096513000_Lasvegasblvd\CADD\LVB Phase E Water Plans\28-30_C23-C25_L1.dwg
Any reproduction or use of this document or its contents is prohibited without the express written authorization and adaptation by Kimley-Horn and Associates, Inc. shall be without liability to Kimley-Horn and Associates, Inc.
Reuse of and improper reliance on this document without written authorization and adaptation by Kimley-Horn and Associates, Inc. shall be without liability to Kimley-Horn and Associates, Inc.
Any reproduction or use of this document or its contents is prohibited only for the specific purpose and client for which it was prepared.

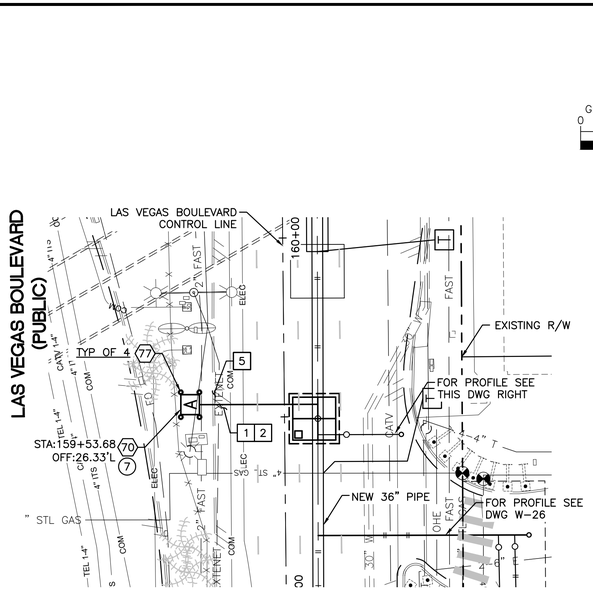

36" VALVE VAULT
AIR VALVE ASSEMBLY
STA: 159+49
SEE DWG NO. W-2

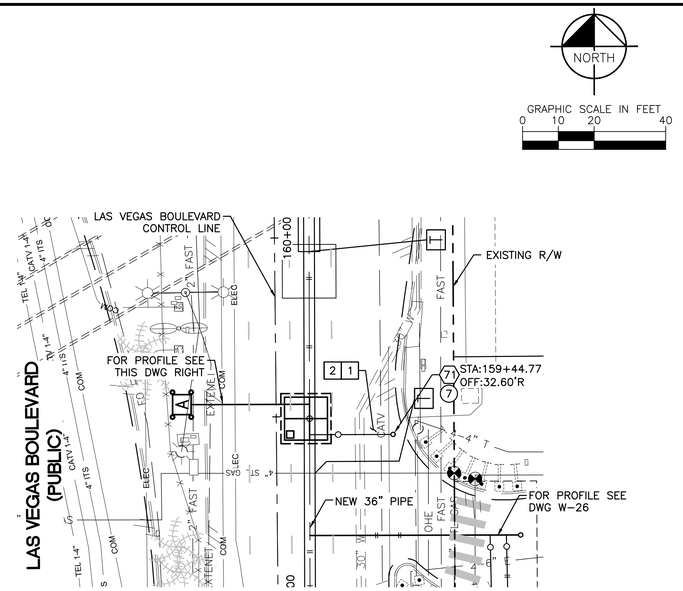

36" VALVE VAULT
BLOW-OFF ASSEMBLY
STA: 159+49
SEE DWG NO. W-2

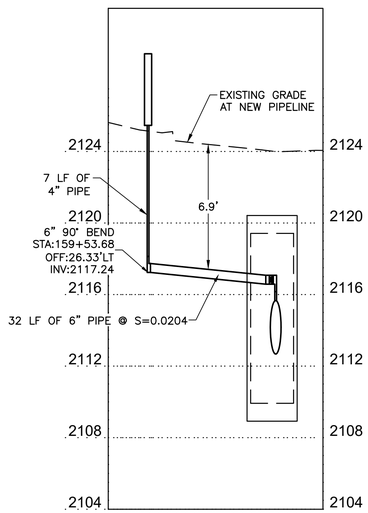

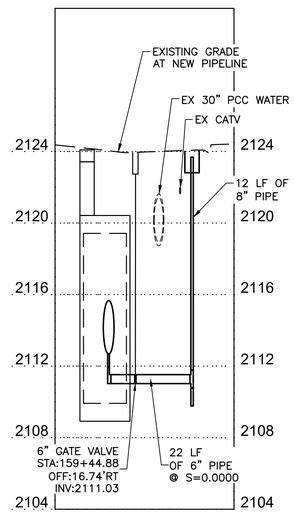

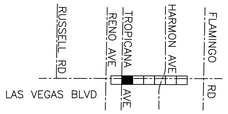

KEY MAP
NTS

CONSTRUCTION INDEX

70 INSTALL AIR RELEASE VALVE ASSEMBLY PER DETAIL 1 ON DWG WD-9

71 INSTALL BLOW-OFF ASSEMBLY PER DETAIL 2 ON DWG WD-9

77 INSTALL PROTECTIVE BOLLARD PER UDACS PLATE NO. 75 ON DWG WD-18

CONSTRUCTION NOTES

1 ALL TRENCH PER DETAILS ON DWG WD-1

2 SAWCUT AND/OR MATCH EXISTING GRADE. CONTRACTOR TO COORDINATE W/ CLARK COUNTY INSPECTOR FOR SAWCUT LOCATIONS

5 REPLACE "L" TYPE ISLAND CURB PER CCAUSD DWG. NO. 219

CATHODIC PROTECTION

7 INSTALL FLANGE INSULATING KIT PER DETAIL 1 ON DWG WD-22

FIRE DEPARTMENT APPROVAL

BY: _____ DATE: _____

APPROVAL OF THESE PLANS SHALL NOT BE CONSTRUED TO BE A PERMIT FOR, OR AN APPROVAL OF ANY VIOLATION OF ANY OF THE PROVISIONS OF STATE OR COUNTY LAWS.

APPROVAL OF THE FIRE DEPARTMENT HAVING JURISDICTION IS REQUIRED PRIOR TO OBTAINING FINAL APPROVAL FROM THE LAS VEGAS VALLEY WATER DISTRICT.

CCWRD APPROVAL

CLARK COUNTY WATER RECLAMATION DISTRICT DATE

CCWRD PIPES NUMBER IS 21955
SIGNATURE ON THESE PLANS SHALL NOT BE CONSTRUED TO BE A PERMIT FOR OR THE APPROVAL OF ANY VIOLATION OF CLARK COUNTY WATER RECLAMATION DISTRICT RULES, REGULATIONS, OR DESIGN AND CONSTRUCTION STANDARDS.

LVVWD APPROVAL

APPROVED FOR CONSTRUCTION

LAS VEGAS VALLEY WATER DISTRICT PLANNING AND ENGINEERING SERVICES

PROJECT No. 139055 FIRST APPROVED DATE _____

811 know what's below Call before you dig

SAFETY ALERT Call Before You Overhead 1-702-227-2929

UNION PACIFIC RAILROAD Call Before You Dig 1-800-336-9193

Call before you UnderGround 1-702-432-5300

NO.	REVISIONS	DATE
		APPROVED

CLARK COUNTY NEVADA

LAS VEGAS BLVD WATERLINE REPLACEMENT - TROPICANA AVE TO FLAMINGO RD (PHASE E/F)

36" VALVE VAULT - PLAN AND PROFILE STA 159+49

CLARK COUNTY, NEVADA, DEPARTMENT OF PUBLIC WORKS

PROFESSIONAL ENGINEER - STATE OF NEVADA
RAY P. MONTOYA
Exp. 12/31/2021
CIVIL
No. 025877
10/08/2021

PROJECT No: 500-897-LV-EF
DESIGNED BY: ROM/GAG
DRAWN BY: GAG/KAS/KMT
CHECKED BY: ALF/RPM/ROM
APPROVED BY _____

Kimley»Horn
6671 Las Vegas Boulevard South, Suite 320
Las Vegas, Nevada 89119
Tel. No.(702) 862-3600

SCALE
HORIZ: 1" = 20'
VERT: 1" = 4'
FIELD BOOK

DRAWING NO.
W-38
SHT. 43 OF 80
L-2304

LAS VEGAS BOULEVARD WATERLINE IMPROVEMENTS

User: Gerardo.Gonzalez
Path:K:\TUC_Waterlines\ces\036313000_LasVegasBlvd\CADD\LVB Phase E Water Plans\W38.dwg
Copyright © 2021 Kimley-Horn and Associates, Inc. Kimley-Horn's provided items, as its instruments of service, is intended only for the specific purpose and client for which it was prepared. Reuse of and improper reliance on this document without written authorization and adaptation by Kimley-Horn and Associates, Inc. shall be without liability to Kimley-Horn and Associates, Inc.

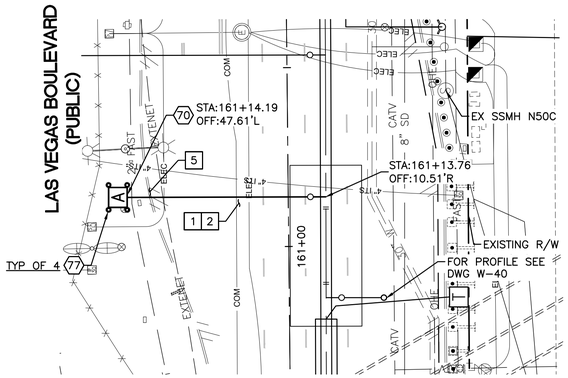

AIR VALVE ASSEMBLY
STA: 161+13.76
SEE DWG NO. W-2

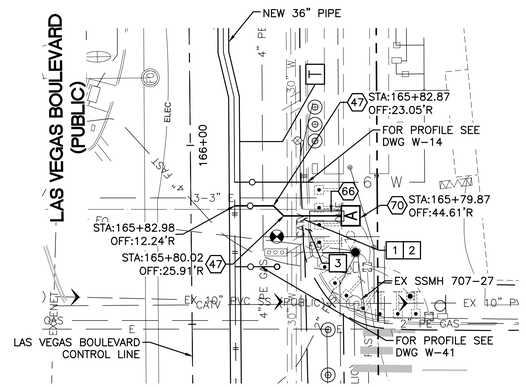

AIR VALVE ASSEMBLY
STA: 165+82.98
SEE DWG NO. W-3

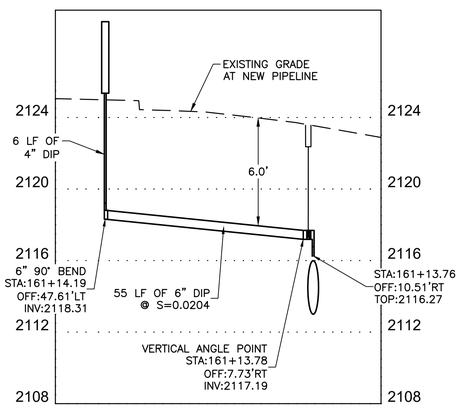

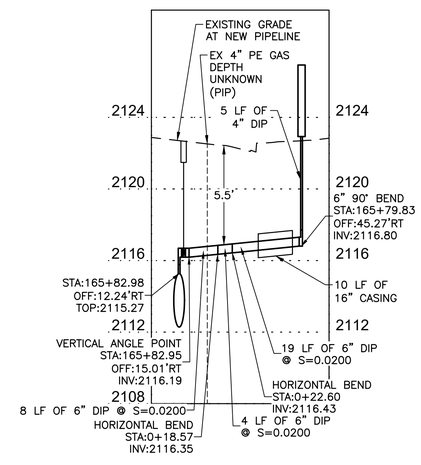

NORTH

GRAPHIC SCALE IN FEET
0 10 20 40

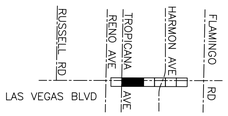

KEY MAP
NTS

CONSTRUCTION INDEX

- (47) INSTALL 6" X 45° BEND, RESTRAIN JOINTS
- (66) INSTALL PIPE CASING PER UDACS PLATE NOS. 22 & 23 ON DWG WD-14
- (70) INSTALL AIR RELEASE VALVE ASSEMBLY PER DETAIL 1 ON DWG WD-9
- (77) INSTALL PROTECTIVE BOLLARD PER UDACS PLATE NO. 75 ON DWG WD-18

CONSTRUCTION NOTES

1. ALL TRENCH PER DETAILS ON DWG WD-1
2. SAWCUT AND/OR MATCH EXISTING GRADE. CONTRACTOR TO COORDINATE W/ CLARK COUNTY INSPECTOR FOR SAWCUT LOCATIONS
3. REPLACE "L" TYPE CURB AND GUTTER PER CCAUSD DWG. NO. 216
5. REPLACE "L" TYPE ISLAND CURB PER CCAUSD DWG. NO. 219

FIRE DEPARTMENT APPROVAL

BY: _____ DATE: _____

APPROVAL OF THESE PLANS SHALL NOT BE CONSTRUED TO BE A PERMIT FOR, OR AN APPROVAL OF ANY VIOLATION OF ANY OF THE PROVISIONS OF STATE OR COUNTY LAWS.

APPROVAL OF THE FIRE DEPARTMENT HAVING JURISDICTION IS REQUIRED PRIOR TO OBTAINING FINAL APPROVAL FROM THE LAS VEGAS VALLEY WATER DISTRICT.

CCWRD APPROVAL

CLARK COUNTY WATER RECLAMATION DISTRICT DATE

CCWRD PIPES NUMBER IS 21955
SIGNATURE ON THESE PLANS SHALL NOT BE CONSTRUED TO BE A PERMIT FOR OR THE APPROVAL OF ANY VIOLATION OF CLARK COUNTY WATER RECLAMATION DISTRICT RULES, REGULATIONS, OR DESIGN AND CONSTRUCTION STANDARDS.

LVVWD APPROVAL

APPROVED FOR CONSTRUCTION

LAS VEGAS VALLEY WATER DISTRICT PLANNING AND ENGINEERING SERVICES

PROJECT No. 139055 FIRST APPROVED DATE _____

811 know what's below Call before you dig

SAFETY ALERT Call Before You Overhead 1-702-227-2929

UNION PACIFIC RAILROAD Call Before You Dig 1-800-336-9193

Call before you UnderGround 1-702-492-5300 FEDERAL AND NATIONAL SYSTEM OF TRANSPORTATION

NO.	REVISIONS	DATE
		APPROVED

CLARK COUNTY NEVADA

LAS VEGAS BLVD WATERLINE REPLACEMENT - TROPICANA AVE TO FLAMINGO RD (PHASE E/F)

36" WATER MAIN - AIR VALVE ASSEMBLY PLAN AND PROFILE STA 161+13 & STA 165+82

CLARK COUNTY, NEVADA, DEPARTMENT OF PUBLIC WORKS

PROFESSIONAL ENGINEER - STATE OF NEVADA
RAY P. MONTOYA
Exp. 12/31/2021
CIVIL
No.025817
10/08/2021

PROJECT No: 500-897-LV-EF DRAWN BY: GAG/KAS/KMT
DESIGNED BY: ROM/GAG CHECKED BY: ALF/RPM/ROM
APPROVED BY _____

Kimley»Horn
6671 Las Vegas Boulevard South, Suite 320
Las Vegas, Nevada 89119
Tel. No.(702) 862-3600

SCALE
HORIZ: 1" = 20'
VERT: 1" = 4'
FIELD BOOK

DRAWING NO.
W-39
SHT. 44 OF 80
L-2304

LAS VEGAS BOULEVARD WATERLINE IMPROVEMENTS

User: Gerardo.Gonzalez
Path: K:\TUC_Waterresources\065813000_Lasvegasblvd\CADD\40 Phase E Water Plans\W39.dwg
Reuse of and improper reliance on this document without written authorization and adaptation by Kimley-Horn and Associates, Inc. shall be without liability to Kimley-Horn and Associates, Inc.
Copyright © 2021 Kimley-Horn and Associates, Inc. This document, together with the concepts and designs presented herein, as an instrument of service, is intended only for the specific purpose and client for which it was prepared.

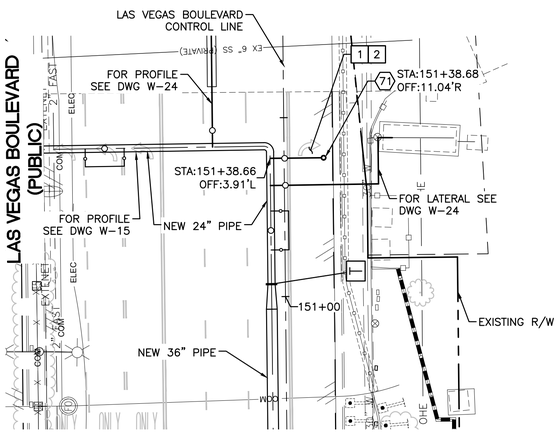

BLOW-OFF ASSEMBLY
STA: 151+38.66
SEE DWG NO. W-1

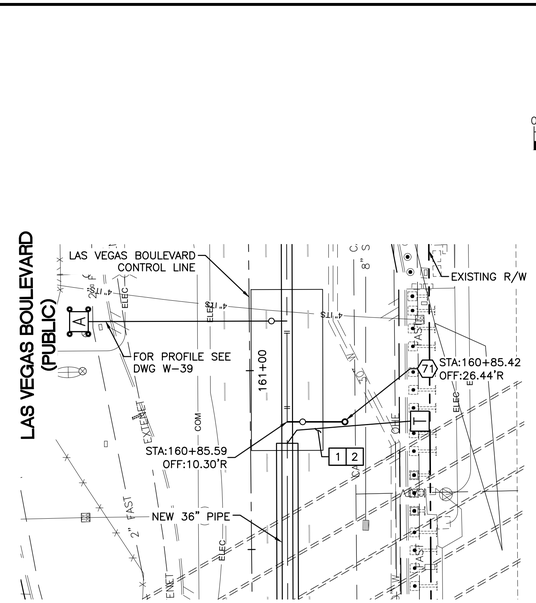

BLOW-OFF ASSEMBLY
STA: 160+85.59
SEE DWG NO. W-2

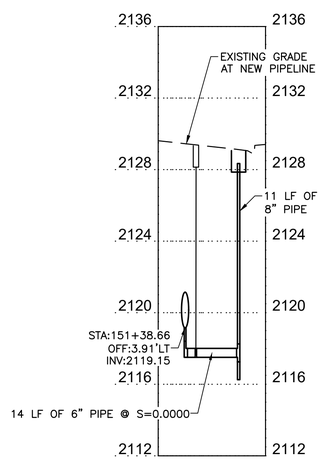

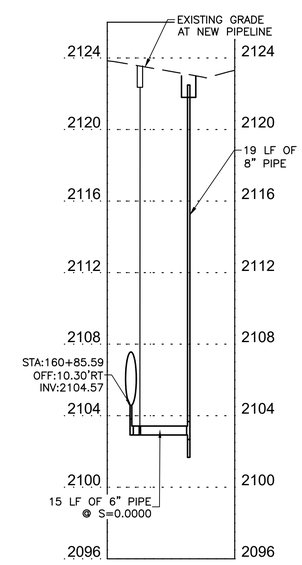

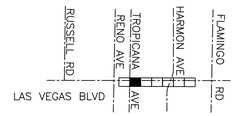

KEY MAP
NTS

CONSTRUCTION INDEX

71 INSTALL BLOW-OFF ASSEMBLY PER DETAIL 2 ON DWG WD-9

CONSTRUCTION NOTES

1. ALL TRENCH PER DETAILS ON DWG WD-1
2. SAWCUT AND/OR MATCH EXISTING GRADE. CONTRACTOR TO COORDINATE W/ CLARK COUNTY INSPECTOR FOR SAWCUT LOCATIONS

FIRE DEPARTMENT APPROVAL

BY: _____ DATE: _____

APPROVAL OF THESE PLANS SHALL NOT BE CONSTRUED TO BE A PERMIT FOR, OR AN APPROVAL OF ANY VIOLATION OF ANY OF THE PROVISIONS OF STATE OR COUNTY LAWS.

APPROVAL OF THE FIRE DEPARTMENT HAVING JURISDICTION IS REQUIRED PRIOR TO OBTAINING FINAL APPROVAL FROM THE LAS VEGAS VALLEY WATER DISTRICT.

CCWRD APPROVAL

CLARK COUNTY WATER RECLAMATION DISTRICT DATE

CCWRD PIPES NUMBER IS 21,955.
SIGNATURE ON THESE PLANS SHALL NOT BE CONSTRUED TO BE A PERMIT FOR OR THE APPROVAL OF ANY VIOLATION OF CLARK COUNTY WATER RECLAMATION DISTRICT RULES, REGULATIONS, OR DESIGN AND CONSTRUCTION STANDARDS.

LVVWD APPROVAL

APPROVED FOR CONSTRUCTION

LAS VEGAS VALLEY WATER DISTRICT PLANNING AND ENGINEERING SERVICES

PROJECT No. 139055 FIRST APPROVED DATE _____

811 know what's below Call before you dig

SAFETY ALERT Call Before You Overhead 1-702-227-2929

UNION PACIFIC RAILROAD Call Before You Dig 1-800-336-9193

Call before you UnderGround 1-702-432-5300

NO.	REVISIONS	DATE
		APPROVED

CLARK COUNTY NEVADA

LAS VEGAS BLVD WATERLINE REPLACEMENT - TROPICANA AVE TO FLAMINGO RD (PHASE E/F)

36" WATER MAIN - BLOW-OFF ASSEMBLY PLAN AND PROFILE STA 151+38 & STA 160+85

CLARK COUNTY, NEVADA, DEPARTMENT OF PUBLIC WORKS

PROFESSIONAL ENGINEER - STATE OF NEVADA
RAY P. MONTOYA
Exp. 12/31/2021
CIVIL
No. 025877
10/08/2021

PROJECT No: 500-897-LV-EF
DESIGNED BY: ROM/GAG
APPROVED BY _____
DRAWN BY: GAG/KAS/KMT
CHECKED BY: ALF/RPM/ROM

Kimley»Horn
6671 Las Vegas Boulevard South, Suite 320
Las Vegas, Nevada 89119
Tel. No.(702) 862-3600

SCALE
HORIZ: 1" = 20'
VERT: 1" = 4'
FIELD BOOK

DRAWING NO.
W-40
SHT. 45 OF 80
L-2304

LAS VEGAS BOULEVARD WATERLINE IMPROVEMENTS

User: Gerardo.Gonzalez
Path: K:\LVL_Water\Resources\069313000_Lasvegasblvd\CADD\LVB Phase E Water Plans\W40-W41.dwg
Kimley-Horn and Associates, Inc. shall be without liability to Kimley-Horn and Associates, Inc. Reuse of and improper reliance on this document without written authorization and adaptation by Kimley-Horn and Associates, Inc. shall be without liability to Kimley-Horn and Associates, Inc.

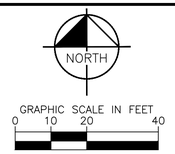

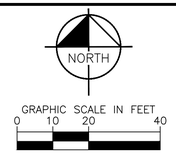

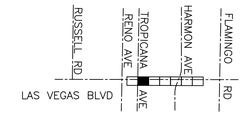

KEY MAP
NTS

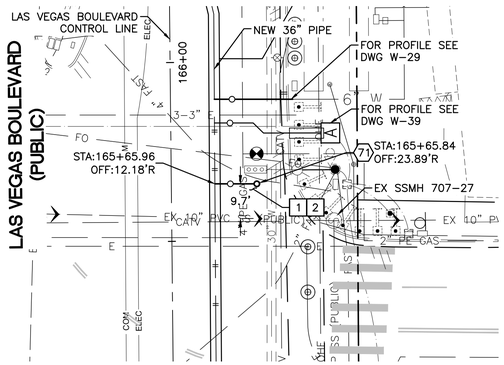

BLOW-OFF ASSEMBLY
STA: 165+65.96
SEE DWG NO. W-3

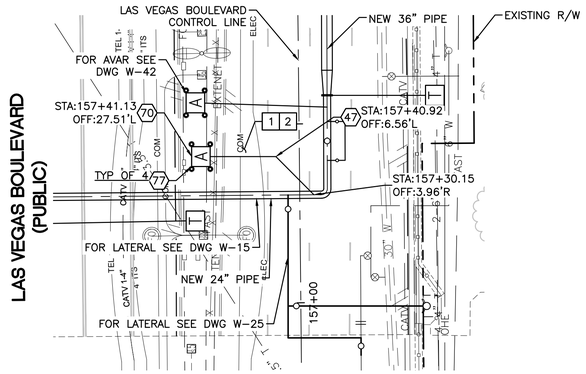

AIR VALVE ASSEMBLY
STA: 157+30.15
SEE DWG NO. W-15

CONSTRUCTION INDEX

- (47) INSTALL 6" X 45° BEND, RESTRAIN JOINTS
- (70) INSTALL AIR RELEASE VALVE ASSEMBLY PER DETAIL 1 ON DWG WD-9
- (71) INSTALL BLOW-OFF ASSEMBLY PER DETAIL 2 ON DWG WD-9
- (77) INSTALL PROTECTIVE BOLLARD PER UDACS PLATE NO. 75 ON DWG WD-18

CONSTRUCTION NOTES

1. ALL TRENCH PER DETAILS ON DWG WD-1
2. SAWCUT AND/OR MATCH EXISTING GRADE. CONTRACTOR TO COORDINATE W/ CLARK COUNTY INSPECTOR FOR SAWCUT LOCATIONS

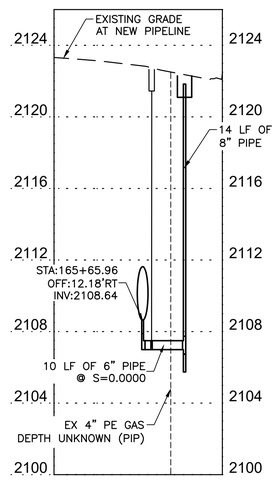

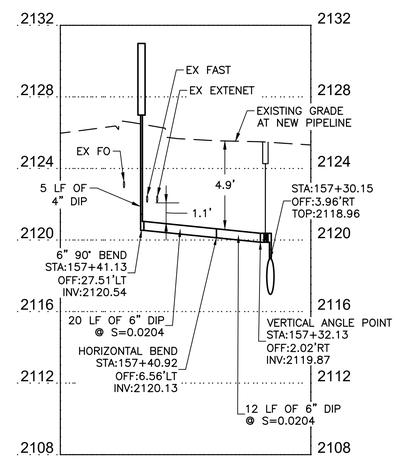

FIRE DEPARTMENT APPROVAL

BY: _____ DATE: _____

APPROVAL OF THESE PLANS SHALL NOT BE CONSTRUED TO BE A PERMIT FOR, OR AN APPROVAL OF ANY VIOLATION OF ANY OF THE PROVISIONS OF STATE OR COUNTY LAWS.

APPROVAL OF THE FIRE DEPARTMENT HAVING JURISDICTION IS REQUIRED PRIOR TO OBTAINING FINAL APPROVAL FROM THE LAS VEGAS VALLEY WATER DISTRICT.

CCWRD APPROVAL

CLARK COUNTY WATER RECLAMATION DISTRICT DATE

CCWRD PIPES NUMBER IS 21955.
SIGNATURE ON THESE PLANS SHALL NOT BE CONSTRUED TO BE A PERMIT FOR OR THE APPROVAL OF ANY VIOLATION OF CLARK COUNTY WATER RECLAMATION DISTRICT RULES, REGULATIONS, OR DESIGN AND CONSTRUCTION STANDARDS.

LVVWD APPROVAL

APPROVED FOR CONSTRUCTION

LAS VEGAS VALLEY WATER DISTRICT PLANNING AND ENGINEERING SERVICES

PROJECT No. 139055 FIRST APPROVED DATE _____

811 know what's below Call before you dig

SAFETY ALERT Call Before You Overhead 1-702-227-2929

UNION PACIFIC RAILROAD Call Before You Dig 1-800-336-9193

Call before you UnderGround 1-702-432-5300

NO.	REVISIONS	DATE
		APPROVED

CLARK COUNTY NEVADA

LAS VEGAS BLVD WATERLINE REPLACEMENT - TROPICANA AVE TO FLAMINGO RD (PHASE E/F)

36" & 24" WATER MAIN - BLOW OFF & AIR VALVE ASSEMBLY PLAN AND PROFILE
STA 165+65 & STA 157+30

CLARK COUNTY, NEVADA, DEPARTMENT OF PUBLIC WORKS

PROFESSIONAL ENGINEER - STATE OF NEVADA
RAY P. MONTOYA
Exp. 12/31/2021
CIVIL
No.025877
10/08/2021

PROJECT No: 500-897-LV-EF
DESIGNED BY: ROM/GAG
APPROVED BY
DRAWN BY: GAG/KAS/KMT
CHECKED BY: ALF/RPM/ROM

Kimley»Horn
6671 Las Vegas Boulevard South, Suite 320
Las Vegas, Nevada 89119
Tel. No.(702) 862-3600

SCALE
HORIZ: 1" = 20'
VERT: 1" = 4'
FIELD BOOK

DRAWING NO.
W-41
SHT. 46 OF 80
L-2304

LAS VEGAS BOULEVARD WATERLINE IMPROVEMENTS

User: Gerardo.Gonzalez
Path: K:\Civil_Water\Resources\098513000_Lasvegasblvd\CADD\LVB Phase E Water Plans\W40-W41.dwg
Kimley-Horn and Associates, Inc. shall not be responsible for any modifications or alterations to this document without written authorization and adaptation by Kimley-Horn and Associates, Inc. shall be without liability to Kimley-Horn and Associates, Inc.
Reuse of and improper reliance on this document without written authorization and adaptation by Kimley-Horn and Associates, Inc. shall be without liability to Kimley-Horn and Associates, Inc.
Document is intended only for the specific purpose and client for which it was prepared.

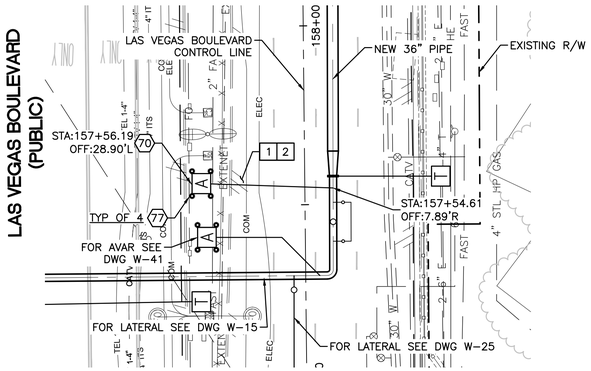

AIR VALVE ASSEMBLY
STA: 157+54.61
SEE DWG NO. W-2

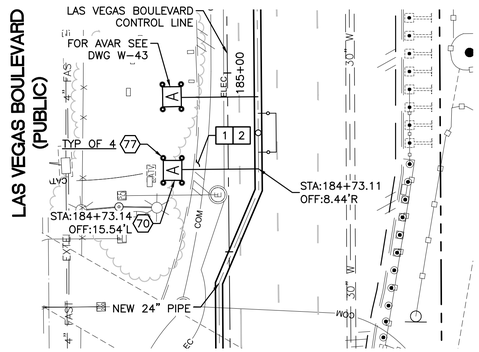

AIR VALVE ASSEMBLY
STA: 184+73.11
SEE DWG NO. W-5

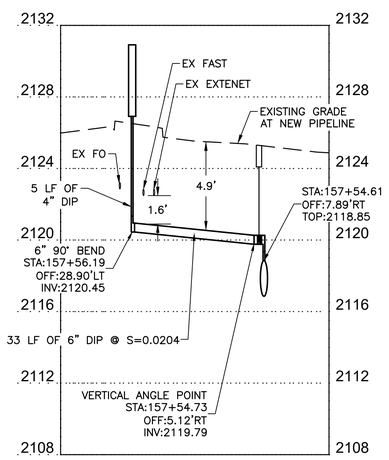

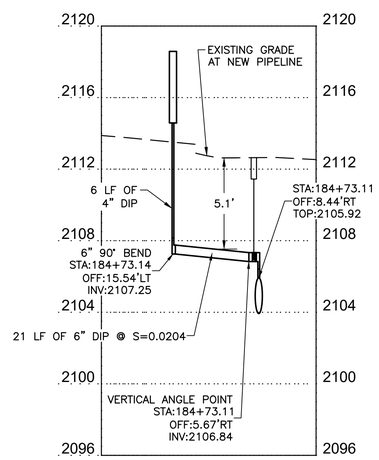

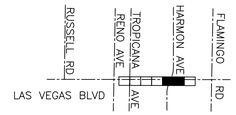

KEY MAP
NTS

CONSTRUCTION INDEX

70 INSTALL AIR RELEASE VALVE ASSEMBLY PER DETAIL 1 ON DWG WD-9

77 INSTALL PROTECTIVE BOLLARD PER UDACS PLATE NO. 75 ON DWG WD-18

CONSTRUCTION NOTES

1 ALL TRENCH PER DETAILS ON DWG WD-1

2 SAWCUT AND/OR MATCH EXISTING GRADE. CONTRACTOR TO COORDINATE W/ CLARK COUNTY INSPECTOR FOR SAWCUT LOCATIONS

FIRE DEPARTMENT APPROVAL

BY: _____ DATE: _____

APPROVAL OF THESE PLANS SHALL NOT BE CONSTRUED TO BE A PERMIT FOR, OR AN APPROVAL OF ANY VIOLATION OF ANY OF THE PROVISIONS OF STATE OR COUNTY LAWS.

APPROVAL OF THE FIRE DEPARTMENT HAVING JURISDICTION IS REQUIRED PRIOR TO OBTAINING FINAL APPROVAL FROM THE LAS VEGAS VALLEY WATER DISTRICT.

CCWRD APPROVAL

CLARK COUNTY WATER RECLAMATION DISTRICT DATE

CCWRD PIPES NUMBER IS 21955.
SIGNATURE ON THESE PLANS SHALL NOT BE CONSTRUED TO BE A PERMIT FOR OR THE APPROVAL OF ANY VIOLATION OF CLARK COUNTY WATER RECLAMATION DISTRICT RULES, REGULATIONS, OR DESIGN AND CONSTRUCTION STANDARDS.

LVVWD APPROVAL

APPROVED FOR CONSTRUCTION

LAS VEGAS VALLEY WATER DISTRICT PLANNING AND ENGINEERING SERVICES

PROJECT No. 139055 FIRST APPROVED DATE _____

811 know what's below Call before you dig

SAFETY ALERT Call Before You Overhead 1-702-227-2929

UNION PACIFIC RAILROAD Call Before You Dig 1-800-336-9193

Call before you UnderGround 1-702-432-5300 FREEWAY AND ARTERIAL SYSTEM OF TRANSPORTATION

NO.	REVISIONS	DATE
		APPROVED

CLARK COUNTY NEVADA

LAS VEGAS BLVD WATERLINE REPLACEMENT - TROPICANA AVE TO FLAMINGO RD (PHASE E/F)

24" WATER MAIN - AIR VALVE ASSEMBLY PLAN AND PROFILE STA 157+54 & STA 184+73

CLARK COUNTY, NEVADA, DEPARTMENT OF PUBLIC WORKS

PROFESSIONAL ENGINEER - STATE OF NEVADA
RAY P. MONTOYA
Exp. 12/31/2021
CIVIL
No.025877
10/08/2021

PROJECT No: 500-897-LV-EF
DRAWN BY: GAG/KAS/KMT
DESIGNED BY: ROM/GAG
CHECKED BY: ALF/RPM/ROM
APPROVED BY _____

Kimley»Horn
6671 Las Vegas Boulevard South, Suite 320
Las Vegas, Nevada 89119
Tel. No.(702) 862-3600

SCALE
HORIZ: 1" = 20'
VERT: 1" = 4'
FIELD BOOK

DRAWING NO.
W-42
SHT. 47 OF 80
L-2304

LAS VEGAS BOULEVARD WATERLINE IMPROVEMENTS

User: Karli.Timin
Path: K:\TUC_Water\Resources\095513000_Lasvegasblvd\CADD\LAB Phase E Water Plans\W42-W43.dwg
Kimley-Horn and Associates, Inc. shall be without liability to Kimley-Horn and Associates, Inc. Reuse of and improper reliance on this document without written authorization and adaptation by Kimley-Horn and Associates, Inc. shall be without liability to Kimley-Horn and Associates, Inc.
Copyright © 2021 Kimley-Horn and Associates, Inc.

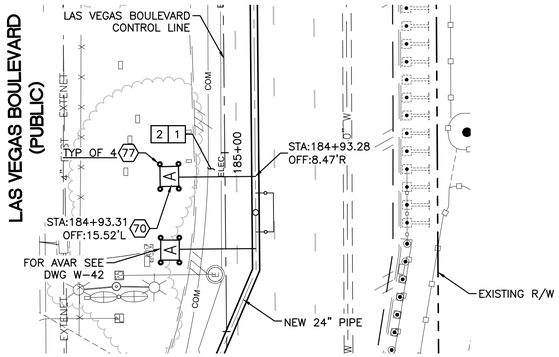

AIR VALVE ASSEMBLY
STA: 184+93.28
SEE DWG NO. W-5

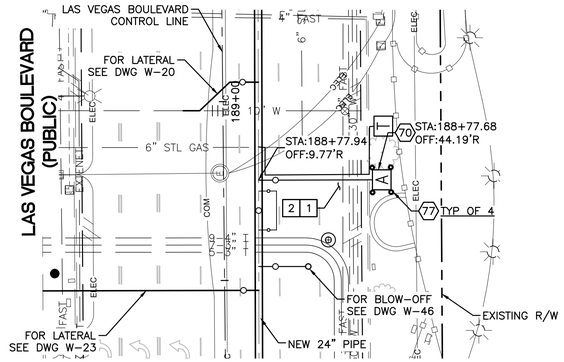

AIR VALVE ASSEMBLY
STA: 188+77.94
SEE DWG NO. W-6

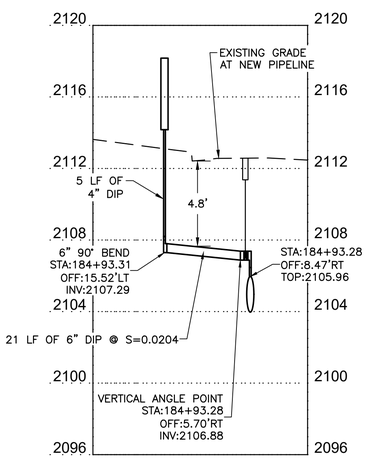

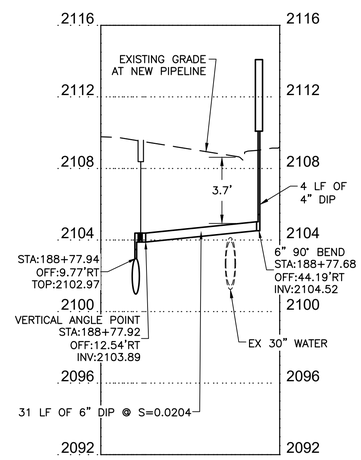

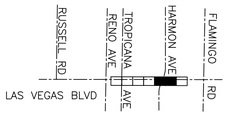

KEY MAP
NTS

CONSTRUCTION INDEX

70 INSTALL AIR RELEASE VALVE ASSEMBLY PER DETAIL 1 ON DWG WD-9

77 INSTALL PROTECTIVE BOLLARD PER UDACS PLATE NO. 75 ON DWG WD-18

CONSTRUCTION NOTES

1. ALL TRENCH PER DETAILS ON DWG WD-1
2. SAWCUT AND/OR MATCH EXISTING GRADE. CONTRACTOR TO COORDINATE W/ CLARK COUNTY INSPECTOR FOR SAWCUT LOCATIONS

FIRE DEPARTMENT APPROVAL

BY: _____ DATE: _____

APPROVAL OF THESE PLANS SHALL NOT BE CONSTRUED TO BE A PERMIT FOR, OR AN APPROVAL OF ANY VIOLATION OF ANY OF THE PROVISIONS OF STATE OR COUNTY LAWS.

APPROVAL OF THE FIRE DEPARTMENT HAVING JURISDICTION IS REQUIRED PRIOR TO OBTAINING FINAL APPROVAL FROM THE LAS VEGAS VALLEY WATER DISTRICT.

CCWRD APPROVAL

CLARK COUNTY WATER RECLAMATION DISTRICT DATE

CCWRD PIPES NUMBER IS 21955.
SIGNATURE ON THESE PLANS SHALL NOT BE CONSTRUED TO BE A PERMIT FOR OR THE APPROVAL OF ANY VIOLATION OF CLARK COUNTY WATER RECLAMATION DISTRICT RULES, REGULATIONS, OR DESIGN AND CONSTRUCTION STANDARDS.

LVVWD APPROVAL

APPROVED FOR CONSTRUCTION

LAS VEGAS VALLEY WATER DISTRICT PLANNING AND ENGINEERING SERVICES

PROJECT No. 139055 FIRST APPROVED DATE _____

811 know what's below Call before you dig

SAFETY ALERT Call Before You Overhead 1-702-227-2929

UNION PACIFIC RAILROAD Call Before You Dig 1-800-336-9193

Call before you UnderGround 1-702-432-5300

NO.	REVISIONS	DATE
		APPROVED

CLARK COUNTY NEVADA

LAS VEGAS BLVD WATERLINE REPLACEMENT - TROPICANA AVE TO FLAMINGO RD (PHASE E/F)

24" WATER MAIN - AIR VALVE ASSEMBLY PLAN AND PROFILE STA 184+93 & 188+77

CLARK COUNTY, NEVADA, DEPARTMENT OF PUBLIC WORKS

PROFESSIONAL ENGINEER - STATE OF NEVADA
RAY P. MONTOYA
Exp. 12/31/2021
CIVIL
No.025877
10/08/2021

PROJECT No: 500-897-LV-EF
DESIGNED BY: ROM/GAG
APPROVED BY
DRAWN BY: GAG/KAS/KMT
CHECKED BY: ALF/RPM/ROM

Kimley»Horn
6671 Las Vegas Boulevard South, Suite 320
Las Vegas, Nevada 89119
Tel. No.(702) 862-3600

SCALE
HORIZ: 1" = 20'
VERT: 1" = 4'
FIELD BOOK

DRAWING NO.
W-43
SHT. 48 OF 80
L-2304

LAS VEGAS BOULEVARD WATERLINE IMPROVEMENTS

User: Gerardo.Gonzalez
Path: K:\TUC_WaterResources\068513000_LasVegasBlvd\CADD\LVB Phase E Water Plans\W42-W43.dwg
Kimley-Horn and Associates, Inc. makes no representation as to the accuracy or completeness of this document, and is intended only for the specific purpose and client for which it was prepared. Reuse of and improper reliance on this document without written authorization and adaptation by Kimley-Horn and Associates, Inc. shall be without liability to Kimley-Horn and Associates, Inc.

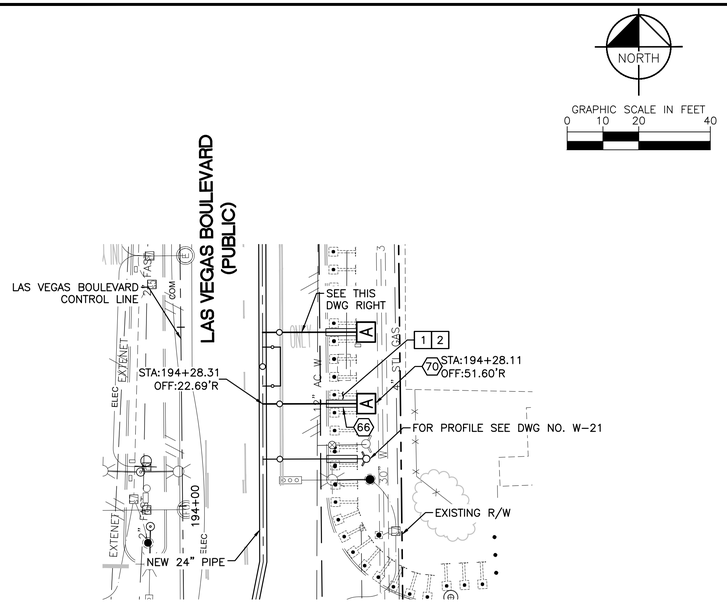

AIR VALVE ASSEMBLY
STA: 194+28.31
SEE DWG NO. W-7

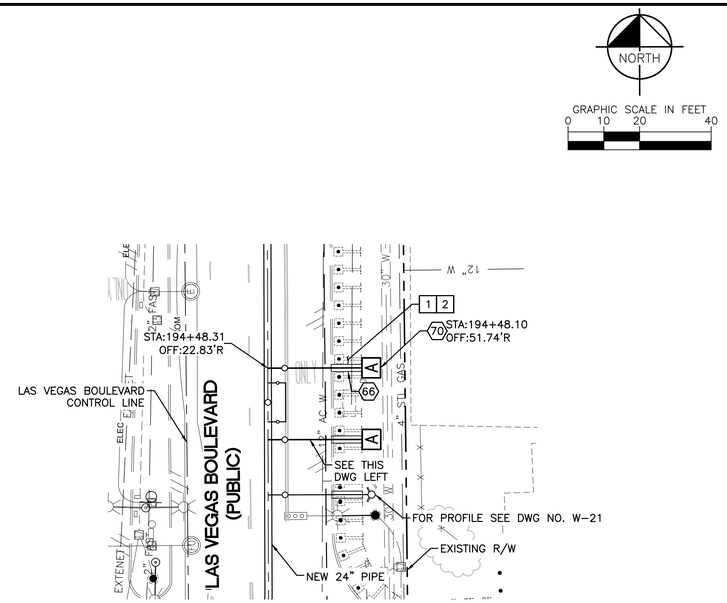

AIR VALVE ASSEMBLY
STA: 194+48.31
SEE DWG NO. W-7

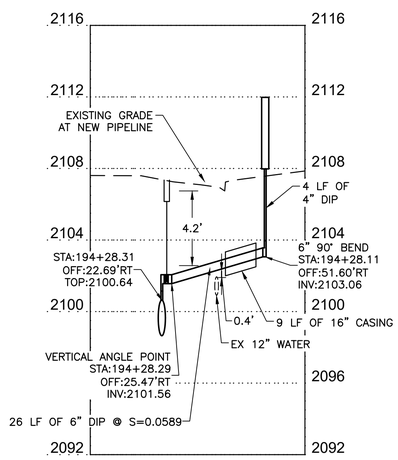

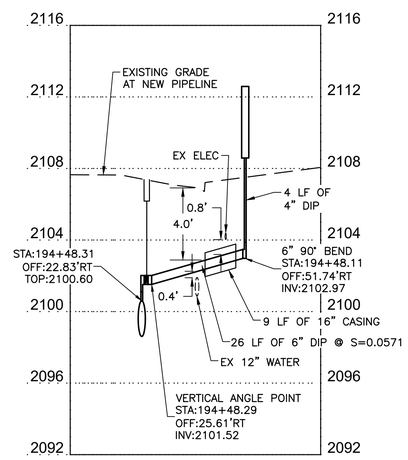

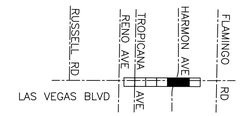

KEY MAP
NTS

CONSTRUCTION INDEX

66 INSTALL PIPE CASING PER UDACS PLATE NOS. 22 & 23 ON DWG WD-14

70 INSTALL AIR RELEASE VALVE ASSEMBLY PER DETAIL 1 ON DWG WD-9

CONSTRUCTION NOTES

1 ALL TRENCH PER DETAILS ON DWG WD-1

2 SAWCUT AND/OR MATCH EXISTING GRADE. CONTRACTOR TO COORDINATE W/ CLARK COUNTY INSPECTOR FOR SAWCUT LOCATIONS

FIRE DEPARTMENT APPROVAL

BY: _____ DATE: _____

APPROVAL OF THESE PLANS SHALL NOT BE CONSTRUED TO BE A PERMIT FOR, OR AN APPROVAL OF ANY VIOLATION OF ANY OF THE PROVISIONS OF STATE OR COUNTY LAWS.

APPROVAL OF THE FIRE DEPARTMENT HAVING JURISDICTION IS REQUIRED PRIOR TO OBTAINING FINAL APPROVAL FROM THE LAS VEGAS VALLEY WATER DISTRICT.

CCWRD APPROVAL

CLARK COUNTY WATER RECLAMATION DISTRICT DATE

CCWRD PIPES NUMBER IS 21,955.
SIGNATURE ON THESE PLANS SHALL NOT BE CONSTRUED TO BE A PERMIT FOR OR THE APPROVAL OF ANY VIOLATION OF CLARK COUNTY WATER RECLAMATION DISTRICT RULES, REGULATIONS, OR DESIGN AND CONSTRUCTION STANDARDS.

LVVWD APPROVAL

APPROVED FOR CONSTRUCTION

LAS VEGAS VALLEY WATER DISTRICT PLANNING AND ENGINEERING SERVICES

PROJECT No. 139055 FIRST APPROVED DATE _____

811 know what's below Call before you dig

SAFETY ALERT Call Before You Overhead 1-702-227-2929

UNION PACIFIC RAILROAD Call Before You Dig 1-800-336-9193

Call before you UnderGround 1-702-432-5300

NO.	REVISIONS	DATE
		APPROVED

CLARK COUNTY NEVADA

LAS VEGAS BLVD WATERLINE REPLACEMENT - TROPICANA AVE TO FLAMINGO RD (PHASE E/F)

24" WATER MAIN - AIR VALVE ASSEMBLY PLAN AND PROFILE STA 194+28 & STA 194+48

CLARK COUNTY, NEVADA, DEPARTMENT OF PUBLIC WORKS

PROFESSIONAL ENGINEER - STATE OF NEVADA
RAY P. MONTOYA
Exp. 12/31/2021
CIVIL
No. 025877
10/08/2021

PROJECT No: 500-897-LV-EF DRAWN BY: GAG/KAS/KMT
DESIGNED BY: ROM/GAG CHECKED BY: ALF/RPM/ROM
APPROVED BY _____

Kimley»Horn
6671 Las Vegas Boulevard South, Suite 320
Las Vegas, Nevada 89119
Tel. No.(702) 862-3600

SCALE
HORIZ: 1" = 20'
VERT: 1" = 4'
FIELD BOOK

DRAWING NO.
W-44
SHT. 49 OF 80
L-2304

LAS VEGAS BOULEVARD WATERLINE IMPROVEMENTS

Copyright © 2021 Kimley-Horn and Associates, Inc. This document is intended only for the specific purpose and client for which it was prepared. Reuse of and improper reliance on this document without written authorization and adaptation by Kimley-Horn and Associates, Inc. shall be without liability to Kimley-Horn and Associates, Inc.

User: Kari.Smith
Path: K:\TUC_Water\Resources\069313000_LasVegasBlvd\CADD\LVB Phase E Water Plans\W44.dwg

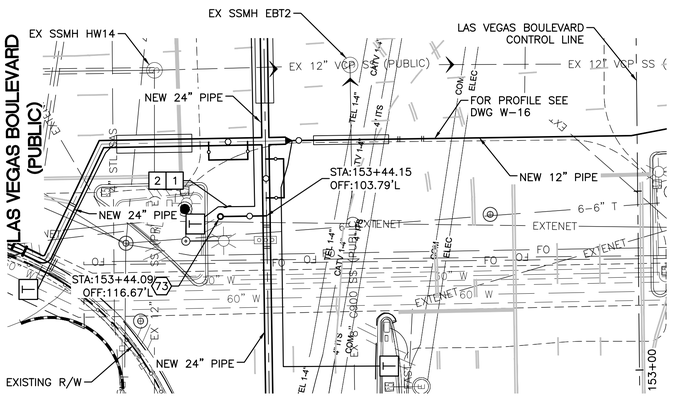

BLOW-OFF ASSEMBLY
STA: 153+44.15
SEE DWG NO. W-9

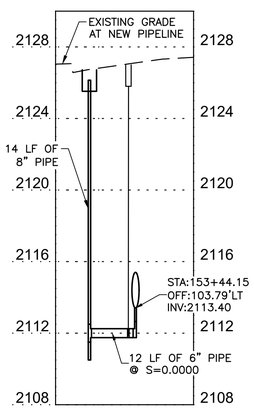

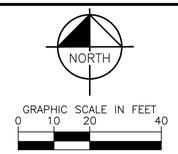

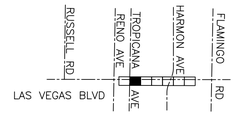

KEY MAP
NTS

CONSTRUCTION INDEX

73 INSTALL 6" BLOW-OFF ASSEMBLY PER UDACS PLATE 37 ON DWG WD-16

CONSTRUCTION NOTES

1. ALL TRENCH PER DETAILS ON DWG WD-1
2. SAWCUT AND/OR MATCH EXISTING GRADE. CONTRACTOR TO COORDINATE W/ CLARK COUNTY INSPECTOR FOR SAWCUT LOCATIONS

FIRE DEPARTMENT APPROVAL

BY: _____ DATE: _____

APPROVAL OF THESE PLANS SHALL NOT BE CONSTRUED TO BE A PERMIT FOR, OR AN APPROVAL OF ANY VIOLATION OF ANY OF THE PROVISIONS OF STATE OR COUNTY LAWS.

APPROVAL OF THE FIRE DEPARTMENT HAVING JURISDICTION IS REQUIRED PRIOR TO OBTAINING FINAL APPROVAL FROM THE LAS VEGAS VALLEY WATER DISTRICT.

CCWRD APPROVAL

CLARK COUNTY WATER RECLAMATION DISTRICT DATE

CCWRD PIPES NUMBER IS 21,955.
SIGNATURE ON THESE PLANS SHALL NOT BE CONSTRUED TO BE A PERMIT FOR OR THE APPROVAL OF ANY VIOLATION OF CLARK COUNTY WATER RECLAMATION DISTRICT RULES, REGULATIONS, OR DESIGN AND CONSTRUCTION STANDARDS.

LVVWD APPROVAL

APPROVED FOR CONSTRUCTION

LAS VEGAS VALLEY WATER DISTRICT PLANNING AND ENGINEERING SERVICES

PROJECT No. 139055 FIRST APPROVED DATE _____

811 know what's below Call before you dig

SAFETY ALERT Call Before You Overhead 1-702-227-2929

UNION PACIFIC RAILROAD Call Before You Dig 1-800-336-9193

Call before you UnderGround 1-702-432-5300

NO.	REVISIONS	DATE
		APPROVED

LAS VEGAS BLVD WATERLINE REPLACEMENT - TROPICANA AVE TO FLAMINGO RD (PHASE E/F)

24" WATER MAIN - BLOW-OFF ASSEMBLY PLAN AND PROFILE STA 153+44

CLARK COUNTY, NEVADA, DEPARTMENT OF PUBLIC WORKS

PROFESSIONAL ENGINEER - STATE OF NEVADA
RAY P. MONTOYA
Exp. 12/31/2021
CIVIL
No.025877
10/08/2021

PROJECT No: 500-897-LV-EF
DESIGNED BY: ROM/GAG
APPROVED BY
DRAWN BY: GAG/KAS/KMT
CHECKED BY: ALF/RPM/ROM

Kimley»Horn
6671 Las Vegas Boulevard South Suite 320
Las Vegas, Nevada 89119
Tel. No.(702) 862-3600

SCALE
HORIZ: 1" = 20'
VERT: 1" = 4'
FIELD BOOK

DRAWING NO.
W-45
SHT. 50 OF 80
L-2304

LAS VEGAS BOULEVARD WATERLINE IMPROVEMENTS

User: Gerardo.Gonzalez
Path: K:\TUC_Water\Resources\096513000_Lasvegasblvd\CADD\LAB Phase E Water Plans\W45-W47.dwg
Kimley-Horn and Associates, Inc. makes no representations or warranties, and assumes no responsibility for any reuse or modification of this drawing. It is intended only for the specific purpose and client for which it was prepared. Reuse of and improper reliance on this document without written authorization and adaptation by Kimley-Horn and Associates, Inc. shall be without liability to Kimley-Horn and Associates, Inc.

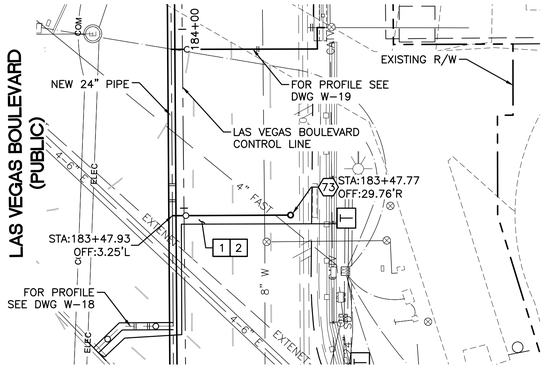

BLOW-OFF ASSEMBLY
STA: 183+47.93
SEE DWG NO. W-5

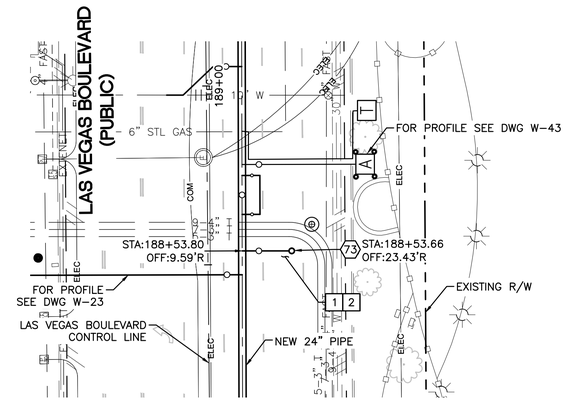

BLOW-OFF ASSEMBLY
STA: 188+53.80
SEE DWG NO. W-6

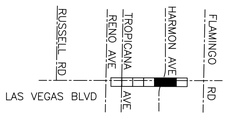

KEY MAP
NTS

CONSTRUCTION INDEX

73 INSTALL 6" BLOW-OFF ASSEMBLY PER UDACS PLATE 37 ON DWG WD-16

CONSTRUCTION NOTES

1 ALL TRENCH PER DETAILS ON DWG WD-1

2 SAWCUT AND/OR MATCH EXISTING GRADE. CONTRACTOR TO COORDINATE W/ CLARK COUNTY INSPECTOR FOR SAWCUT LOCATIONS

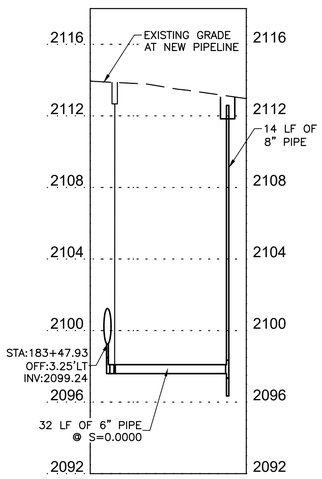

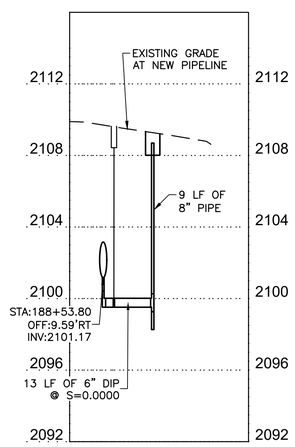

FIRE DEPARTMENT APPROVAL

BY: _____ DATE: _____

APPROVAL OF THESE PLANS SHALL NOT BE CONSTRUED TO BE A PERMIT FOR, OR AN APPROVAL OF ANY VIOLATION OF ANY OF THE PROVISIONS OF STATE OR COUNTY LAWS.

APPROVAL OF THE FIRE DEPARTMENT HAVING JURISDICTION IS REQUIRED PRIOR TO OBTAINING FINAL APPROVAL FROM THE LAS VEGAS VALLEY WATER DISTRICT.

CCWRD APPROVAL

CLARK COUNTY WATER RECLAMATION DISTRICT DATE

CCWRD PIPES NUMBER IS 21,955.
SIGNATURE ON THESE PLANS SHALL NOT BE CONSTRUED TO BE A PERMIT FOR OR THE APPROVAL OF ANY VIOLATION OF CLARK COUNTY WATER RECLAMATION DISTRICT RULES, REGULATIONS, OR DESIGN AND CONSTRUCTION STANDARDS.

LVVWD APPROVAL

APPROVED FOR CONSTRUCTION

LAS VEGAS VALLEY WATER DISTRICT PLANNING AND ENGINEERING SERVICES

PROJECT No. 139055 FIRST APPROVED DATE _____

811 know what's below Call before you dig

SAFETY ALERT Call Before You Overhead 1-702-227-2929

UNION PACIFIC RAILROAD Call Before You Dig 1-800-336-9193

Call before you UnderGround 1-702-432-5300

NO.	REVISIONS	DATE
		APPROVED

CLARK COUNTY NEVADA

LAS VEGAS BLVD WATERLINE REPLACEMENT - TROPICANA AVE TO FLAMINGO RD (PHASE E/F)

24" WATER MAIN - BLOW-OFF ASSEMBLY PLAN AND PROFILE STA 183+47 & STA 188+53

CLARK COUNTY, NEVADA, DEPARTMENT OF PUBLIC WORKS

PROFESSIONAL ENGINEER - STATE OF NEVADA
RAY P. MONTOYA
Exp. 12/31/2021
CIVIL
No. 025877
10/08/2021

PROJECT No: 500-897-LV-EF DRAWN BY: GAG/KAS/KMT
DESIGNED BY: ROM/GAG CHECKED BY: ALF/RPM/ROM
APPROVED BY _____

Kimley»Horn
6671 Las Vegas Boulevard South, Suite 320
Las Vegas, Nevada 89119
Tel. No.(702) 862-3600

SCALE
HORIZ: 1" = 20'
VERT: 1" = 4'
FIELD BOOK

DRAWING NO.
W-46
SHT. 51 OF 80
L-2304

LAS VEGAS BOULEVARD WATERLINE IMPROVEMENTS

User: Gerardo.Gonzalez
Path: K:\LVL_Water\Resources\069513000_LasVegasBlvd\CADD\LAB Phase E Water Plans\W45-W47.dwg
Kimley-Horn and Associates, Inc. shall be without liability to Kimley-Horn and Associates, Inc. Reuse of and improper reliance on this document without written authorization and adaptation by Kimley-Horn and Associates, Inc. shall be without liability to Kimley-Horn and Associates, Inc.

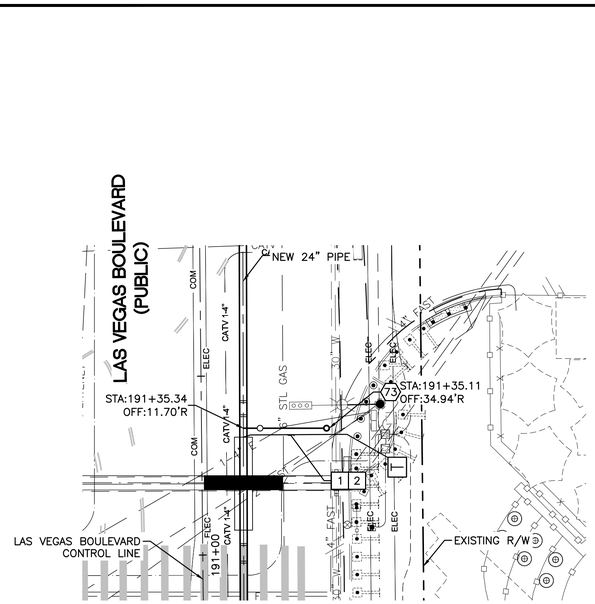

BLOW-OFF ASSEMBLY
STA: 191+35.34
SEE DWG NO. W-6

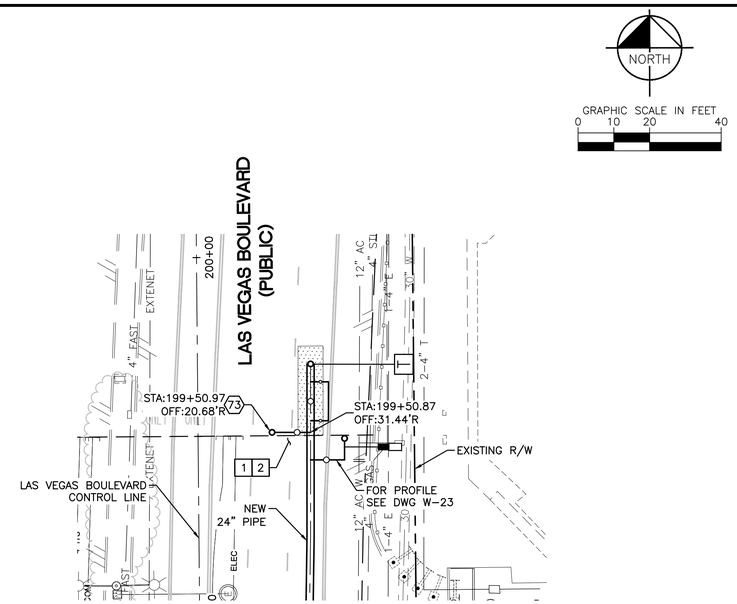

BLOW-OFF ASSEMBLY
STA: 199+50.97
SEE DWG NO. W-7

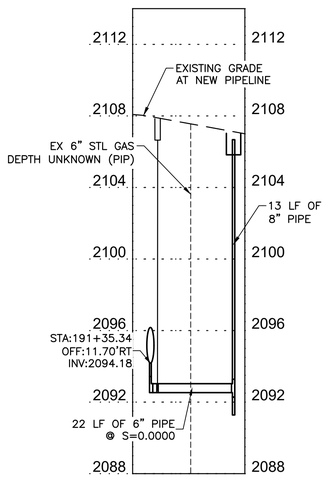

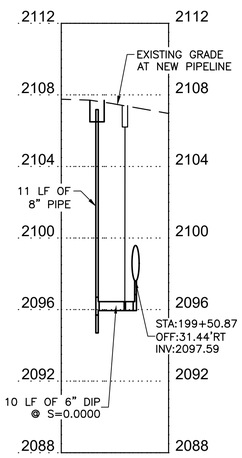

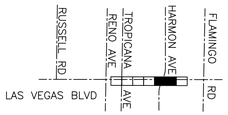

KEY MAP
NTS

CONSTRUCTION INDEX

73 INSTALL 6" BLOW-OFF ASSEMBLY PER UDACS PLATE 37 ON DWG WD-16

CONSTRUCTION NOTES

1. ALL TRENCH PER DETAILS ON DWG WD-1
2. SAWCUT AND/OR MATCH EXISTING GRADE. CONTRACTOR TO COORDINATE W/ CLARK COUNTY INSPECTOR FOR SAWCUT LOCATIONS

FIRE DEPARTMENT APPROVAL

BY: _____ DATE: _____

APPROVAL OF THESE PLANS SHALL NOT BE CONSTRUED TO BE A PERMIT FOR, OR AN APPROVAL OF ANY VIOLATION OF ANY OF THE PROVISIONS OF STATE OR COUNTY LAWS.

APPROVAL OF THE FIRE DEPARTMENT HAVING JURISDICTION IS REQUIRED PRIOR TO OBTAINING FINAL APPROVAL FROM THE LAS VEGAS VALLEY WATER DISTRICT.

CCWRD APPROVAL

CLARK COUNTY WATER RECLAMATION DISTRICT DATE

CCWRD PIPES NUMBER IS 21,955.
SIGNATURE ON THESE PLANS SHALL NOT BE CONSTRUED TO BE A PERMIT FOR OR THE APPROVAL OF ANY VIOLATION OF CLARK COUNTY WATER RECLAMATION DISTRICT RULES, REGULATIONS, OR DESIGN AND CONSTRUCTION STANDARDS.

LVVWD APPROVAL

APPROVED FOR CONSTRUCTION

LAS VEGAS VALLEY WATER DISTRICT PLANNING AND ENGINEERING SERVICES

PROJECT No. 139055 FIRST APPROVED DATE _____

811 know what's below Call before you dig

SAFETY ALERT Call Before You Overhead 1-702-227-2929

UNION PACIFIC RAILROAD Call Before You Dig 1-800-336-9193

Call before you UnderGround 1-702-432-5300

NO.	REVISIONS	DATE
		APPROVED

CLARK COUNTY NEVADA

LAS VEGAS BLVD WATERLINE REPLACEMENT - TROPICANA AVE TO FLAMINGO RD (PHASE E/F)

24" WATER MAIN - BLOW-OFF ASSEMBLY PLAN AND PROFILE STA 191+35 & STA 199+50

CLARK COUNTY, NEVADA, DEPARTMENT OF PUBLIC WORKS

PROFESSIONAL ENGINEER - STATE OF NEVADA
RAY P. MONTOYA
Exp. 12/31/2021
CIVIL
No.025877
10/08/2021

PROJECT No: 500-897-LV-EF
DESIGNED BY: ROM/GAG
APPROVED BY
DRAWN BY: GAG/KAS/KMT
CHECKED BY: ALF/RPM/ROM

Kimley»Horn
6671 Las Vegas Boulevard South Suite 320
Las Vegas, Nevada 89119
Tel. No.(702) 862-3600

SCALE
HORIZ: 1" = 20'
VERT: 1" = 4'
FIELD BOOK

DRAWING NO.
W-47
SHT. 52 OF 80
L-2304

LAS VEGAS BOULEVARD WATERLINE IMPROVEMENTS

User: KarlLimin
Path: K:\TUC_Water\Resources\069513000_LasVegasBlvd\CADD\LAB Phase E Water Plans\W45-W47.dwg
Kimley-Horn and Associates, Inc. shall not be responsible for any modifications made to this document without written authorization and adaptation by Kimley-Horn and Associates, Inc. shall be without liability to Kimley-Horn and Associates, Inc. Reuse of and improper reliance on this document without written authorization and adaptation by Kimley-Horn and Associates, Inc. shall be without liability to Kimley-Horn and Associates, Inc. Document is intended only for the specific purpose and client for which it was prepared.

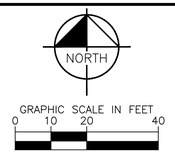

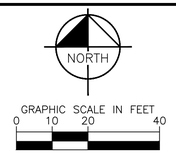

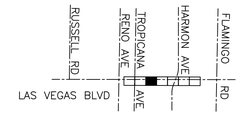

KEY MAP
NTS

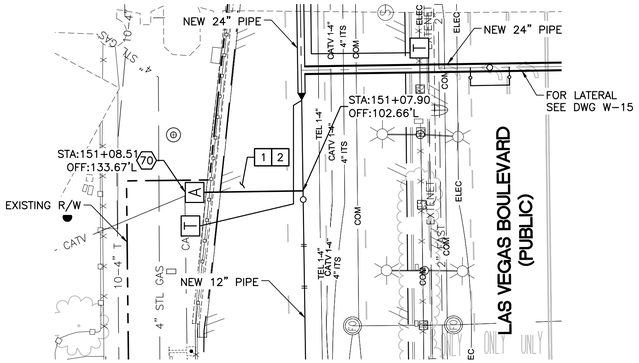

AIR RELEASE ASSEMBLY
STA: 151+07.90
SEE DWG NO. W-8

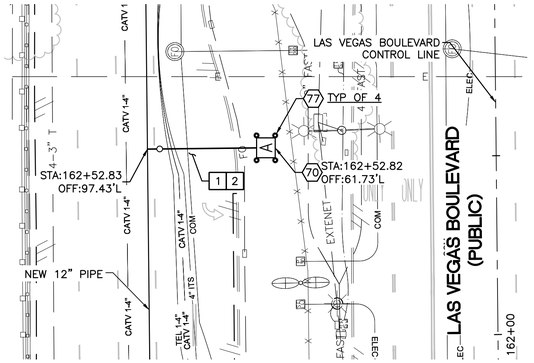

AIR RELEASE ASSEMBLY
STA: 162+52.83
SEE DWG NO. W-8

CONSTRUCTION INDEX

70 INSTALL AIR RELEASE VALVE ASSEMBLY PER DETAIL 1 ON DWG WD-9

77 INSTALL PROTECTIVE BOLLARD PER UDACS PLATE NO. 75 ON DWG WD-18

CONSTRUCTION NOTES

1 ALL TRENCH PER DETAILS ON DWG WD-1

2 SAWCUT AND/OR MATCH EXISTING GRADE. CONTRACTOR TO COORDINATE W/ CLARK COUNTY INSPECTOR FOR SAWCUT LOCATIONS

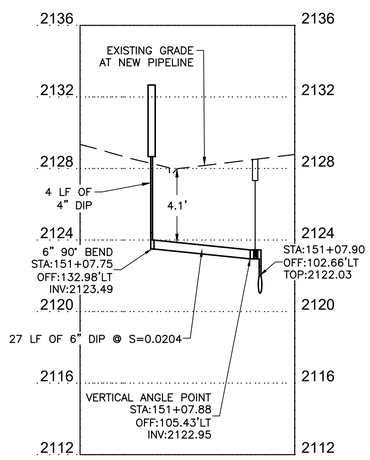

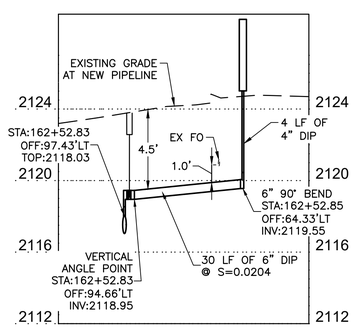

FIRE DEPARTMENT APPROVAL

BY: _____ DATE: _____

APPROVAL OF THESE PLANS SHALL NOT BE CONSTRUED TO BE A PERMIT FOR, OR AN APPROVAL OF ANY VIOLATION OF ANY OF THE PROVISIONS OF STATE OR COUNTY LAWS.

APPROVAL OF THE FIRE DEPARTMENT HAVING JURISDICTION IS REQUIRED PRIOR TO OBTAINING FINAL APPROVAL FROM THE LAS VEGAS VALLEY WATER DISTRICT.

CCWRD APPROVAL

_____
CLARK COUNTY WATER RECLAMATION DISTRICT DATE

CCWRD PIPES NUMBER IS 21955.
SIGNATURE ON THESE PLANS SHALL NOT BE CONSTRUED TO BE A PERMIT FOR OR THE APPROVAL OF ANY VIOLATION OF CLARK COUNTY WATER RECLAMATION DISTRICT RULES, REGULATIONS, OR DESIGN AND CONSTRUCTION STANDARDS.

LVVWD APPROVAL

APPROVED FOR CONSTRUCTION

_____
LAS VEGAS VALLEY WATER DISTRICT PLANNING AND ENGINEERING SERVICES

PROJECT No. 139055 FIRST APPROVED DATE _____

811 know what's below Call before you dig

SAFETY ALERT Call Before You Overhead 1-702-227-2929

UNION PACIFIC RAILROAD Call Before You Dig 1-800-336-9193

Call before you UnderGround 1-702-432-5300

NO.	REVISIONS	DATE
		APPROVED

CLARK COUNTY NEVADA

LAS VEGAS BLVD WATERLINE REPLACEMENT - TROPICANA AVE TO FLAMINGO RD (PHASE E/F)

12" WATER MAIN - AIR VALVE ASSEMBLY PLAN AND PROFILE STA 151+07 & STA 162+52

CLARK COUNTY, NEVADA, DEPARTMENT OF PUBLIC WORKS

PROFESSIONAL ENGINEER - STATE OF NEVADA
RAY P. MONTOYA
Exp. 12/31/2021
CIVIL
No.025877
10/08/2021

PROJECT No: 500-897-LV-EF DRAWN BY: GAG/KAS/KMT
DESIGNED BY: ROM/GAG CHECKED BY: ALF/RPM/ROM
APPROVED BY _____

Kimley»Horn
6671 Las Vegas Boulevard South, Suite 320
Las Vegas, Nevada 89119 Tel. No.(702) 862-3600

SCALE
HORIZ: 1" = 20'
VERT: 1" = 4'
FIELD BOOK

DRAWING NO.
W-48
SHT. 53 OF 80
L-2304

LAS VEGAS BOULEVARD WATERLINE IMPROVEMENTS

User: KarliSmith
Path: K:\TUC_Water\Resources\096513000_Lasvegasblvd\CADD\LAB Phase E Water Plans\W48-W49.dwg
Kimley-Horn and Associates, Inc. shall be without liability to Kimley-Horn and Associates, Inc. Reuse of and improper reliance on this document without written authorization and adaptation by Kimley-Horn and Associates, Inc. shall be without liability to Kimley-Horn and Associates, Inc.

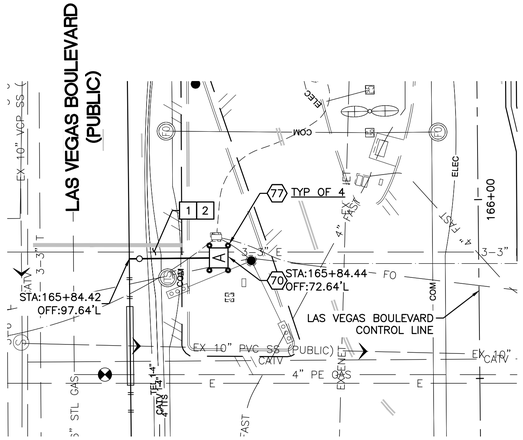

AIR RELEASE ASSEMBLY
STA: 165+84.42
SEE DWG NO. W-9

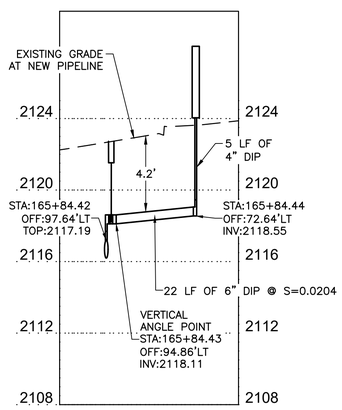

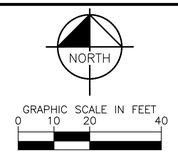

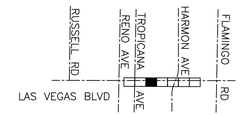

KEY MAP
NTS

CONSTRUCTION INDEX

70 INSTALL AIR RELEASE VALVE ASSEMBLY PER DETAIL 1 ON DWG WD-9

77 INSTALL PROTECTIVE BOLLARD PER UDACS PLATE NO. 75 ON DWG WD-18

CONSTRUCTION NOTES

1 ALL TRENCH PER DETAILS ON DWG WD-1

2 SAWCUT AND/OR MATCH EXISTING GRADE. CONTRACTOR TO COORDINATE W/ CLARK COUNTY INSPECTOR FOR SAWCUT LOCATIONS

FIRE DEPARTMENT APPROVAL

BY: _____ DATE: _____

APPROVAL OF THESE PLANS SHALL NOT BE CONSTRUED TO BE A PERMIT FOR, OR AN APPROVAL OF ANY VIOLATION OF ANY OF THE PROVISIONS OF STATE OR COUNTY LAWS.

APPROVAL OF THE FIRE DEPARTMENT HAVING JURISDICTION IS REQUIRED PRIOR TO OBTAINING FINAL APPROVAL FROM THE LAS VEGAS VALLEY WATER DISTRICT.

CCWRD APPROVAL

CLARK COUNTY WATER RECLAMATION DISTRICT DATE

CCWRD PIPES NUMBER IS 21,955.
SIGNATURE ON THESE PLANS SHALL NOT BE CONSTRUED TO BE A PERMIT FOR OR THE APPROVAL OF ANY VIOLATION OF CLARK COUNTY WATER RECLAMATION DISTRICT RULES, REGULATIONS, OR DESIGN AND CONSTRUCTION STANDARDS.

LVVWD APPROVAL

APPROVED FOR CONSTRUCTION

LAS VEGAS VALLEY WATER DISTRICT PLANNING AND ENGINEERING SERVICES

PROJECT No. 139055 FIRST APPROVED DATE _____

811 know what's below Call before you dig

SAFETY ALERT Call Before You Overhead 1-702-227-2929

UNION PACIFIC RAILROAD Call Before You Dig 1-800-336-9193

Call before you UnderGround 1-702-432-5300

NO.	REVISIONS	DATE
		APPROVED

CLARK COUNTY NEVADA

LAS VEGAS BLVD WATERLINE REPLACEMENT - TROPICANA AVE TO FLAMINGO RD (PHASE E/F)

12" WATER MAIN - AIR RELEASE ASSEMBLY PLAN AND PROFILE STA 165+84

CLARK COUNTY, NEVADA, DEPARTMENT OF PUBLIC WORKS

PROFESSIONAL ENGINEER - STATE OF NEVADA
RAY P. MONTOYA
Exp. 12/31/2021
CIVIL
No. 025877
10/08/2021

PROJECT No: 500-897-LV-EF
DESIGNED BY: ROM/GAG
APPROVED BY _____
DRAWN BY: GAG/KAS/KMT
CHECKED BY: ALF/RPM/ROM

Kimley»Horn
6671 Las Vegas Boulevard South, Suite 320
Las Vegas, Nevada 89119
Tel. No.(702) 862-3600

SCALE
HORIZ: 1" = 20'
VERT: 1" = 4'
FIELD BOOK

DRAWING NO.
W-49
SHT. 54 OF 80
L-2304

LAS VEGAS BOULEVARD WATERLINE IMPROVEMENTS

User: KarlLimin
Path: K:\TUC_Water\Resources\095313000_LasVegasBlvd\CADD\LAB Phase E Water Plans\W49-W49.dwg
Copyright © 2021 Kimley-Horn and Associates, Inc. Reuse of and improper reliance on this document without written authorization and adaptation by Kimley-Horn and Associates, Inc. shall be without liability to Kimley-Horn and Associates, Inc. Reuse of and improper reliance on this document is intended only for the specific purpose and client for which it was prepared. Kimley-Horn and Associates, Inc. does not warrant or approve any other use, or any modifications or alterations.

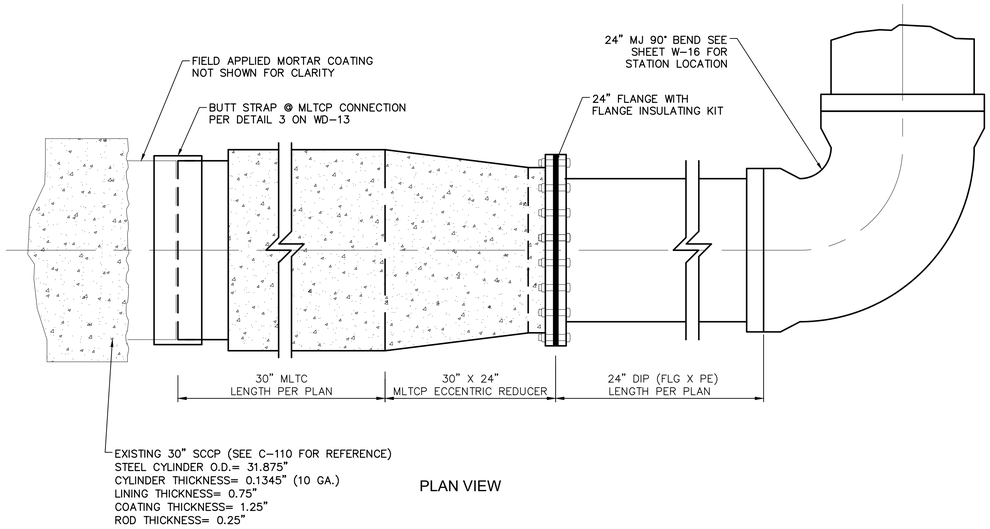

PLAN VIEW

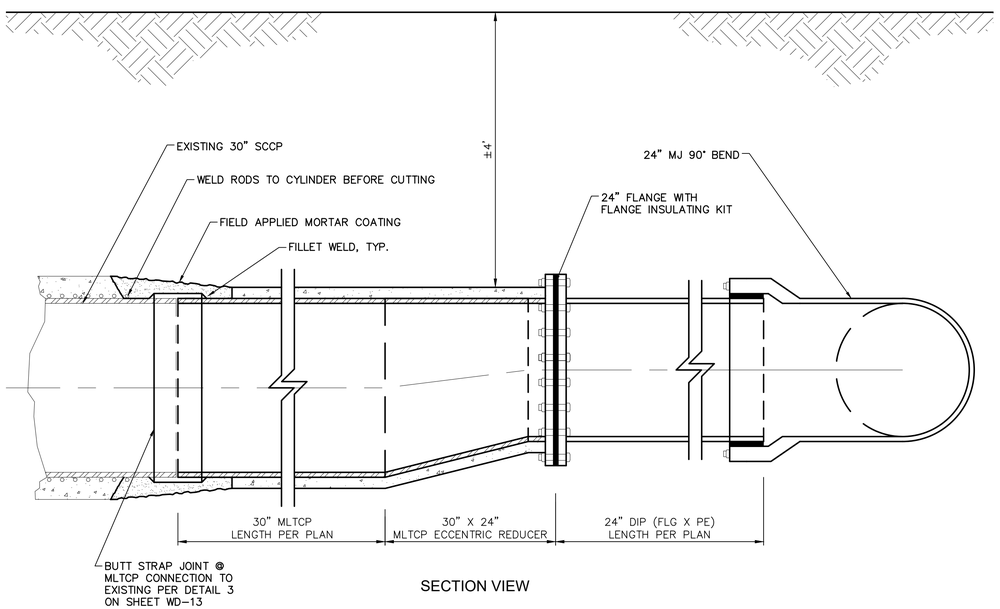

SECTION VIEW

WATER MAIN CONNECTION DETAIL (STA 153+38) 1 W-16

NOT TO SCALE (FOR EX. 30" SCCP @ TROPICANA AVE)

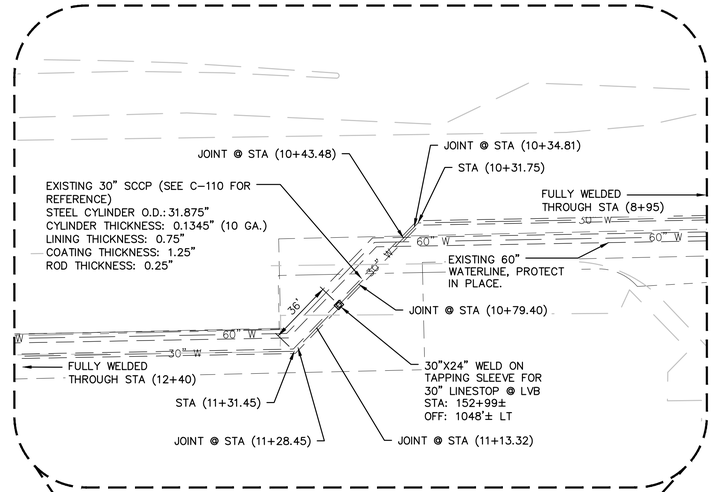

CONSTRUCTION NOTES

1. CONTRACTOR SHALL INSTALL 30"X24" LINESTOP FOR ISOLATION OF EXISTING 30" SCCP WATERLINE WEST OF LAS VEGAS BOULEVARD. CONTRACTOR TO USE LINESTOP FOR CONNECTION OF NEW WATERLINE TO EXISTING 30" SCCP AT INTERSECTION OF LAS VEGAS BOULEVARD AND TROPICANA AVE.
2. CONTRACTOR SHALL FIELD LOCATE EXISTING 30" SCCP WATERLINE AT PROPOSED LOCATION OF NEW LINESTOP. PROPOSED STATION AND OFFSET FOR NEW LINESTOP IS APPROXIMATE AND BASED ON AS-BUILT DRAWINGS OF THE EXISTING WATERLINE (C-110, CONSTRUCTED IN 1967). STATION AND OFFSET PROVIDED FOR PROPOSED LINESTOP CORRESPONDS TO THE LAS VEGAS BOULEVARD ROADWAY ALIGNMENT (THIS PROJECT).
3. ALL STATIONING SHOWN IN PARENTHESES IS FROM C-110 DRAWINGS, AND DOES NOT CORRESPOND TO THIS PROJECT'S ALIGNMENT. SUCH STATIONING LOCATIONS ARE PROVIDED FOR REFERENCE ONLY.
4. CONTRACTOR SHALL SCHEDULE AND COORDINATE SHUTDOWN OF EXISTING 30" SCCP WATERLINE ON TROPICANA AVENUE WITH LVVWD. LVVWD PERSONNEL MUST BE PRESENT FOR LINESTOP INSTALLATION AND SHUTDOWN.
5. CONTRACTOR TO PROVIDE SHOP DRAWINGS FOR PROPOSED LINESTOP TO LVVWD REPRESENTATIVES FOR REVIEW AND APPROVAL.

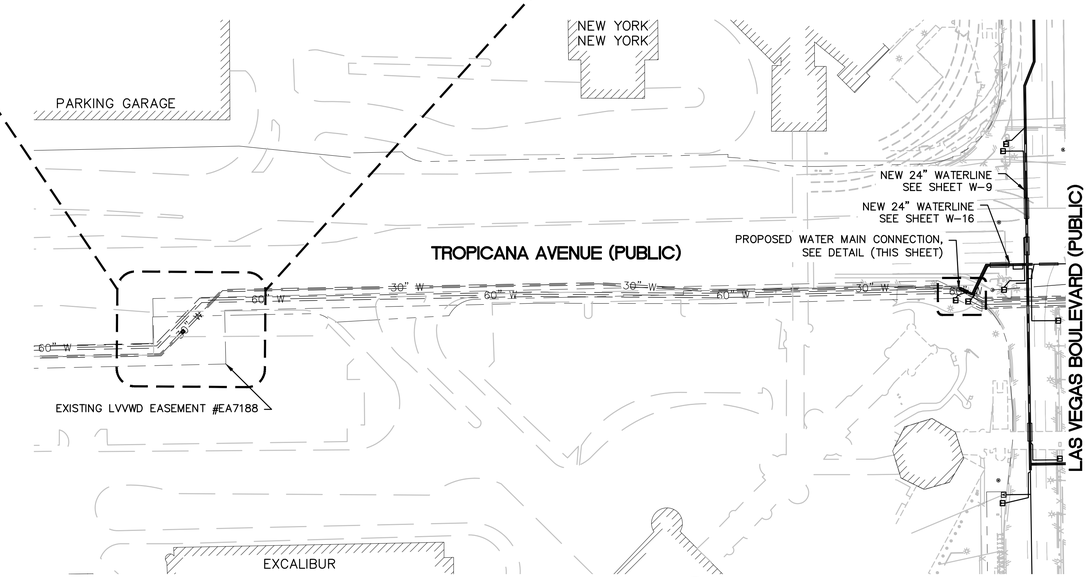

LINE STOP @ TROPICANA AVE (WEST OF LVB) 1 W-16

APPROX. STA: 152+99±, OFF: 1048'± LT

NORTH

GRAPHIC SCALE IN FEET
0 40 80 160

LVVWD APPROVAL

APPROVED FOR CONSTRUCTION

LAS VEGAS VALLEY WATER DISTRICT PLANNING AND ENGINEERING SERVICES

PROJECT No. 139055 FIRST APPROVED DATE

NO.	REVISIONS	DATE
		APPROVED

CLARK COUNTY NEVADA

LAS VEGAS BLVD WATERLINE REPLACEMENT - TROPICANA AVE TO FLAMINGO RD (PHASE E/F)

30" WATER MAIN CONNECTION AND LINE STOP - TROPICANA- STA 153+38 & STA 152+99

CLARK COUNTY, NEVADA, DEPARTMENT OF PUBLIC WORKS

PROFESSIONAL ENGINEER - STATE OF NEVADA
RAY P. MONTOYA
Exp. 12/31/2021
CIVIL
No. 025817
10/08/2021

PROJECT No: 500-897-LV-EF DRAWN BY: GAG/KAS/KMT
DESIGNED BY: ROM/GAG CHECKED BY: ALF/RPM/ROM
APPROVED BY

Kimley»Horn
6671 Las Vegas Boulevard South, Suite 320
Las Vegas, Nevada 89119
Tel. No.(702) 862-3600

SCALE
HORIZ: 1" = 80'
VERT: N/A
FIELD BOOK

DRAWING NO.
W-50
SHT. 55 OF 80
L-2304

LAS VEGAS BOULEVARD WATERLINE IMPROVEMENTS

User: Gerardo.Gonzalez
Path: K:\TUC_Waterresources\065813000_Lasvegasblvd\CADD\LVB Phase E Water Plans\W50-w801.dwg
These plans and specifications and electronic documents, as an instrument of service, is intended only for the specific purpose and client for which it was prepared. Reuse of and improper reliance on this document without written authorization and adaptation by Kimley-Horn and Associates, Inc. shall be without liability to Kimley-Horn and Associates, Inc.

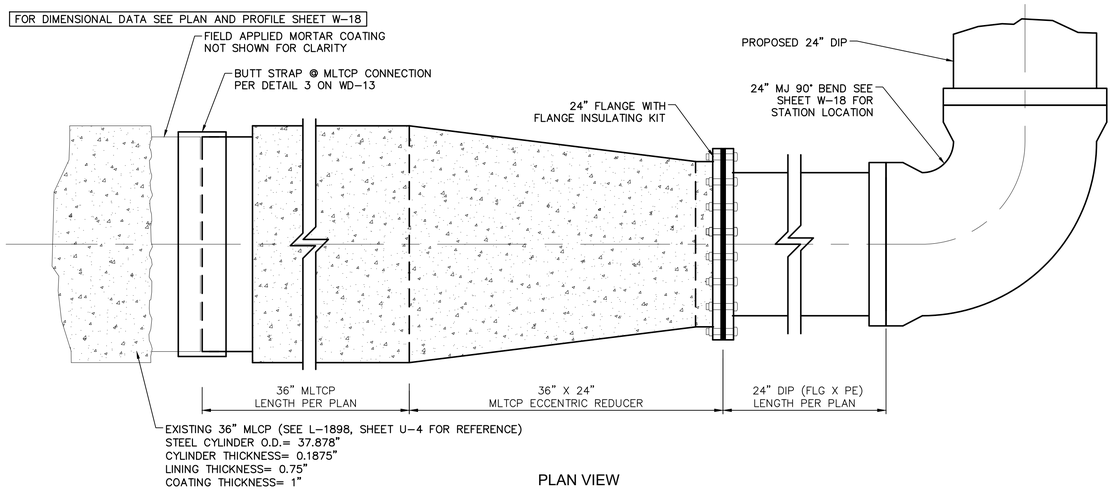

PLAN VIEW

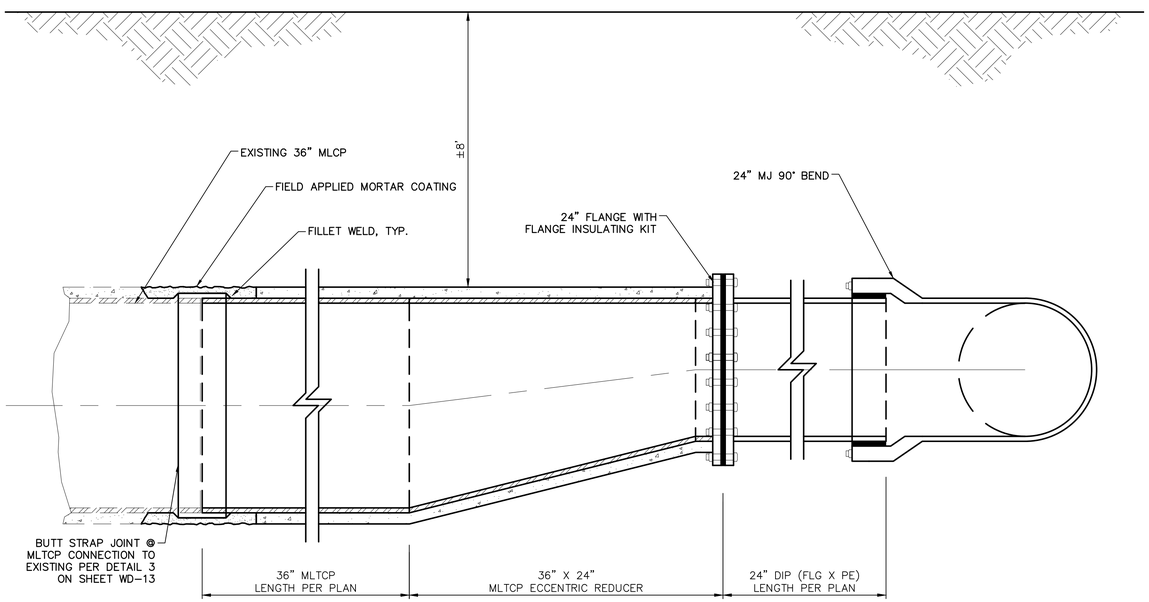

SECTION VIEW

WATER MAIN CONNECTION DETAIL (STA 181+58)

NOT TO SCALE (FOR EX. 36" MLCP @ HARMON AVE) 1 W-18

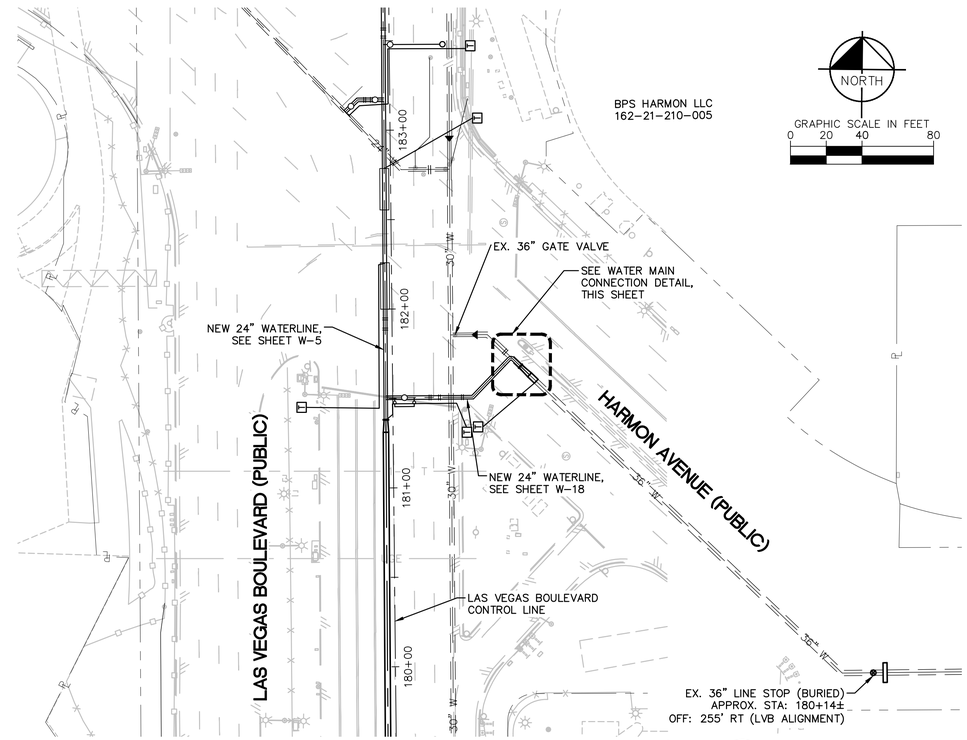

LINESTOP LOCATION DETAIL (HARMON AVE)

(FOR EX. 36" MLCP @ HARMON AVE) 1 W-18

CONSTRUCTION NOTES

1. CONTRACTOR SHALL INSTALL 36" LINE STOP ON EXISTING BURIED LINE STOP, ORIGINALLY INSTALLED AS A PART OF CLARK COUNTY PROJECT #L-1898.
2. ORIGINAL LINE STOP PERFORMED BY APS ON 8/25/2009
3. CONTRACTOR SHALL FIELD LOCATE EXISTING BURIED LINE STOP. STATION AND OFFSET PROVIDED IN DETAIL IS APPROXIMATE ONLY AND BASED ON AS-BUILT DRAWINGS. STATION AND OFFSET ARE BASED ON THE LAS VEGAS BOULEVARD ROADWAY ALIGNMENT (THIS PROJECT).
4. CONTRACTOR SHALL SCHEDULE SHUTDOWN OF EXISTING 36" MLCP WATERLINE ON HARMON AVE WITH LVVWD. LVVWD PERSONNEL MUST BE PRESENT FOR LINE STOP INSTALLATION.
5. CONTRACTOR TO PROVIDE SHOP DRAWINGS TO LVVWD REPRESENTATIVES FOR REVIEW AND APPROVAL.

LVVWD APPROVAL

APPROVED FOR CONSTRUCTION

LAS VEGAS VALLEY WATER DISTRICT PLANNING AND ENGINEERING SERVICES

PROJECT No. 139055 FIRST APPROVED DATE

NO.	REVISIONS	DATE
		APPROVED

CLARK COUNTY NEVADA

LAS VEGAS BLVD WATERLINE REPLACEMENT - TROPICANA AVE TO FLAMINGO RD (PHASE E/F)

36" WATER MAIN CONNECTION AND LINE STOP - HARMON - STA 181+58 & STA 180+14

CLARK COUNTY, NEVADA, DEPARTMENT OF PUBLIC WORKS

PROFESSIONAL ENGINEER - STATE OF NEVADA
RAY P. MONTOYA
Exp. 12/31/2021
CIVIL
No. 025877
10/08/2021

PROJECT No: 500-897-LV-EF DRAWN BY: GAG/KAS/KMT
DESIGNED BY: ROM/GAG CHECKED BY: ALF/RPM/ROM
APPROVED BY

Kimley»Horn
6671 Las Vegas Boulevard South, Suite 320
Las Vegas, Nevada 89119
Tel. No.(702) 862-3600

SCALE
HORIZ: 1" = 40'
VERT: N/A
FIELD BOOK

DRAWING NO.
W-51
SHT. 56 OF 80
L-2304

LAS VEGAS BOULEVARD WATERLINE IMPROVEMENTS

Reuse of and improper reliance on this document without written authorization and adaptation by Kimley-Horn and Associates, Inc. shall be without liability to Kimley-Horn and Associates, Inc.
The information contained herein, or in the hardcopy of which, is intended only for the specific purpose and client for which it was prepared.

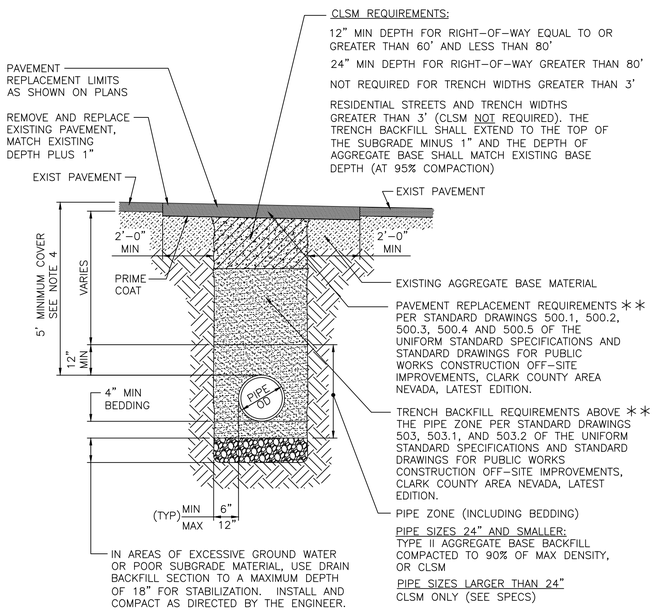

TRENCH BACKFILL - PAVED AREAS (1)

NOT TO SCALE

W1-W11, W14-W46

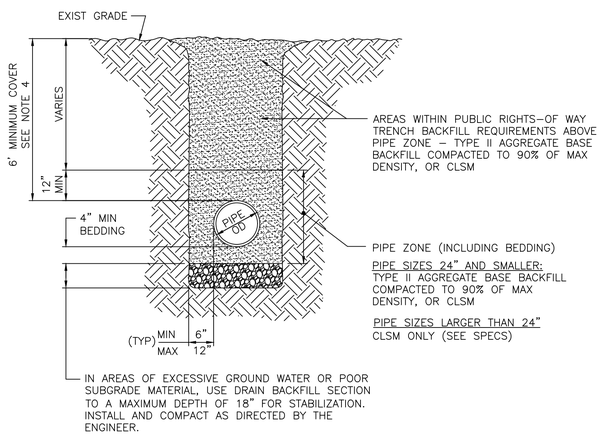

TRENCH BACKFILL - UNPAVED AREAS (2)

NOT TO SCALE

W1-W11, W14-W46

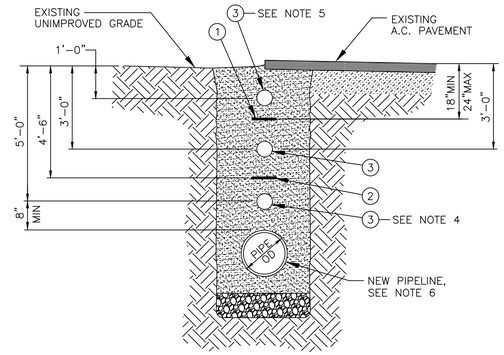

(1)	PIPE LOCATOR RIBBON - 3" WIDTH
(2)	PIPE LOCATOR RIBBON - 3" WIDTH (INSTALLED WHEN COVER OF NEW PIPELINE IS 7'-0" OR GREATER)
(3)	LOCATOR BALL - SEE NOTES

NOTES:

1. CENTER PIPE LOCATOR RIBBON IN TRENCH AND PLACE OVER ENTIRE LENGTH OF ALL TYPES, SIZES AND LOCATIONS OF WATER MAINS
2. LOCATOR BALLS REQUIRED AT ALL HORIZONTAL BENDS OR DEFLECTIONS, CASING ENDS, EVERY 400 FEET OF PIPELINE, OR WHERE REQUESTED BY ENGINEER.
3. IF A.C. PAVEMENT EXISTS INSTALL LOCATOR BALL AT 3'-0" (TYP).
4. IF A CUT TO FINISH GRADE IS ANTICIPATED INSTALL LOCATOR BALLS AT BOTH 3'-0" AND 5'-0" (TYP).
5. IF A FILL TO FINISH GRADE IS ANTICIPATED INSTALL LOCATOR BALLS AT BOTH 1'-0" AND 3'-0" (TYP).
6. RIBBON FOR RESTRAINED JOINTS/PIPE TO BE TAPED EVERY 20 FEET DIRECTLY TO TOP OF PIPE OR USE SELF-ADHERING RIBBON.

PIPE LOCATOR RIBBON AND LOCATOR BALL INSTALLATION (3)

NOT TO SCALE

W1-W11, W14-W46

NOTES FOR PAVED AND UNPAVED AREAS

1. REFERENCES:
   UNIFORM STANDARD SPECIFICATIONS FOR PUBLIC WORKS CONSTRUCTION OFF-SITE IMPROVEMENTS CLARK COUNTY AREA NEVADA, LATEST EDITION.

   INTERAGENCY QUALITY ASSURANCE COMMITTEE (IQAC)
2. SEE SPECS SEC 721 FOR ACCEPTABLE METHODS OF COMPACTION.
3. TRENCH EXCAVATION: COMPLY WITH THE CURRENT REGULATIONS AS DETERMINED BY NEVADA OCCUPATIONAL SAFETY AND HEALTH ADMINISTRATION.
4. DURING CONSTRUCTION 24" MINIMUM COVER MUST BE MAINTAINED FROM TOP OF PIPE TO GRADE.
5. MINIMUM COVER IS REFERENCED TO FUTURE FINISHED FINAL GRADES UNLESS OTHERWISE SHOWN ON PROFILE DRAWINGS.
6. SUPPORT PIPE AND FIBER OPTIC CONDUITS (IF REQUIRED) WITH SANDBAGS AND SPOT LOAD AS REQUIRED DURING INSTALLATION OF CLSM IN PIPE ZONE AND PIPE BEDDING AREAS.
7. DIAGONAL PAVEMENT REPLACEMENT IS NOT PERMITTED.
8. FOG SEAL (SEAL COAT) ALL DENSE GRADE PAVEMENT REPLACEMENT SECTIONS.

LVVWD APPROVAL

APPROVED FOR CONSTRUCTION

LAS VEGAS VALLEY WATER DISTRICT PLANNING AND ENGINEERING SERVICES

PROJECT No. 139055 FIRST APPROVED DATE

NO.	REVISIONS	DATE
		APPROVED

CLARK COUNTY NEVADA

LAS VEGAS BLVD WATERLINE REPLACEMENT - TROPICANA AVE TO FLAMINGO RD (PHASE E/F)

CIVIL DETAILS - MAIN

CLARK COUNTY, NEVADA, DEPARTMENT OF PUBLIC WORKS

PROFESSIONAL ENGINEER - STATE OF NEVADA
RAY P. MONTOYA
Exp. 12/31/2021
CIVIL
No.025877
10/08/2021

PROJECT No: 500-897-LV-EF
DESIGNED BY: ROM/GAG
APPROVED BY
DRAWN BY: GAG/KAS/KMT
CHECKED BY: ALF/RPM/ROM

Kimley»Horn
6671 Las Vegas Boulevard South, Suite 320
Las Vegas, Nevada 89119
Tel. No.(702) 862-3600

SCALE
HORIZ: N/A
VERT: N/A
FIELD BOOK

DRAWING NO.
WD-1
SHT. 57 OF 80
L-2304

LAS VEGAS BOULEVARD WATERLINE IMPROVEMENTS

Reuse of and improper reliance on this document without written authorization and adaptation by Kimley-Horn and Associates, Inc. shall be without liability to Kimley-Horn and Associates, Inc.
Deliverables provided herein, in pdf or comparable format, are intended only for the specific purpose and client for which it was prepared.
User: Lindsay.Blanton
Path: K:\Tra_Water\Resources\069317.0000_Las Vegas Blvd\CADD\LVB Phase E Water Plans\WD1.dwg

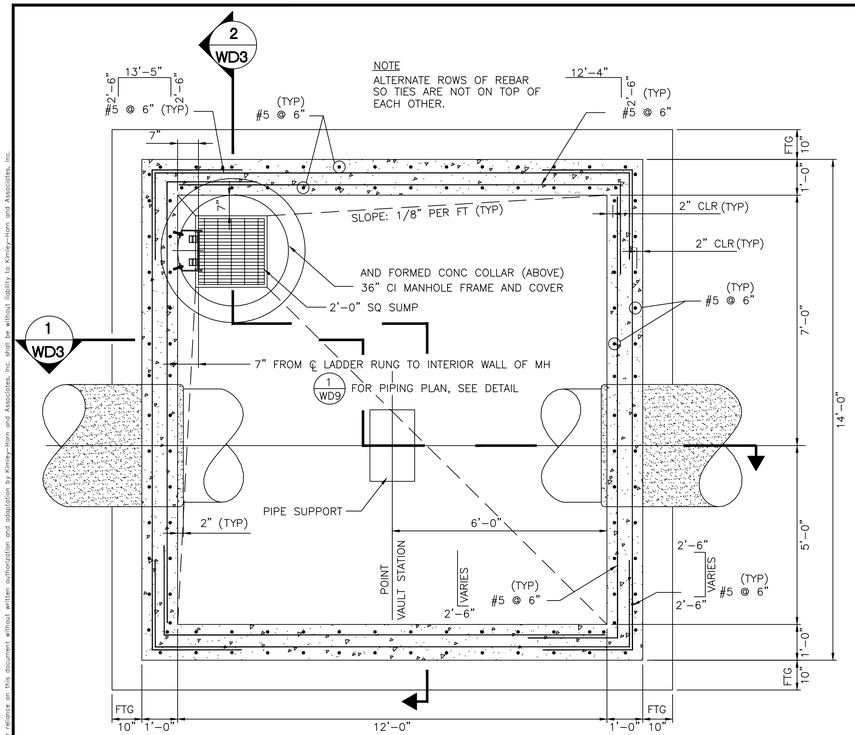

SECTIONAL PLAN

NOT TO SCALE

1 / W2

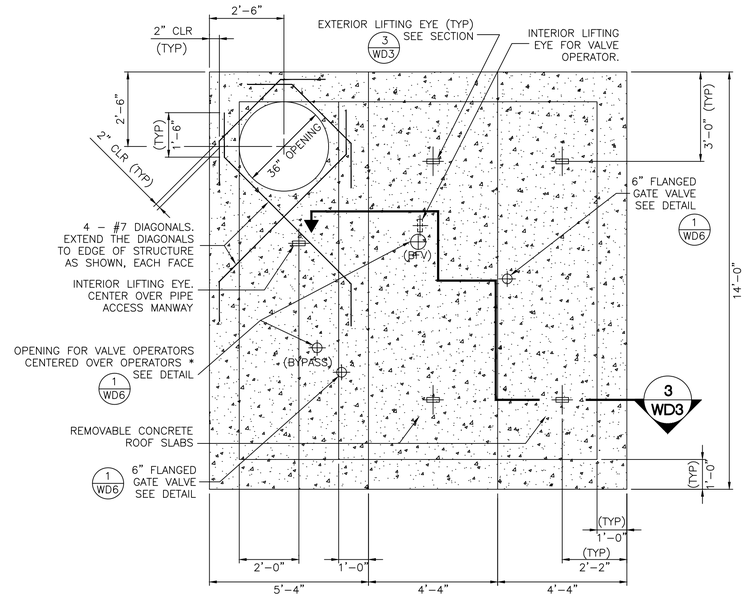

* NOTE:
ACTUAL LOCATION OF ROOF OPENING FOR VALVE BOX AND ACTUATOR EXTENSION SHALL BE DETERMINED BY CONTRACTOR, AS A FUNCTION OF THE DIMENSIONS AND CONFIGURATION OF THE ACTUAL EQUIPMENT USED ON THE PROJECT. CONTRACTOR SHALL SUBMIT SCALED SHOP DRAWING PRIOR TO POURING CONCRETE VAULT TOP SLAB.

ROOF PLAN

NOT TO SCALE

2 / W2

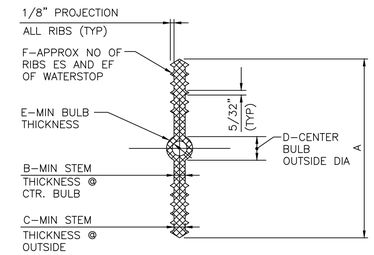

SIZE	A	B	C	D	E	F
6"x3/8"	6"	3/8"	3/8"	7/8"	1/4"	6

NOTES:

1. MATERIAL QUALITY PER SECTION 03 30 00 OF SPECIFICATIONS.
2. DIMENSION REQUIREMENTS INDICATED SHOULD BE GIVEN TO SUPPLIERS PRIOR TO PLACING ORDERS.
3. NON–ROUND CENTER BULBS SHALL HAVE A MIN OUTSIDE DIMENSION OF "D".

WATERSTOP DETAIL

NOT TO SCALE

3 / W2, WD3

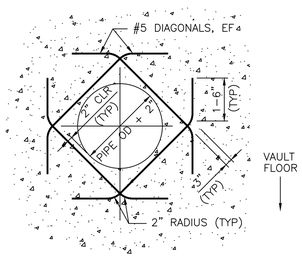

WALL OPENING - DIAGONAL REINFORCEMENT DETAIL

NOT TO SCALE

4 / W2, WD3

NOTES

1. CONCRETE FOR VAULT STRUCTURES SHALL BE 4000 PSI, UNLESS OTHERWISE SPECIFIED.
2. PIPE OUTLET SHALL BE SHAPED TO FIT THE SPECIFIED PIPE DIAMETER.
3. MAINTAIN A MIN CLEARANCE OF 2" OF COVER FOR REINFORCED STEEL, UNLESS OTHERWISE SPECIFIED.
4. BACKFILL ON TOP AND ALL SIDES OF VAULT STRUCTURE WITH TYPE II AGGREGATE BASE. PLACE AND COMPACT IN ACCORDANCE WITH THE STANDARD SPECIFICATIONS.
5. BACKFILL UNDER VAULT FLOOR SLAB WITH 12" OF TYPE II AGGREGATE BASE COMPACT TO 95% OF MAX DENSITY, UNLESS OTHERWISE SPECIFIED.

LVVWD APPROVAL

APPROVED FOR CONSTRUCTION

LAS VEGAS VALLEY WATER DISTRICT PLANNING AND ENGINEERING SERVICES

PROJECT No. 139055 FIRST APPROVED DATE

NO.	REVISIONS	DATE
		APPROVED

CLARK COUNTY NEVADA

LAS VEGAS BLVD WATERLINE REPLACEMENT - TROPICANA AVE TO FLAMINGO RD (PHASE E/F)

CIVIL DETAILS - MAIN

CLARK COUNTY, NEVADA, DEPARTMENT OF PUBLIC WORKS

PROFESSIONAL ENGINEER - STATE OF NEVADA
RAY P. MONTOYA
Exp. 12/31/2021
CIVIL
No. 025817
10/08/2021

PROJECT No: 500-897-LV-EF
DESIGNED BY: ROM/GAG
APPROVED BY
DRAWN BY: GAG/KAS/KMT
CHECKED BY: ALF/RPM/ROM

Kimley»Horn
6671 Las Vegas Boulevard South, Suite 320
Las Vegas, Nevada 89119
Tel. No.(702) 862-3600

SCALE
HORIZ: N/A
VERT: N/A
FIELD BOOK

DRAWING NO.
WD-2
SHT. 58 OF 80
L-2304

LAS VEGAS BOULEVARD WATERLINE IMPROVEMENTS

Reuse of and improper reliance on this document without written authorization and adaptation by Kimley-Horn and Associates, Inc. shall be without liability to Kimley-Horn and Associates, Inc.
The contents of this document are the property of Kimley-Horn and Associates, Inc. and shall only be used for the specific purpose and client for which it was prepared.
This document is intended only for the specific purpose and client for which it was prepared. Reuse of and improper reliance on this document without written authorization and adaptation by Kimley-Horn and Associates, Inc. shall be without liability to Kimley-Horn and Associates, Inc.

User: Karl.Timm
Path: K:\Tlc_Waterresources\069313000_lasvegasblvd\CADD\LB Phase E Water Plans\WD2.dwg

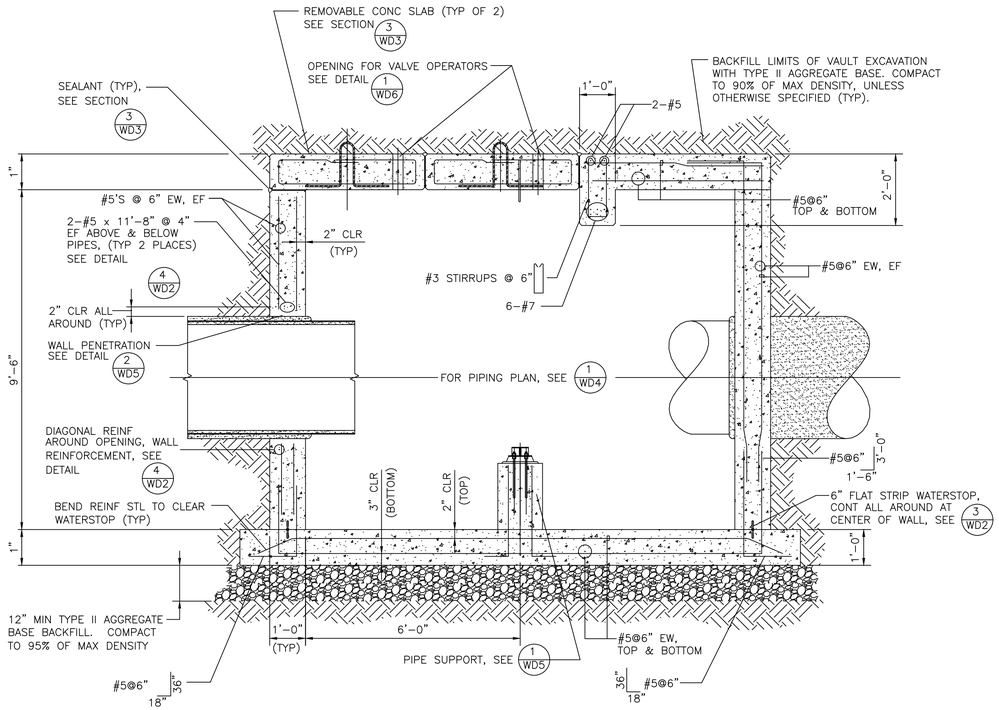

SECTION 1

SCALE 1/2" = 1'-0"

W2, WD2

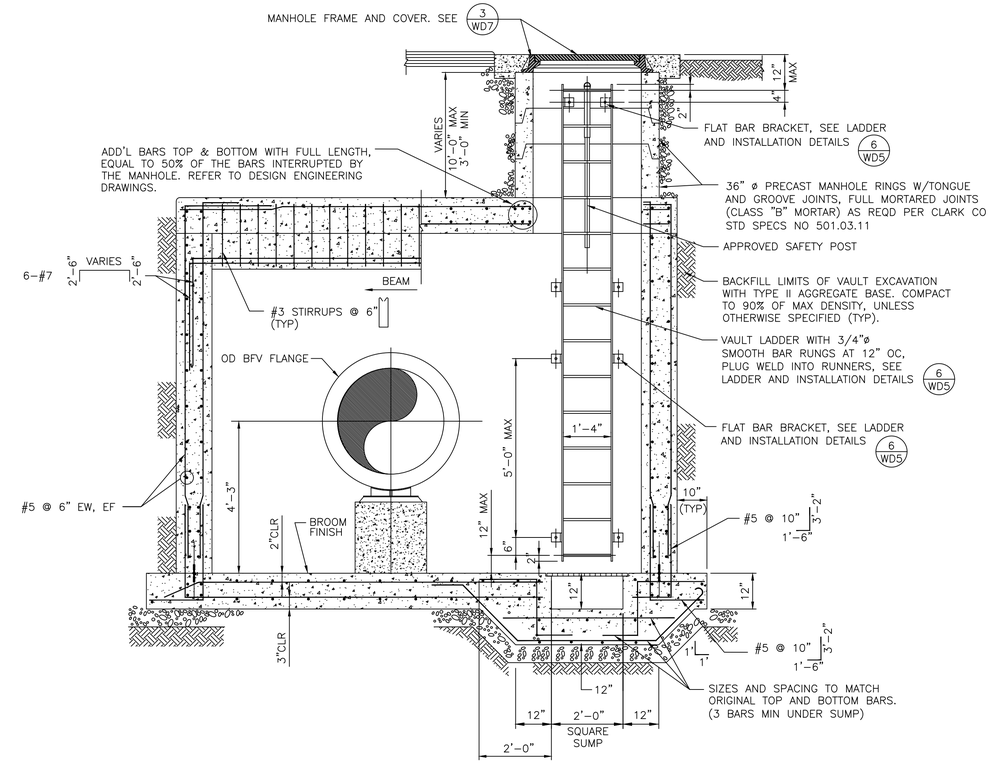

SECTION 2

SCALE: 1/2" = 1'-0"

W2, WD2

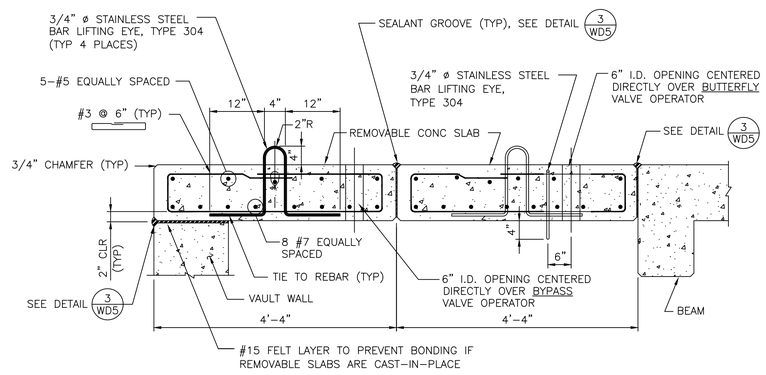

REMOVABLE CONCRETE SLAB SECTION 3

NOT TO SCALE

W2, WD2, WD3

LVVWD APPROVAL

APPROVED FOR CONSTRUCTION

LAS VEGAS VALLEY WATER DISTRICT PLANNING AND ENGINEERING SERVICES

PROJECT No. 139055 FIRST APPROVED DATE

NO.	REVISIONS	DATE
		APPROVED

CLARK COUNTY NEVADA

LAS VEGAS BLVD WATERLINE REPLACEMENT - TROPICANA AVE TO FLAMINGO RD (PHASE E/F)

CIVIL DETAILS - MAIN

CLARK COUNTY, NEVADA, DEPARTMENT OF PUBLIC WORKS

PROFESSIONAL ENGINEER - STATE OF NEVADA
RAY P. MONTOYA
Exp. 12/31/2021
CIVIL
No. 025877
10/08/2021

PROJECT No: 500-897-LV-EF
DESIGNED BY: ROM/GAG
APPROVED BY
DRAWN BY: GAG/KAS/KMT
CHECKED BY: ALF/RPM/ROM

Kimley»Horn
6671 Las Vegas Boulevard South, Suite 320
Las Vegas, Nevada 89119
Tel. No.(702) 862-3600

SCALE
HORIZ: N/A
VERT: N/A
FIELD BOOK

DRAWING NO.
WD-3
SHT. 59 OF 80
L-2304

LAS VEGAS BOULEVARD WATERLINE IMPROVEMENTS

Reuse of and improper reliance on this document without written authorization and adaptation by Kimley-Horn and Associates, Inc. shall be without liability to Kimley-Horn and Associates, Inc.
The specified purpose, and on the recipient's assumed risk, is intended only for the specific purpose and client for which it was prepared.
User: Kyati.Timin
Path: K:\Tlv_Water\Resources\069313000_Lasvegasblvd\CADD\LAVB Phase E Water Plans\WD3.dwg

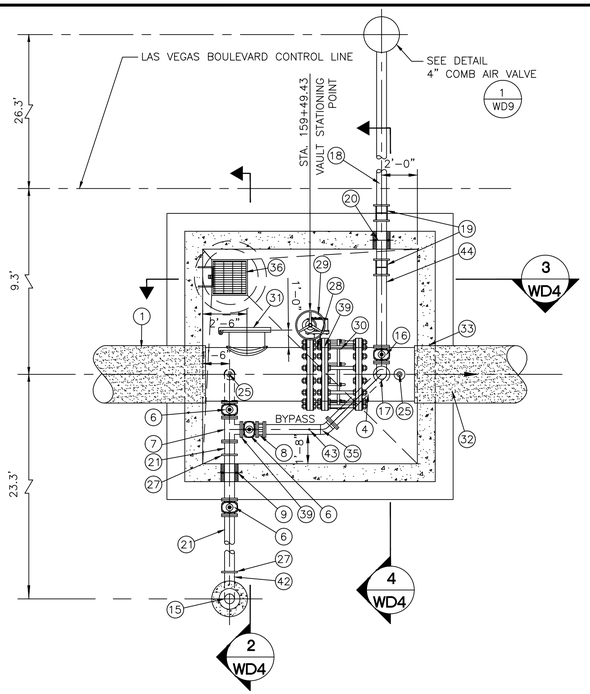

VAULT - STA: 159+49.43, OFF: 9.31'R PIPING PLAN - DISMANTLING JOINT (1)

SCALE: 1/4" = 1'-0"

W2, WD2, WD3

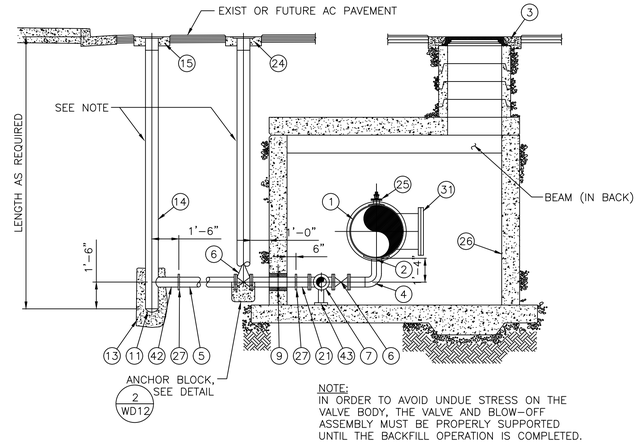

NOTE:
IN ORDER TO AVOID UNDUE STRESS ON THE VALVE BODY, THE VALVE AND BLOW-OFF ASSEMBLY MUST BE PROPERLY SUPPORTED UNTIL THE BACKFILL OPERATION IS COMPLETED.

SECTION (2)

SCALE: 1/4" = 1'-0"

W2, WD4

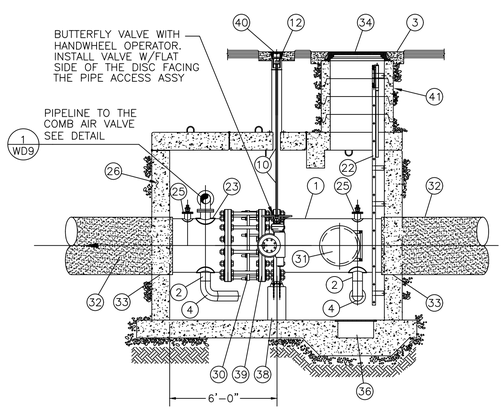

PIPING PROFILE SECTION - DISMANTLING JOINT (3)

SCALE: 1/4" = 1'-0"

W2, WD3, WD4

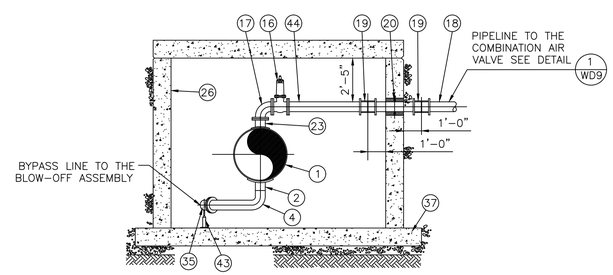

SECTION (4)

SCALE: 1/4" = 1'-0"

W2, WD4

COMPONENT DESCRIPTIONS – DISMANTLING JOINT

ITEM	DESCRIPTION
1	ML STL PIPE, SEE SPECS SEC 752
2	6" ML STL OUTLET AND COLLAR PLATE
3	10" THK FORMED CONCRETE COLLAR
4	6" – 90° ML STL ELBOW W/WELDED SHORT PIECE W/FLANGE
5	6" SCH 40 MLC STL PIPE FLANGED x GROOVED ENDS
6	6" FLANGED GATE VALVE NRS (2" SQUARE OPERATING NUT OUTSIDE VAULT OR HAND WHEEL INSIDE VAULT) SEE SPECS SEC 755. BYPASS VALVE INSIDE VAULT SHALL HAVE 1-1/4"ø VALVE OPERATOR STEM EXTENSION W/UNIVERSAL JOINT THROUGH ROOF TO STREET, SEE DETAIL 1 ON DWG WD6
7	6" ML STL FLANGED TEE
8	6" DISMANTLING JOINT – SEE SPECS SEC 766
9	6" SCH 40 FABR STL MLC WALL SPOOL – GROOVED x FLANGED ENDS W/WALL FLANGE.
10	1-1/4"ø VALVE OPERATOR STEM EXTENSION W/UNIVERSAL JOINT THROUGH ROOF TO STREET, SEE DETAIL 1 ON DWG WD6
11	8" SCH 30 MLC STL BUMPED HEAD
12	2" SQ OPERATING NUT
13	ENCASE BUMPED HEAD IN CONCRETE 4" MIN ALL AROUND
14	8" SCH 30 MLC STL PIPE
15	BLOW-OFF COVER ASSEMBLY, SEE DETAIL 2 ON DWG WD9
16	6" FLANGED GATE VALVE, SEE SPECS SEC 755
17	6" – 90° WELDED FLANGED ML STL ELBOW
18	6" DIP PC350 OR 6" PVC CL150 DR18 PIPE
19	6" SLEEVE TYPE COUPLING – SEE SPECS SEC 766
20	6" SCH 40 FABRICATED STL MLC WALL SPOOL – PLAIN ENDS W/WALL FLG
21	6" SCH 40 ML STL PIPE – FLANGED x GROOVED
22	GALVANIZED CARBON STEEL LADDER, SEE DETAIL 6 ON DWG WD5
23	6" FLANGED ML STL OUTLET
24	VALVE BOX AND CONCRETE COLLAR. SEE DETAIL 2 ON DWG WD10
25	CORP STOP, SEE DETAIL 5 ON DWG WD5
26	VAULT WALL
27	6" MECHANICAL COUPLING – SEE SPECS SEC 766
28	BUTTERFLY VALVE – SEE SPECS SEC 762
29	BUTTERFLY VALVE OPERATOR – SEE SPECS SEC 762
30	DISMANTLING JOINT – SEE SPECS SEC 766
31	24" ACCESS MANWAY, SEE VAULT ACCESS MANWAY DETAIL 2 ON DWG WD7
32	MLC STL PIPE, SEE SPECS SEC 752
33	WALL PENETRATION, SEE DETAIL 2 ON DWG WD5
34	36"ø C.I. MANHOLE FRAME, SEE SECTION 2 ON DWG WD3
35	6" SCH 40 ML STL PIPE – FLANGED x PLAIN END AND WELDED WITH FLANGED x PLAIN END 45° BEND. BYPASS LINE TO BLOW-OFF ASSEMBLY
36	2' SQ. SUMP, SEE SECTION 2 ON DWG WD3
37	CONCRETE FOOTING, SEE SECTION 2 ON DWG WD3
38	PIPE SUPPORT, SEE DETAIL 1 ON DWG WD5
39	INSULATING FLANGE, SEE DETAIL 4 ON DWG WD5
40	VALVE BOX ON VAULT, SEE DETAIL 1 ON DWG WD6
41	36"ø PRECAST MANHOLE RINGS, SEE SECTION 2 ON DWG WD3
42	6" SCH 40 MLC STL PIPE – GROOVED x PLAIN END WELDED TO 8" STL PIPE
43	ADJUSTABLE PIPE SUPPORT, SEE SPECS SEC 767
44	6" SCH 40 ML STL PIPE – FLANGED x PLAIN END

LVVWD APPROVAL

APPROVED FOR CONSTRUCTION

LAS VEGAS VALLEY WATER DISTRICT PLANNING AND ENGINEERING SERVICES

PROJECT No. 139055 FIRST APPROVED DATE

NO.	REVISIONS	DATE
		APPROVED

CLARK COUNTY NEVADA

LAS VEGAS BLVD WATERLINE REPLACEMENT - TROPICANA AVE TO FLAMINGO RD (PHASE E/F)

CIVIL DETAILS - MAIN

CLARK COUNTY, NEVADA, DEPARTMENT OF PUBLIC WORKS

PROFESSIONAL ENGINEER - STATE OF NEVADA
RAY P. MONTOYA
Exp. 12/31/2021
CIVIL
No. 025817
10/08/2021

PROJECT No: 500-897-LV-EF
DRAWN BY: GAG/KAS/KMT
DESIGNED BY: ROM/GAG
CHECKED BY: ALF/RPM/ROM
APPROVED BY

Kimley»Horn
6671 Las Vegas Boulevard South, Suite 320
Las Vegas, Nevada 89119
Tel. No.(702) 862-3600

SCALE
HORIZ: N/A
VERT: N/A
FIELD BOOK

DRAWING NO.
WD-4
SHT. 60 OF 80
L-2304

LAS VEGAS BOULEVARD WATERLINE IMPROVEMENTS

User: Kori.Timm
Path: K:\Tlc_Waterresources\093813000_lasvegasblvd\CADD\WD Phase E Water Plans\WD4.dwg
Copyright © 2021 Kimley-Horn and Associates, Inc. Reuse of and improper reliance on this document without written authorization and adaptation by Kimley-Horn and Associates, Inc. shall be without liability to Kimley-Horn and Associates, Inc. This document is intended only for the specific purpose and client for which it was prepared. Reuse of and improper reliance on this document without written authorization and adaptation by Kimley-Horn and Associates, Inc. shall be without liability to Kimley-Horn and Associates, Inc.

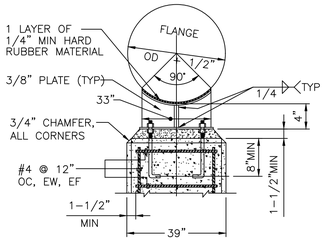

FRONT VIEW

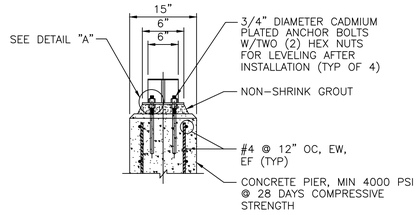

SIDE VIEW

NOTE: GALVANIZE ASSEMBLY AFTER WELDING FABRICATION.

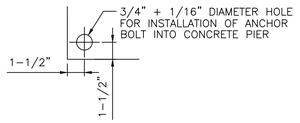

DETAIL "A"

PIPE SUPPORT DETAIL (1)

NOT TO SCALE

W2, WD3, WD4

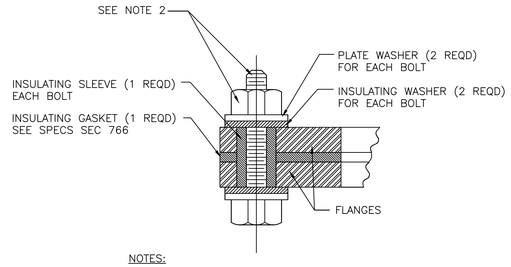

NOTES:

1. TORQUE BOLTS PER INSULATING FLANGE SET MANUFACTURERS RECOMMENDATIONS (TYP).
2. VAULT LOCATIONS: ASTM F593, SS TYPE 316 BOLT WITH ASTM A563 NUT, XYLAN 1000 SERIES COATING.

   BURIED OR EXPOSED LOCATIONS: ASTM A307 BOLT – UNC THREADS, WITH ASTM A563 NUT, ZINC COATED.

INSULATING FLANGE SET DETAIL (4)

NOT TO SCALE

W2, WD4, WD5

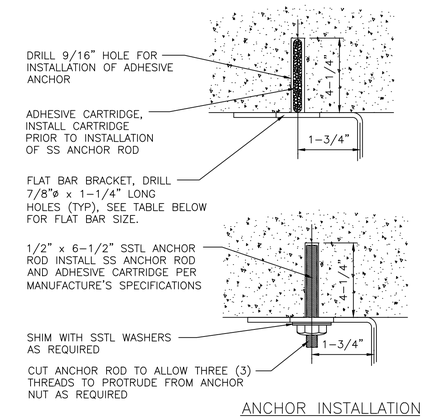

ANCHOR INSTALLATION

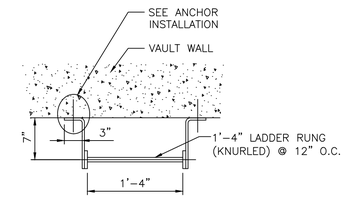

LADDER IN VAULT

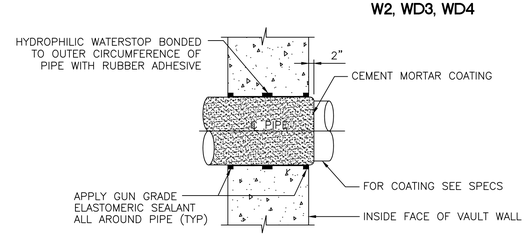

WALL PENETRATION DETAIL (2)

NOT TO SCALE

W2, WD3, WD4

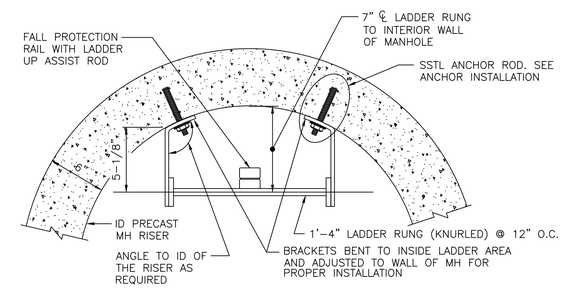

LADDER IN MANHOLE

FLAT BAR SIZE	
LADDER LENGTH	FLAT BAR SIZE
5'-0" TO 20'-0"	3" x 3/8"
OVER 20'-0"	4" x 1/2"

NOTES:

1. APPROVAL OF THE ENGINEER REQUIRED FOR ANY BRACKET SPACING OVER 5'-0" OC
2. LADDER SHALL BE MADE OF MILD CARBON STEEL WITH 3/4" DIA BAR RUNGS (KNURLED) PLUG WELDED TO RUNNERS.
3. GALVANIZE LADDER ASSEMBLY AFTER WELDING.

LADDER INSTALLATION DETAILS (6)

NOT TO SCALE

W2, WD3, WD8

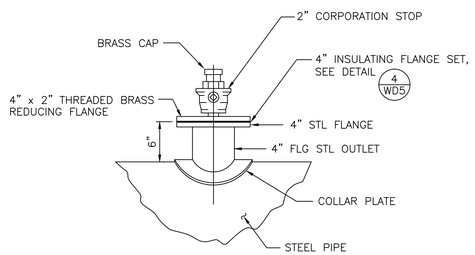

CORPORATION STOP DETAIL (5)

NOT TO SCALE

W2, WD4

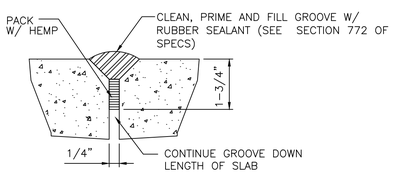

SEALANT GROOVE DETAIL (3)

NOT TO SCALE

W2, WD3

LVVWD APPROVAL

APPROVED FOR CONSTRUCTION

LAS VEGAS VALLEY WATER DISTRICT PLANNING AND ENGINEERING SERVICES

PROJECT No. 139055 FIRST APPROVED DATE

NO.	REVISIONS	DATE
		APPROVED

CLARK COUNTY NEVADA

LAS VEGAS BLVD WATERLINE REPLACEMENT - TROPICANA AVE TO FLAMINGO RD (PHASE E/F)

CIVIL DETAILS - MAIN

CLARK COUNTY, NEVADA, DEPARTMENT OF PUBLIC WORKS

PROFESSIONAL ENGINEER - STATE OF NEVADA
RAY P. MONTOYA
Exp. 12/31/2021
CIVIL
No. 025877
10/08/2021

PROJECT No: 500-897-LV-EF
DRAWN BY: GAG/KAS/KMT
DESIGNED BY: ROM/GAG
CHECKED BY: ALF/RPM/ROM
APPROVED BY

Kimley»Horn
6671 Las Vegas Boulevard South, Suite 320
Las Vegas, Nevada 89119
Tel. No.(702) 862-3600

SCALE
HORIZ: N/A
VERT: N/A
FIELD BOOK

DRAWING NO.
WD-5
SHT. 61 OF 80
L-2304

LAS VEGAS BOULEVARD WATERLINE IMPROVEMENTS

User: Lindsey.Bastian
Path: A:\TUC_Metrofiberoptics\069313000_LasVegasBlvd\CADD\LVB Phase E Water Plans\WD5-WD6.dwg
© Copyright Kimley-Horn and Associates, Inc. This document, and the information contained herein, is the property of Kimley-Horn and Associates, Inc. and is intended only for the specific purpose and client for which it was prepared. Reuse of and improper reliance on this document without written authorization and adaptation by Kimley-Horn and Associates, Inc. shall be without liability to Kimley-Horn and Associates, Inc.

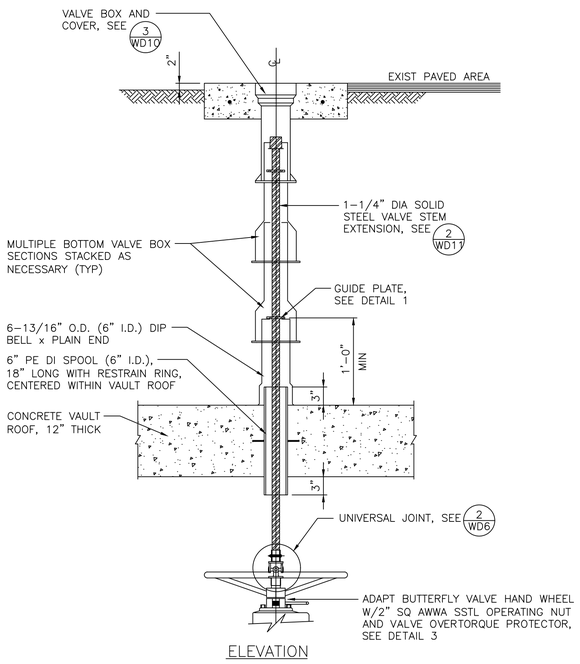

ELEVATION

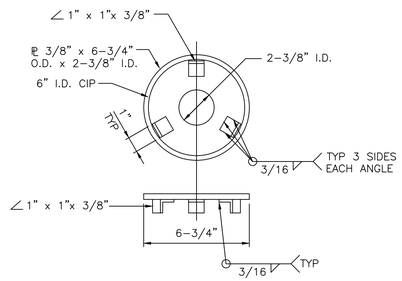

STEM GUIDE – DETAIL 2

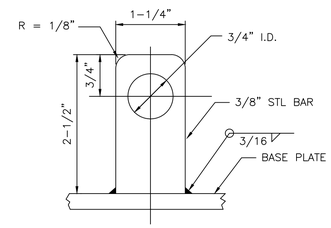

UNIVERSAL JOINT SIDES

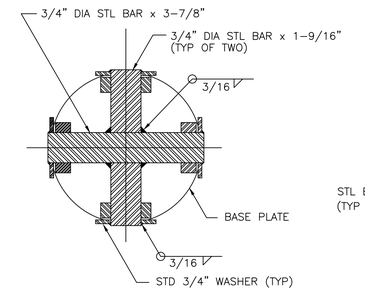

JOINT CROSS

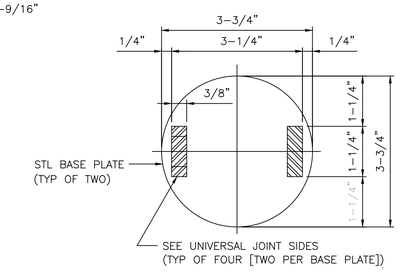

BASE PLATE

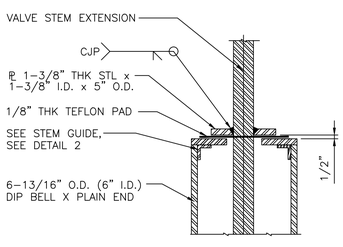

GUIDE PLATE – DETAIL 1

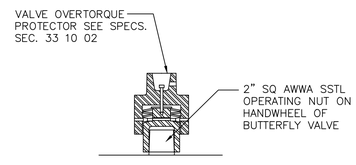

HANDWHEEL OPERATING NUT – DETAIL 3

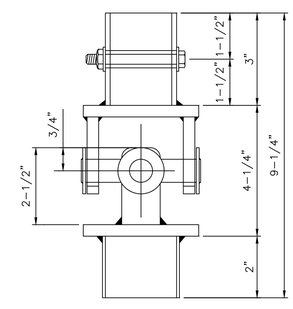

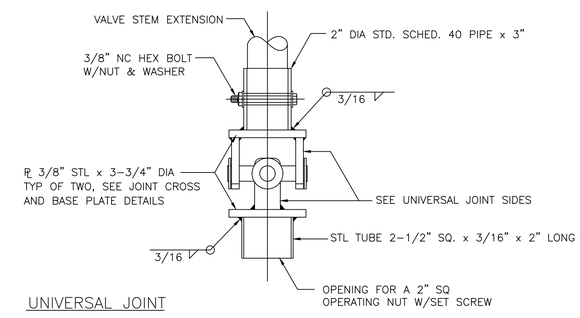

UNIVERSAL JOINT

NOTE
ASSEMBLY SHALL BE GALVANIZED AFTER WELDING.

VALVE BOX ON VAULT DETAIL (1)
NOT TO SCALE

W2, WD2, WD3

UNIVERSAL JOINT DETAIL (2)
NOT TO SCALE

W2, WD6

LVVWD APPROVAL

APPROVED FOR CONSTRUCTION

LAS VEGAS VALLEY WATER DISTRICT PLANNING AND ENGINEERING SERVICES

PROJECT No. 139055 FIRST APPROVED DATE

NO.	REVISIONS	DATE
		APPROVED

CLARK COUNTY NEVADA

LAS VEGAS BLVD WATERLINE REPLACEMENT - TROPICANA AVE TO FLAMINGO RD (PHASE E/F)

CIVIL DETAILS - MAIN

CLARK COUNTY, NEVADA, DEPARTMENT OF PUBLIC WORKS

PROFESSIONAL ENGINEER - STATE OF NEVADA
RAY P. MONTOYA
Exp. 12/31/2021
CIVIL
No. 025877
10/08/2021

PROJECT No: 500-897-LV-EF
DESIGNED BY: ROM/GAG
APPROVED BY
DRAWN BY: GAG/KAS/KMT
CHECKED BY: ALF/RPM/ROM

Kimley»Horn
6671 Las Vegas Boulevard South, Suite 320
Las Vegas, Nevada 89119
Tel. No.(702) 862-3600

SCALE
HORIZ: N/A
VERT: N/A
FIELD BOOK

DRAWING NO.
WD-6
SHT. 62 OF 80
L-2304

LAS VEGAS BOULEVARD WATERLINE IMPROVEMENTS

Reuse of and improper reliance on this document without written authorization and adaptation by Kimley-Horn and Associates, Inc. shall be without liability to Kimley-Horn and Associates, Inc.
This document, together with the concepts and designs presented herein, is intended only for the specific purpose and client for which it was prepared.
User: Lindsay.Bastian
Path: K:\TUC_Waterresources\056313000_LasVegasBlvd\CADD\LVB Phase E Water Plans\WD5-WD6.dwg
Plotted on Jul 29, 2021 at 2:42 PM by Bastian, Lindsay, Kimley-Horn and Associates, Inc.

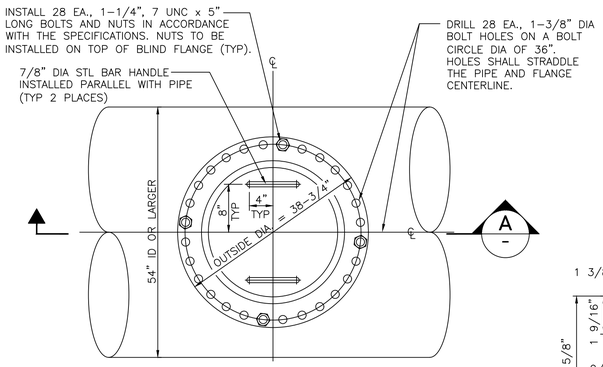

PLAN

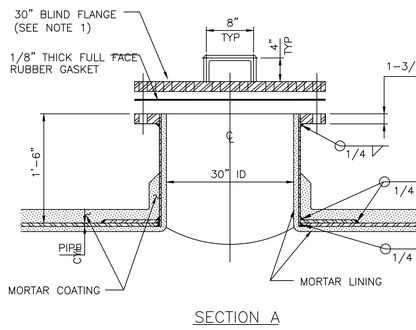

SECTION A

NOTES:

1. STANDARD BLIND FLANGE CLASS "D" (2.003" THICK) PER AWWA C207-94.
2. SEE SPECS SEC 752 FOR MORTAR LINED AND COATED STEEL PIPE

30-INCH PIPE ACCESS MANWAY (1)

NOT TO SCALE

WD8

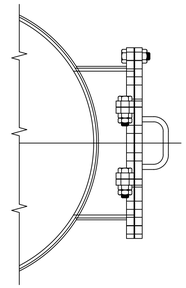

SECTION B

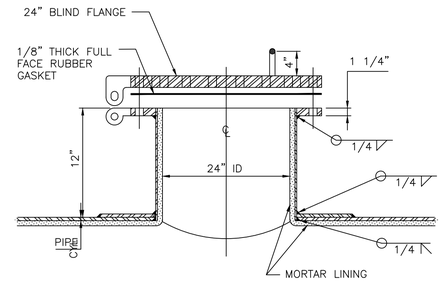

SECTION A

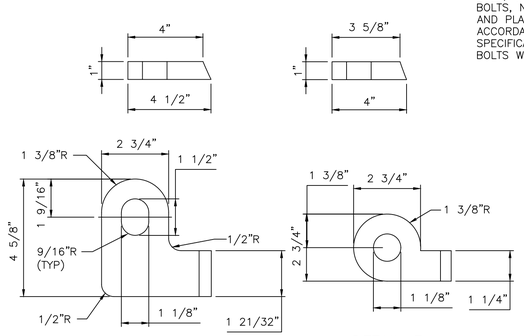

DETAIL 2 DETAIL 3

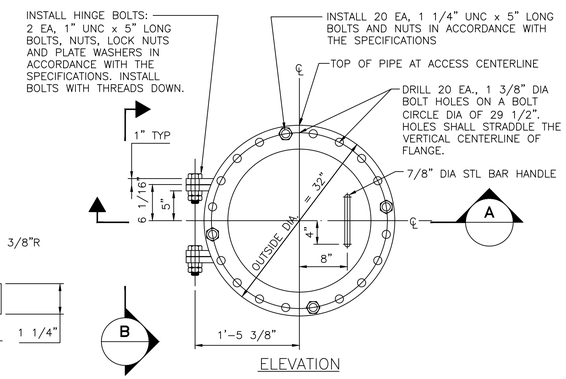

ELEVATION

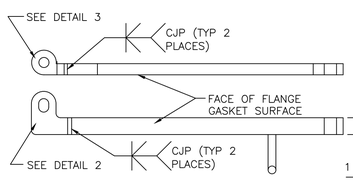

DETAIL 1

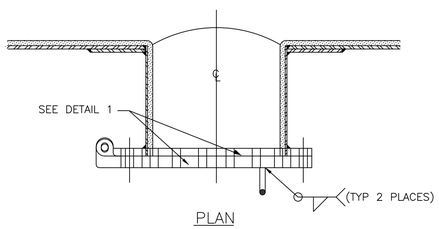

PLAN

NOTES:

1. STANDARD BLIND FLANGE PER AWWA C207-94.
2. SEE SPECS SEC 752 FOR MORTAR LINED AND COATED STEEL PIPE.

24-INCH VAULT ACCESS MANWAY (2)

NOT TO SCALE

WD4

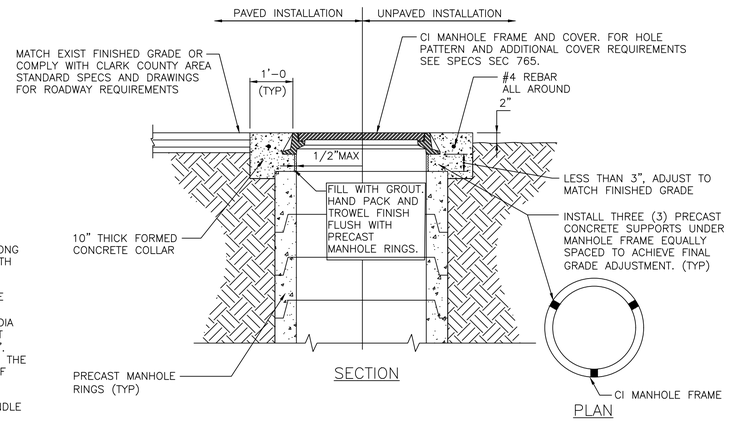

SECTION PLAN

MANHOLE COVER AND COLLAR INSTALLATION (3)

NOT TO SCALE

WD3, WD8, WD9

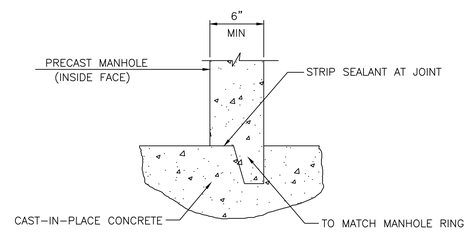

PRECAST TO CIP CONC BASE JT DETAIL (4)

NOT TO SCALE

WD8

LVVWD APPROVAL

APPROVED FOR CONSTRUCTION

LAS VEGAS VALLEY WATER DISTRICT PLANNING AND ENGINEERING SERVICES

PROJECT No. 139055 FIRST APPROVED DATE

NO.	REVISIONS	DATE
		APPROVED

CLARK COUNTY NEVADA

LAS VEGAS BLVD WATERLINE REPLACEMENT - TROPICANA AVE TO FLAMINGO RD (PHASE E/F)

CIVIL DETAILS - MAIN

CLARK COUNTY, NEVADA, DEPARTMENT OF PUBLIC WORKS

PROFESSIONAL ENGINEER - STATE OF NEVADA
RAY P. MONTOYA
Exp. 12/31/2021
CIVIL
No. 025877
10/08/2021

PROJECT No: 500-897-LV-EF
DESIGNED BY: ROM/GAG
APPROVED BY
DRAWN BY: GAG/KAS/KMT
CHECKED BY: ALF/RPM/ROM

Kimley»Horn
6671 Las Vegas Boulevard South, Suite 320
Las Vegas, Nevada 89119
Tel. No.(702) 862-3600

SCALE
HORIZ: N/A
VERT: N/A
FIELD BOOK

DRAWING NO.
WD-7
SHT. 63 OF 80
L-2304

LAS VEGAS BOULEVARD WATERLINE IMPROVEMENTS

User: Lindsey.Bratton
Path: K:\TIC_WaterResources\139853-35001_LasVegasBlvd\CADD\LVB Phase E Water Plans\WD7.dwg
This document, and the information contained herein, is provided for the specific purpose and client for which it was prepared. Reuse of and improper reliance on this document without written authorization and adaptation by Kimley-Horn and Associates, Inc. shall be without liability to Kimley-Horn and Associates, Inc.

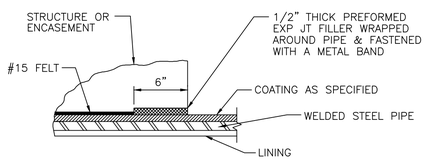

TYPICAL AT ENDS OF ACCESS MANHOLE STRUCTURES AND ENCASEMENTS (1)

NOT TO SCALE

WD8

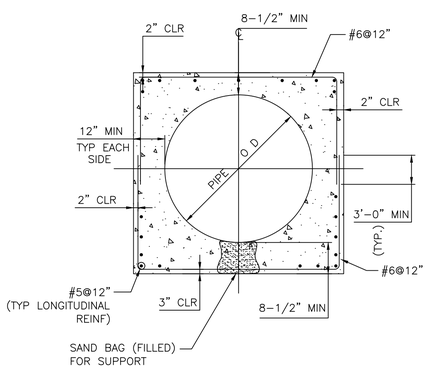

ACCESS MANHOLE ENCASEMENT (2)

NOT TO SCALE

WD8

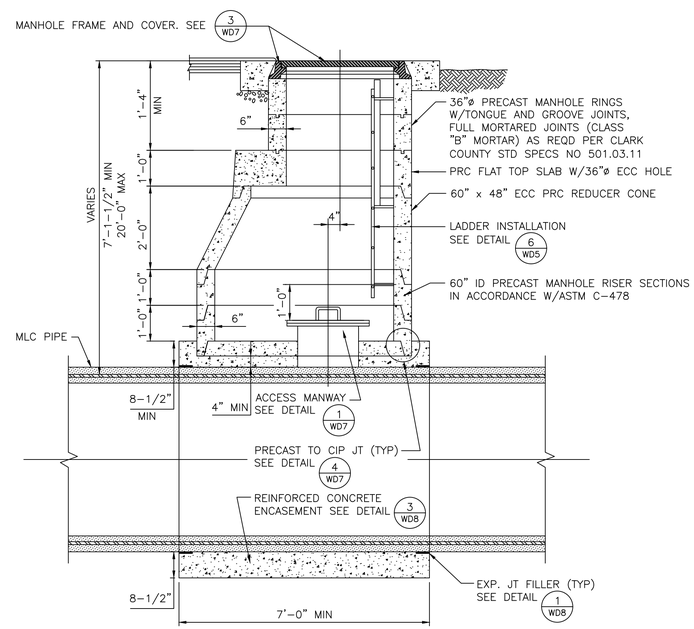

SECTION (3)

NOT TO SCALE

W1, W3, W6

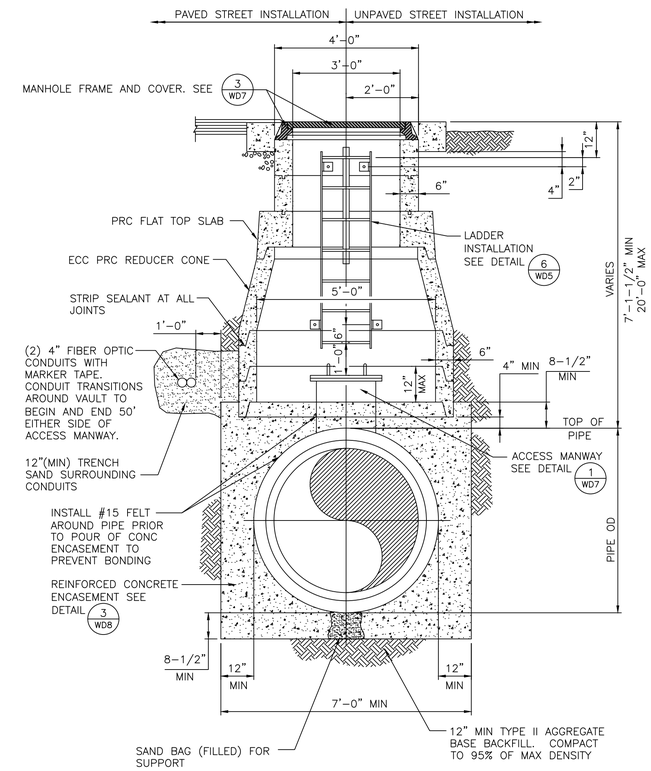

SECTION (4)

NOT TO SCALE

W1, W3, W6

LVVWD APPROVAL

APPROVED FOR CONSTRUCTION

LAS VEGAS VALLEY WATER DISTRICT PLANNING AND ENGINEERING SERVICES

PROJECT No. 139055 FIRST APPROVED DATE

NO.	REVISIONS	DATE
		APPROVED

CLARK COUNTY NEVADA

LAS VEGAS BLVD WATERLINE REPLACEMENT - TROPICANA AVE TO FLAMINGO RD (PHASE E/F)

CIVIL DETAILS - MAIN

CLARK COUNTY, NEVADA, DEPARTMENT OF PUBLIC WORKS

PROFESSIONAL ENGINEER - STATE OF NEVADA
RAY P. MONTOYA
Exp. 12/31/2021
CIVIL
No. 025817
10/08/2021

PROJECT No: 500-897-LV-EF
DESIGNED BY: ROM/GAG
APPROVED BY
DRAWN BY: GAG/KAS/KMT
CHECKED BY: ALF/RPM/ROM

Kimley»Horn
6671 Las Vegas Boulevard South, Suite 320
Las Vegas, Nevada 89119
Tel. No.(702) 862-3600

SCALE
HORIZ: N/A
VERT: N/A
FIELD BOOK

DRAWING NO.
WD-8
SHT. 64 OF 80
L-2304

LAS VEGAS BOULEVARD WATERLINE IMPROVEMENTS

User: LindseyBastian
Path: K:\TUC_Waterresources\065813000_lasvegasblvd\CADD\LVB Phase E Water Plans\WD8.dwg
Reuse of and improper reliance on this document without written authorization and adaptation by Kimley-Horn and Associates, Inc. shall be without liability to Kimley-Horn and Associates, Inc.
The contents of this document, including any electronic media, is intended only for the specific purpose and client for which it was prepared.

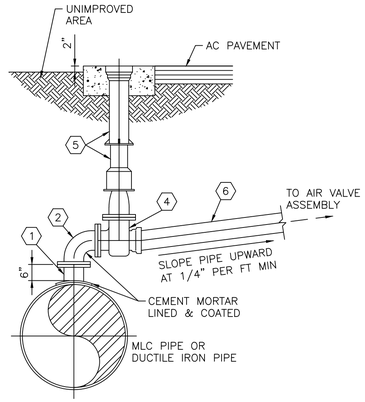

STANDARD INSTALLATION

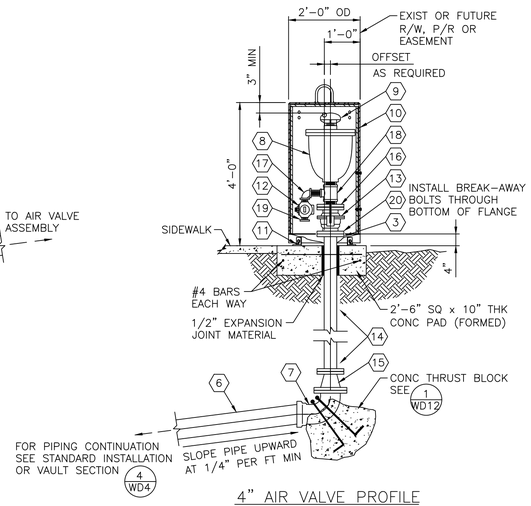

4" AIR VALVE PROFILE

LEGEND

1. 6" FLG STL OUTLET FOR MLC STLPIPE, FLG TEE FOR DIP
2. 6"– 90° FLG DUCTILE IRON BEND
3. 6" DUCTILE IRON FLANGE ADAPTOR
4. 6" FLG x PO OR FLG x MJ GATE VALVE W/2" OPERATING NUT
5. VALVE BOX AND COVER – SEE DETAIL 2 WD10
6. 6" DUCTILE IRON PC350 PIPE OR 6" PVC CL150 DR18 PIPE
7. 6" – 90° FLG x PO OR FLG x MJ DI BEND
8. 4" AIR VALVE, FLANGED INLET
9. 4" MUSHROOM VENT CAP WITH #22/24 STAINLESS STEEL MESH SCREEN
10. 2'–0" OD x 4'–0" HIGH STEEL COVER
11. 1/2"ø x 8" ANCHOR BOLT
12. 2" CORP STOP, THREADED BOTH ENDS
13. 4" BALL VALVE – QUARTER TURN
14. 4" OR 6" DUCTILE IRON PC350 PIPE
15. 6" x 4" FLG x FLG DI REDUCER
16. 4" x 2" THREADED REDUCING FLANGE
17. 2" 90° ELBOW, THREADED W/ THREADED NIPPLES
18. 4" X 2" BRASS TEE, THREADED INLETS W/ THREADED NIPPLES
19. THREADED CAP
20. 5/8"–11NC BREAK-AWAY ZINC PLATED HEX HD BOLT, HEX NUT AND LOCKWASHER

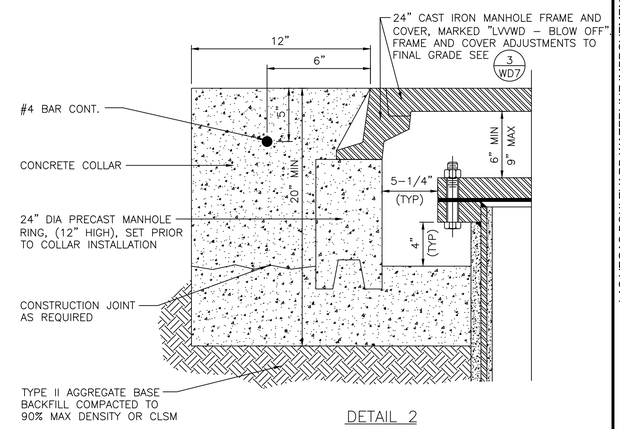

DETAIL 2

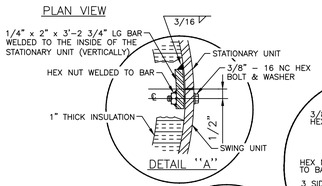

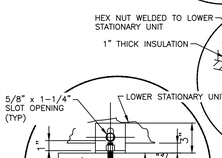

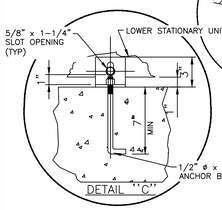

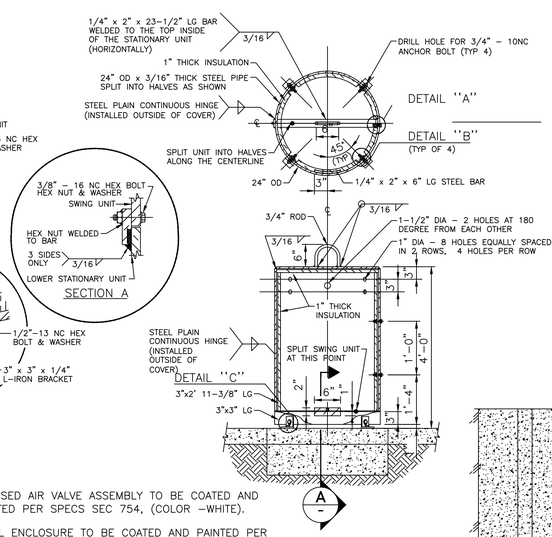

NOTES:

1. EXPOSED AIR VALVE ASSEMBLY TO BE COATED AND PAINTED PER SPECS SEC 754, (COLOR –WHITE).
2. STEEL ENCLOSURE TO BE COATED AND PAINTED PER SPECS SEC 754, (COLOR –BEIGE).
3. SEE SPECIFICATIONS FOR ALL APPROVED PRODUCTS.
4. ALL THREADED CONNECTIONS TO BE TEFLON TAPE WRAPPED (TYP).

AIR VALVE ASSEMBLY FOR 4" VALVES (STEEL ENCLOSURE) 1

NOT TO SCALE

W2, WD4

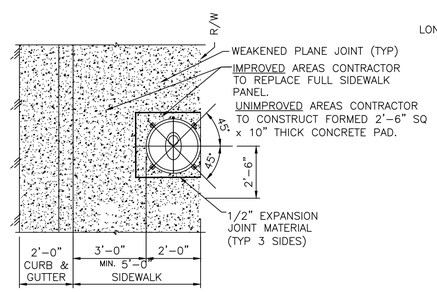

BLOW-OFF ASSEMBLY

NOTES:

1. IN ORDER TO AVOID UNDUE STRESS ON THE VALVE BOX, VALVE AND BLOW-OFF ASSEMBLY THEY MUST BE PROPERLY SUPPORTED UNTIL THE BACKFILL OPERATION IS COMPLETED.
2. ALL 6" AND 8" STEEL PIPES AND FITTINGS SHALL HAVE CEMENT MORTAR LINING AND COATING.
3. ALL EXPOSED FERROUS SURFACES TO BE COATED IN ACCORDANCE WITH SPECS SEC 754 AND 765.

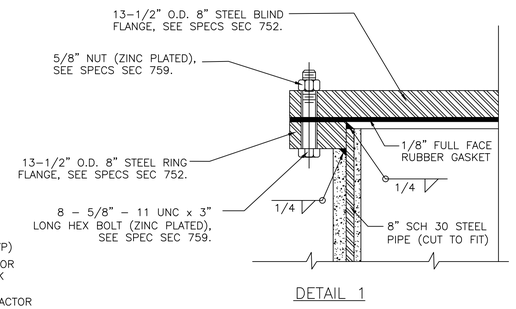

DETAIL 1

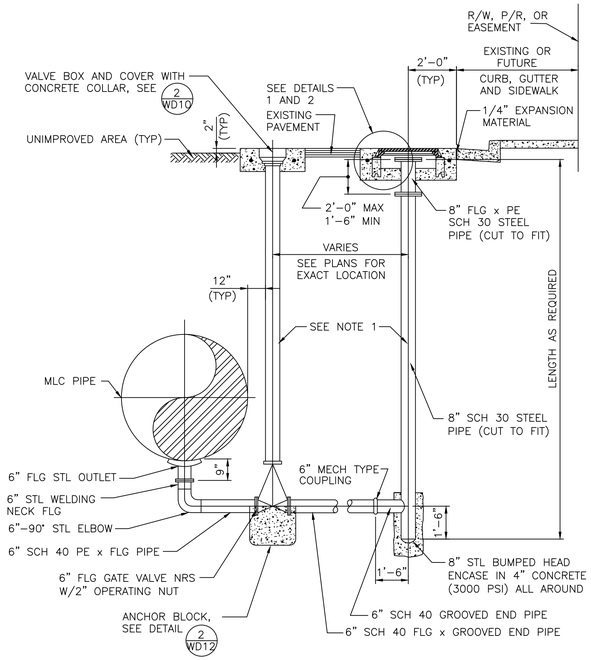

BLOW-OFF ASSEMBLY AND COVER DETAIL 2

NOT TO SCALE

W2, W3, W5, W6, W8

LVVWD APPROVAL

APPROVED FOR CONSTRUCTION

LAS VEGAS VALLEY WATER DISTRICT PLANNING AND ENGINEERING SERVICES

PROJECT No. 139055 FIRST APPROVED DATE

LAS VEGAS BOULEVARD WATERLINE IMPROVEMENTS

NO.	REVISIONS	DATE
		APPROVED

CLARK COUNTY NEVADA

LAS VEGAS BLVD WATERLINE REPLACEMENT - TROPICANA AVE TO FLAMINGO RD (PHASE E/F)

CIVIL DETAILS - MAIN

CLARK COUNTY, NEVADA, DEPARTMENT OF PUBLIC WORKS

PROFESSIONAL ENGINEER - STATE OF NEVADA
RAY P. MONTOYA
Exp. 12/31/2021
CIVIL
No.025877
10/08/2021

PROJECT No: 500-897-LV-EF
DESIGNED BY: ROM/GAG
APPROVED BY
DRAWN BY: GAG/KAS/KMT
CHECKED BY: ALF/RPM/ROM

Kimley»Horn
6671 Las Vegas Boulevard South, Suite 320
Las Vegas, Nevada 89119
Tel. No.(702) 862-3600

SCALE
HORIZ: N/A
VERT: N/A
FIELD BOOK

DRAWING NO.
WD-9
SHT. 65 OF 80
L-2304

User: Kori.Timin
Path: K:\TIC_WaterResources\093513000_Lasvegasblvd\CADD\LVB Phase E Water Plans\WD9_WD10.dwg
Any reproduction or reuse of this document without written authorization and adaptation by Kimley-Horn and Associates, Inc. shall be without liability to Kimley-Horn and Associates, Inc. Reuse of and improper reliance on this document is intended only for the specific purpose and client for which it was prepared. Reuse of and improper reliance on this document without written consent by Kimley-Horn and Associates, Inc. is prohibited.

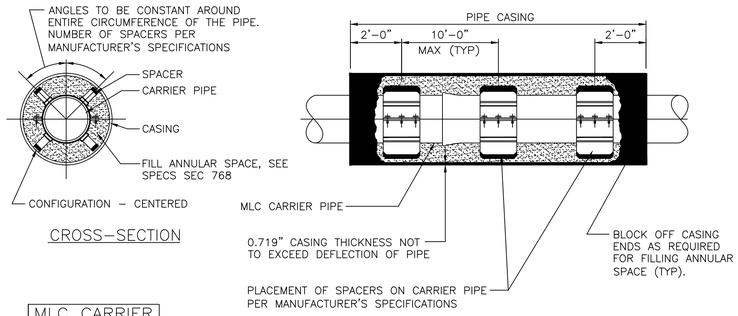

MLC CARRIER PIPE	
8" SPACER WIDTH	
PIPE SIZE	CASING ID
36"	54"

NOTES:

1. MLC PIPE JOINTS INSIDE PIPE CASING TO BE WELDED. PVC AND DI PIPE JOINTS INSIDE PIPE CASING TO BE RESTRAINED (TYP).
2. INTERIOR OF CASING TO BE GROUND SMOOTH AND LUBRICATED FOR SPACER INSTALLATION.
3. ALL FIBER OPTIC CONDUITS AND FITTINGS INSTALLED WITHIN CASING IN ACCORDANCE WITH SPECIFICATIONS.
4. ENTIRE PIPE CASING TO BE INSTALLED LEVEL (6"±) UNLESS OTHERWISE SHOWN ON DRAWINGS. SEE SPECS SEC 768 FOR FURTHER REQUIREMENTS.

CASING ASSEMBLY DETAIL (1)

NOT TO SCALE

W1, W2

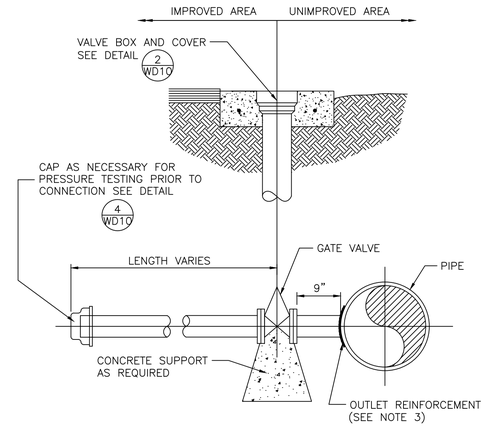

NOTES:

1. INSTALL VALVES CLOSED AND OPEN DURING TEST.
2. COAT AND WRAP OUTLET, VALVE AND PLUG. SEE SPECS SEC 760 AND 765.
3. OUTLET REINFORCEMENT SHALL BE DETERMINED PER AWWA M11 DESIGN METHOD.

VALVED OUTLET DETAIL (3)

NOT TO SCALE

W3, W7

NOTES

1. FINAL RIM ELEVATION TO BE 1/8" TO 1/4" BELOW FINAL STREET GRADE.
2. MORE STRINGENT INSTALLATION REQUIREMENTS MAY BE IMPOSED BY THE ENTITY HAVING THE JURISDICTION OVER THE VALVE BOX INSTALLATION LOCATION.
3. A VALVE STEM EXTENSION SHALL BE PROVIDED WHERE THE DEPTH TO THE OPERATING NUT EXCEEDS FIVE (5) FEET.
4. CONTRACTOR TO FORM CONCRETE COLLAR IN UNIMPROVED AREAS WITH SONOTUBE AND REMOVE PRIOR TO BACKFILL INSTALLATION (TYP).
5. SEE SPECIFICATIONS FOR ALL APPROVED PRODUCTS.

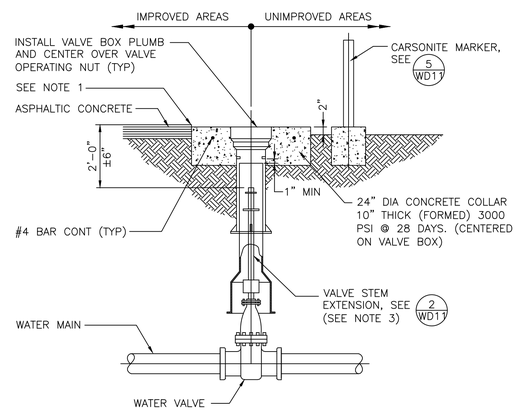

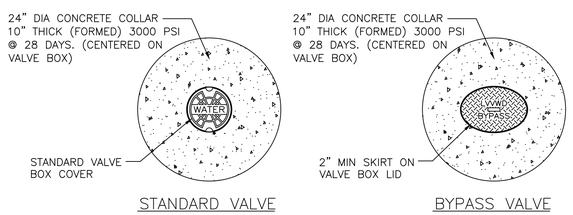

VALVE BOX INSTALLATION (2)

NOT TO SCALE

W1, W2, W3, WD4

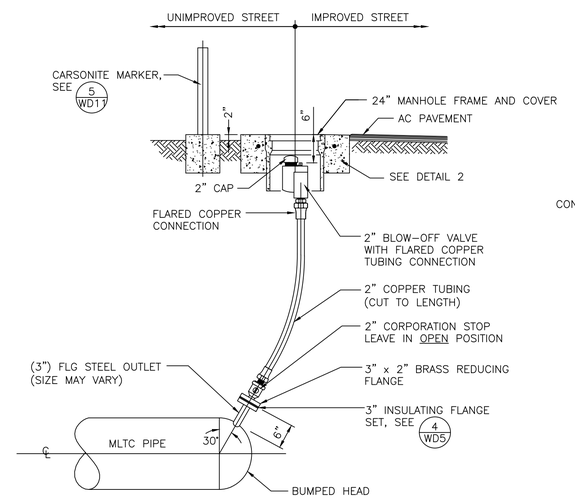

MANUAL AIR RELEASE ASSEMBLY (MLTC PIPE) (4)

NOT TO SCALE

W1, WD10

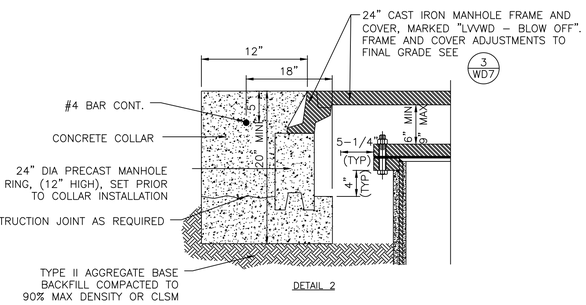

NOTE:

ALL COPPER TUBING AND BRASS PIPE SHALL BE WRAPPED WITH TWO LAYERS OF SIX (6) MIL POLYETHYLENE AND BACKFILLED ALL AROUND WITH 4" MINIMUM OF SAND.

LVVWD APPROVAL

APPROVED FOR CONSTRUCTION

LAS VEGAS VALLEY WATER DISTRICT PLANNING AND ENGINEERING SERVICES

PROJECT No. 139055 FIRST APPROVED DATE

NO.	REVISIONS	DATE
		APPROVED

CLARK COUNTY NEVADA

LAS VEGAS BLVD WATERLINE REPLACEMENT - TROPICANA AVE TO FLAMINGO RD (PHASE E/F)

CIVIL DETAILS - MAIN

CLARK COUNTY, NEVADA, DEPARTMENT OF PUBLIC WORKS

PROFESSIONAL ENGINEER - STATE OF NEVADA
RAY P. MONTOYA
Exp. 12/31/2021
CIVIL
No. 025817
10/08/2021

PROJECT No:	500-897-LV-EF	DRAWN BY:	GAG/KAS/KMT
DESIGNED BY:	ROM/GAG	CHECKED BY:	ALF/RPM/ROM
APPROVED BY			

Kimley»Horn
6671 Las Vegas Boulevard South, Suite 320
Las Vegas, Nevada 89119
Tel. No.(702) 862–3600

SCALE	
HORIZ:	N/A
VERT:	N/A
FIELD BOOK	

DRAWING NO. WD-10

SHT. 66 OF 80

L-2304

LAS VEGAS BOULEVARD WATERLINE IMPROVEMENTS

Reuse of and improper reliance on this document without written authorization and adaptation by Kimley-Horn and Associates, Inc. shall be without liability to Kimley-Horn and Associates, Inc.
Plotted by: Kimley-Horn and Associates, Inc.
Plot Date: Friday, Oct 08, 2021
User: Karl.Timm

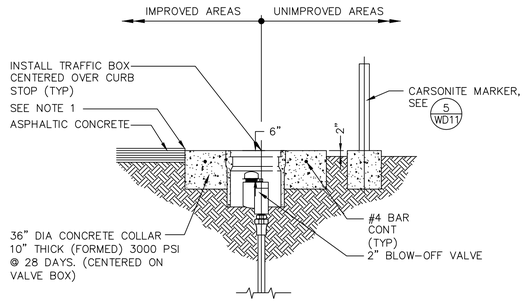

NOTES

1. FINAL RIM ELEVATION TO BE 1/8" TO 1/4" BELOW FINAL STREET GRADE.
2. MORE STRINGENT INSTALLATION REQUIREMENTS MAY BE IMPOSED BY THE ENTITY HAVING THE JURISDICTION OVER THE TRAFFIC BOX INSTALLATION LOCATION.
3. CONTRACTOR TO FORM CONCRETE COLLAR IN UNIMPROVED AREAS WITH SONOTUBE AND REMOVE PRIOR TO BACKFILL INSTALLATION (TYP).
4. SEE SPECIFICATIONS FOR ALL APPROVED PRODUCTS.

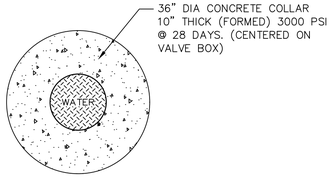

TRAFFIC BOX INSTALLATION (1)

NOT TO SCALE

WD10

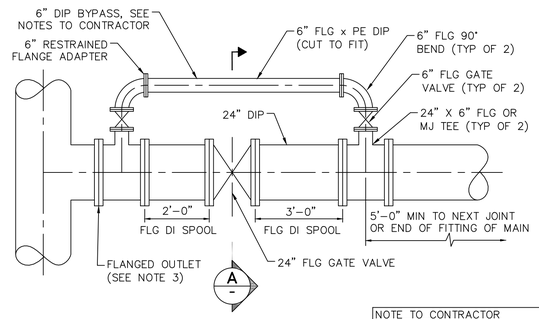

NOTE TO CONTRACTOR
6" BYPASS IS TO BE FULLY RESTRAINED

EXISTING PIPE DATA:
SEE DWG NO. W14 AND W18 FOR PIPE DATA

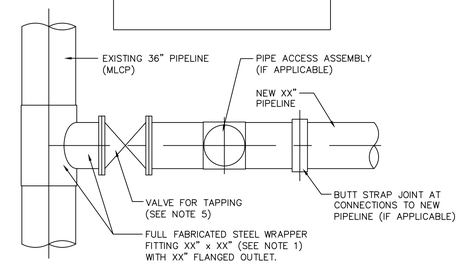

NOTES:

1. TAPPING FITTING SHALL BE FULL WRAPPER DESIGN AND DESIGNED IN ACCORDANCE WITH AWWA MANUAL M11.
2. DESIGN PRESSURE = 200 PSI
   STATIC PRESSURE = 150 PSI
3. TEST FABRICATED STEEL TAPPING FITTING PER SPECS SEC 753.
4. ALL FERROUS METALS SHALL BE COATED PER SPECS SEC 765 AND 754 OR CEMENT MORTAR LINED. APPLY REINFORCED MORTAR COATING AFTER COMPLETION.
5. TAPPING VALVE MAY BE REMOVED OR LEFT IN PLACE AS REQUIRED.
6. THE EXISTING PIPE SHALL REMAIN IN SERVICE, WITH WATER FLOWING, DURING ENTIRE TAPPING OPERATION.
7. VERIFY POSITION OF PROPOSED TAP PRIOR TO COMMENCING OPERATION. POSITION TAP AT LEAST 5 FEET FROM JOINT IN EXISTING PIPE.
8. PROVIDE SUPPORT FOR TAPPING VALVE AND TAPPING MACHINE.
9. CONTRACTOR SHALL VERIFY SIZE, THICKNESS, LINING AND COATING OF EXISTING PIPELINE PRIOR TO COMPLETION OF WET TAP.

WET TAP OF EXISTING STEEL MAINS (4)

NOT TO SCALE

W1, W2, W5, W14, W16, W18

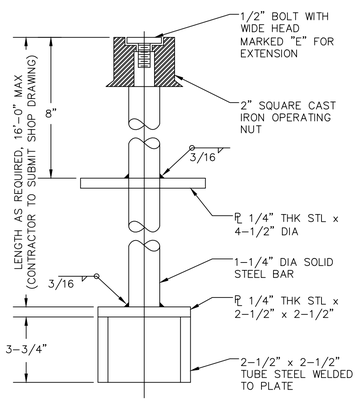

STEM EXTENSIONS 16' AND LESS

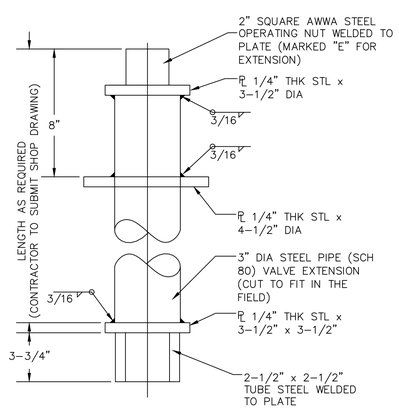

STEM EXTENSIONS GREATER THAN 16'

NOTES:

1. HOT DIP GALVANIZE AFTER FABRICATION.
2. CONTRACTOR TO SUBMIT SHOP DRAWINGS (TYP)

VALVE STEM EXTENSION (2)

NOT TO SCALE

W1, W3, W5, W6, W7, W8, W9, W10, W11, WD6, WD10

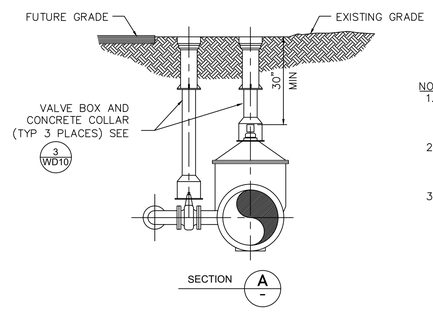

NOTES:

1. COAT AND WRAP VALVES, FLANGES, COUPLINGS AND OTHER EXPOSED METAL IN ACCORDANCE WITH SPEC SEC 765 AND 754.
2. INSTALL THRUST/ANCHOR BLOCKS AS REQUIRED. SEE PLAN AND PROFILE FOR LIMITS OF RESTRAINED JOINTS.
3. 24" GATE VALVES INSTALLED AS VALVED OUTLETS ARE REQUIRED TO BE FLANGED TO MAIN.

24" DIRECT BURIED GATE VALVE WITH BY-PASS INSTALLATION (DIP) (3)

NOT TO SCALE

W7

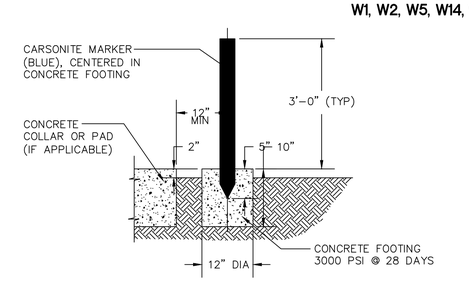

NOTE:
SEE SPECIFICATIONS FOR ALL APPROVED PRODUCTS.

CARSONITE MARKER INSTALLATION (5)

NOT TO SCALE

WD10, WD11

LVVWD APPROVAL

APPROVED FOR CONSTRUCTION

LAS VEGAS VALLEY WATER DISTRICT PLANNING AND ENGINEERING SERVICES

PROJECT No. 139055 FIRST APPROVED DATE

NO.	REVISIONS	DATE
		APPROVED

CLARK COUNTY NEVADA

LAS VEGAS BLVD WATERLINE REPLACEMENT - TROPICANA AVE TO FLAMINGO RD (PHASE E/F)

CIVIL DETAILS - MAIN

CLARK COUNTY, NEVADA, DEPARTMENT OF PUBLIC WORKS

PROFESSIONAL ENGINEER - STATE OF NEVADA
RAY P. MONTOYA
Exp. 12/31/2021
CIVIL
No. 025877
10/08/2021

PROJECT No: 500-897-LV-EF
DESIGNED BY: ROM/GAG
APPROVED BY
DRAWN BY: GAG/KAS/KMT
CHECKED BY: ALF/RPM/ROM

Kimley»Horn
6671 Las Vegas Boulevard South, Suite 320
Las Vegas, Nevada 89119
Tel. No.(702) 862-3600

SCALE
HORIZ: N/A
VERT: N/A
FIELD BOOK

DRAWING NO.
WD-11
SHT. 67 OF 80
L-2304

LAS VEGAS BOULEVARD WATERLINE IMPROVEMENTS

Reuse of and improper reliance on this document without written authorization and adaptation by Kimley-Horn and Associates, Inc. shall be without liability to Kimley-Horn and Associates, Inc.
Drawings prepared herein, in pre-submittal or draft form, is intended only for the specific purpose and client for which it was prepared.

User: Kyle.Timlin
Path: K:\LVC_Water\Resources\109834-3500_Lasvegasblvd\CADD\LVB Phase E Water Plans\WD11-WD13.dwg

CROSS

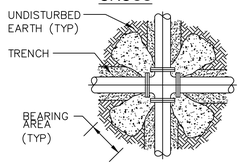

(FIGURE 1)

TEE, PLUG OR CAP

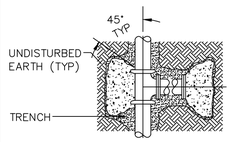

(FIGURE 2)

HORIZONTAL OR UPWARD VERTICAL BEND

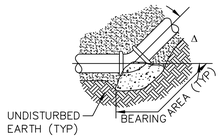

(FIGURE 3)

DOWNWARD VERTICAL BEND

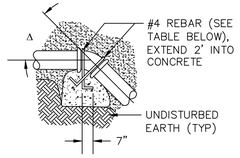

(FIGURE 4)

NOTE:
COAT AND WRAP ALL METAL SURFACES IN ACCORDANCE WITH SECTION 754 OF THE LVVWD SPECS, PROTECTIVE COATINGS. ALL CONCRETE SHALL BE 3000 PSI MINIMUM, 28 DAYS COMPRESSIVE STRENGTH. CONCRETE IS TO BE PLACED AGAINST UNDISTURBED EARTH. TABLE BELOW DENOTES MINIMUM BEARING AREA OR VOLUME OF THRUST BLOCK. SPECIAL DESIGN CALCULATIONS ARE TO BE SUBMITTED TO LVVWD FOR APPROVAL IF ALLOWABLE SOIL BEARING CAPACITY IS LESS THAN 3000 PSF. ALL VERTICAL SURFACES NOT BEARING AGAINST UNDISTURBED EARTH SHALL BE FORMED.

	BEARING AREA IN SQ FT						CONC/CU YDS		
PIPE ID	FIGURE	FIGURE	FIGURE 3, Δ				FIGURE 4, Δ		
	1	2	90°	45°	$22\frac{1}{2}$°	$11\frac{1}{4}$°	45°	$22\frac{1}{2}$°	$11\frac{1}{4}$°
4"	2	2	2	2	1	1	1.0	0.5	0.5
6"	2	3	4	2	1	1	1.5	1.0	0.5
8"	3	5	7	4	2	1	3.0	1.5	1.0
10"	4	8	11	6	3	2	4.0	2.5	1.5
12"	6	11	15	8	4	2	6.0	3.0	1.5
16"	10	20	28	15	8	4	10.5 *	6.0	3.0
18"	13	25	35	19	10	5	13.5 *	7.5	3.5
20"	16	31	44	24	12	6	16.0 **	9.0	4.5
24"	22	44	63	34	17	9	23.5 **	12.5 *	6.5

* #5 REBAR ** #6 REBAR

NOTE:
USE OF THRUST BLOCKS FOR PIPE DIAMETERS GREATER THAN 12" REQUIRES PRIOR DISTRICT APPROVAL AND WILL BE EVALUATED ON A CASE BY CASE BASIS.

THRUST BLOCK INSTALLATION (1)

NOT TO SCALE

WD9, WD12

LEGEND: d = LARGER DIAMETER PIPE SIZE

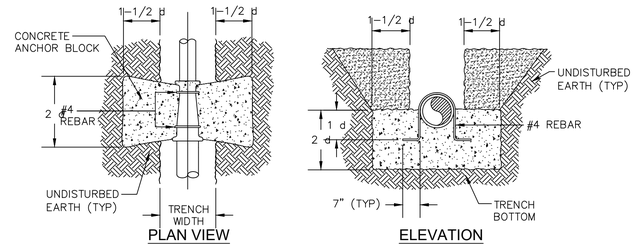

IN-LINE REDUCERS

LEGEND: d = NOMINAL PIPE SIZE

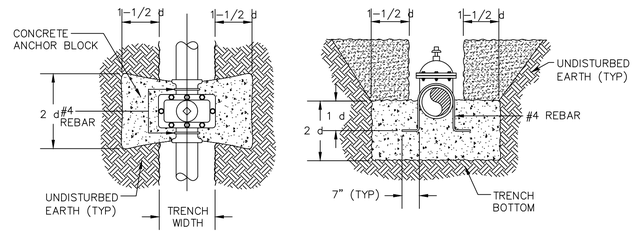

IN-LINE GATE VALVES

LEGEND: d = NOMINAL PIPE SIZE

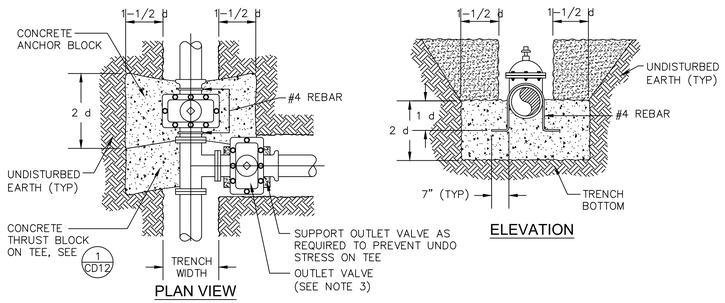

TEE GATE VALVES

NOTES:
1. ALL CONCRETE SHALL BE 3000 PSI MINIMUM 28 DAYS COMPRESSIVE STRENGTH.
2. ALL VALVES AND EXPOSED REBAR TO BE COATED AND WRAPPED IN ACCORDANCE WITH SECTION 754 OF THE LVVWD SPECS, PROTECTIVE COATINGS.
3. WHEN PIPE IS INSTALLED BETWEEN TEE AND OUTLET VALVE AN ADDITIONAL CONCRETE ANCHOR BLOCK WILL BE REQUIRED ON THE OUTLET VALVE.

ANCHOR BLOCK DETAILS FOR REDUCERS AND GATE VALVES (2)

NOT TO SCALE

WD4, WD9

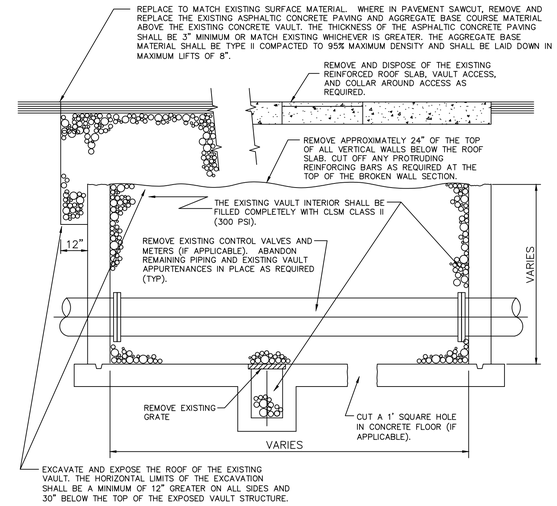

EXISTING VAULT STRUCTURE ABANDONMENT (3)

NOT TO SCALE

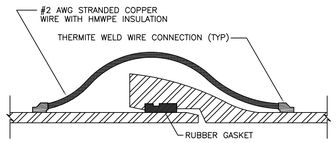

NOTE
INSTALL TWO BOND WIRES AT EACH PIPE JOINT.
MAXIMUM LENGTH OF BOND WIRES IS 21-INCHES
FOR 12-INCH DIAMETER AND SMALLER PIPE, USE #4 AWG BOND CABLES

PUSH-ON JOINT BOND DETAIL DUCTILE IRON PIPE (4)

NOT TO SCALE

LVVWD APPROVAL

APPROVED FOR CONSTRUCTION

LAS VEGAS VALLEY WATER DISTRICT PLANNING AND ENGINEERING SERVICES

PROJECT No. 139055 FIRST APPROVED DATE

NO.	REVISIONS	DATE
		APPROVED

CLARK COUNTY NEVADA

LAS VEGAS BLVD WATERLINE REPLACEMENT - TROPICANA AVE TO FLAMINGO RD (PHASE E/F)

CIVIL DETAILS - MAIN

CLARK COUNTY, NEVADA, DEPARTMENT OF PUBLIC WORKS

PROFESSIONAL ENGINEER - STATE OF NEVADA
RAY P. MONTOYA
Exp. 12/31/2021
CIVIL
No. 025877
10/08/2021

PROJECT No: 500-897-LV-EF
DESIGNED BY: ROM/GAG
APPROVED BY
DRAWN BY: GAG/KAS/KMT
CHECKED BY: ALF/RPM/ROM

Kimley»Horn
6671 Las Vegas Boulevard South, Suite 320
Las Vegas, Nevada 89119
Tel. No.(702) 862-3600

SCALE
HORIZ: N/A
VERT: N/A
FIELD BOOK

DRAWING NO.
WD-12
SHT. 68 OF 80
L-2304

User: Kori.Timin
Path: K:\TUC_Waterresources\095833000_LasVegasBlvd\CADD\LVB Phase E Water Plans\WD11-WD13.dwg
Kimley-Horn and Associates, Inc. Copyright 2021
Reproduction or reuse of this drawing or any portion thereof without written consent of Kimley-Horn and Associates, Inc. is prohibited. This document is intended only for the specific purpose and client for which it was prepared. Reuse of and improper reliance on this document without written authorization and adaptation by Kimley-Horn and Associates, Inc. shall be without liability to Kimley-Horn and Associates, Inc.

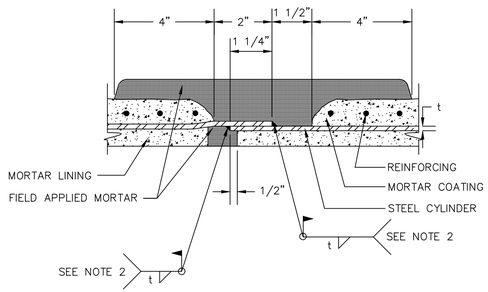

NOTES:

1. SEE SPECS SEC 752 FOR MORTAR LINED AND COATED STEEL PIPE.
2. WELD OUTSIDE ON PIPE SMALLER THAN 36". WELD INSIDE ON PIPE GREATER THAN OR EQUAL TO 36", UNLESS APPROVED BY ENGINEER.

LAP - WELDED SLIP JOINT ALTERNATE "A" FIELD WELDED (1)

NOT TO SCALE

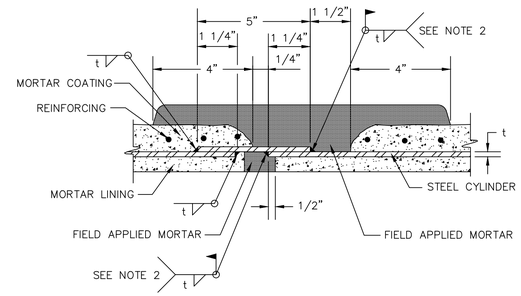

NOTES:

1. SEE SPECS SEC 752 FOR MORTAR LINED AND COATED STEEL PIPE.
2. WELD OUTSIDE ON PIPE SMALLER THAN 36". WELD INSIDE ON PIPE GREATER THAN OR EQUAL TO 36", UNLESS APPROVED BY ENGINEER.

LAP - WELDED SLIP JOINT ALTERNATE "B" FIELD WELDED (2)

NOT TO SCALE

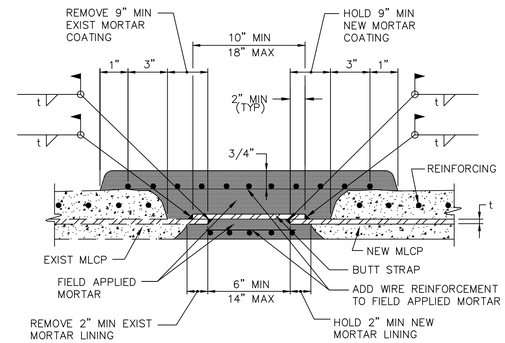

NOTE:

SEE SPECS SEC 752 FOR MORTAR LINED AND COATED STEEL PIPE.

BUTT STRAP JOINT AT MLCP CONNECTIONS TO EXISTING MLCP (3)

NOT TO SCALE

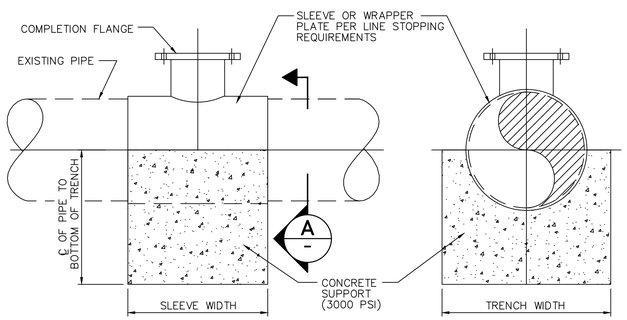

LINE STOPPING SUPPORT DETAIL (4)

NOT TO SCALE

W5, W18

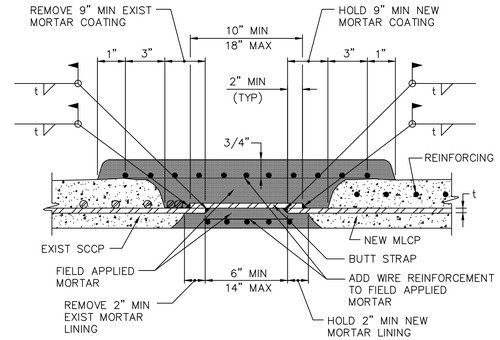

NOTES:

1. SEE SPECS SEC 752 FOR MORTAR LINED AND COATED STEEL PIPE.
2. BEFORE ANY CUT IS MADE TO THE EXISTING SCCP, TACK WELD THE EXISTING SPIRAL ROD WRAP OUTSIDE OF THE CUT AREA TO MAINTAIN TENSION, THEN CUT THE ROD WRAP AT APPROXIMATELY THE CENTER OF THE AREA TO BE REMOVED AND USING THE EXCESS ROD WRAP, TENSION 1-1/2 FULL OF THE ROD WRAP SNUGLY AROUND AND WELD TO THE CYLINDER PARALLEL TO WHERE THE CUT IN THE EXISTING SCCP IS TO BE MADE.

BUTT STRAP JOINT AT MLCP CONNECTIONS TO EXISTING SCCP (5)

NOT TO SCALE

W2, W3, W5, W6, W8

LVVWD APPROVAL

APPROVED FOR CONSTRUCTION

LAS VEGAS VALLEY WATER DISTRICT PLANNING AND ENGINEERING SERVICES

PROJECT No. 139055 FIRST APPROVED DATE

NO.	REVISIONS	DATE
		APPROVED

CLARK COUNTY NEVADA

LAS VEGAS BLVD WATERLINE REPLACEMENT - TROPICANA AVE TO FLAMINGO RD (PHASE E/F)

CIVIL DETAILS - MAIN

CLARK COUNTY, NEVADA, DEPARTMENT OF PUBLIC WORKS

PROFESSIONAL ENGINEER - STATE OF NEVADA
RAY P. MONTOYA
Exp. 12/31/2021
CIVIL
No. 025877
10/08/2021

PROJECT No: 500-897-LV-EF
DESIGNED BY: ROM/GAG
APPROVED BY
DRAWN BY: GAG/KAS/KMT
CHECKED BY: ALF/RPM/ROM

Kimley»Horn
6671 Las Vegas Boulevard South, Suite 320
Las Vegas, Nevada 89119
Tel. No.(702) 862-3600

SCALE
HORIZ: N/A
VERT: N/A
FIELD BOOK

DRAWING NO.
WD-13
SHT. 69 OF 80
L-2304

LAS VEGAS BOULEVARD WATERLINE IMPROVEMENTS

User: Kurt.Timm
Path: A:\TFC_WaterResources\139853.5000_LasVegasBlvd\CADD\v18 Phase E Water Plans\WD11-WD13.dwg
Any reproduction or modification of this drawing, in whole or in part, without written authorization and adaptation by Kimley-Horn and Associates, Inc. shall be without liability to Kimley-Horn and Associates, Inc.
Drawings provided herein, in whole or in part, are intended only for the specific purpose and client for which it was prepared. Reuse of and improper reliance on this document

UNIFORM DESIGN STANDARDS FOR WATER DISTRIBUTION SYSTEMS

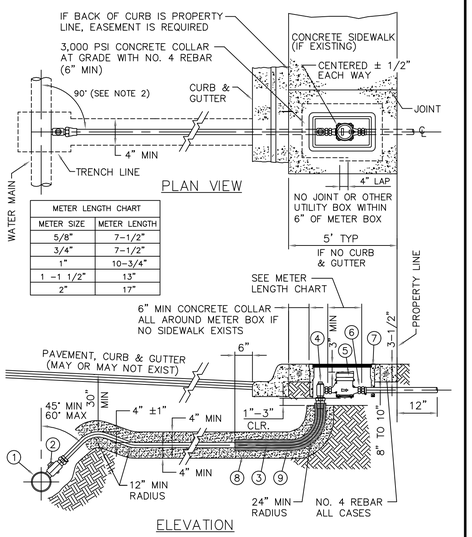

METER LENGTH CHART	
METER SIZE	METER LENGTH
5/8"	7-1/2"
3/4"	7-1/2"
1"	10-3/4"
1 -1 1/2"	13"
2"	17"

FOR NOTES AND LEGEND SEE SHEET 2

NOT TO SCALE	FILE NAME: UDACS-4 DRAWN BY: SDM CHECKED BY: SPM	NEW SERVICE INSTALLATION WITH SINGLE ANGLE METER STOPS COMMERCIAL & RESIDENTIAL GREATER THAN 1/4 ACRE GROSS 5/8", 3/4", 1", 1-1/2", AND 2" METER SIZES	UDACS PLATE NO. 4 SHEET 1 OF 2

UNIFORM DESIGN STANDARDS FOR WATER DISTRIBUTION SYSTEMS

LEGEND

1. SERVICE SADDLE
2. CORPORATION STOP (BALL TYPE).
3. SERVICE LATERAL. SIZE TO MATCH METER (1" MINIMUM)
4. UPSTREAM BALL ANGLE METER STOP TO MATCH METER SIZE (1" x 1" MINIMUM) WITH LOCK WING AND WITHOUT LEVER HANDLE. FOR ALL 5/8" AND 3/4" METERS USE A 1" x 3/4" ADAPTER.
5. WATER METER, AGENCY SUPPLIED, CONTRACTOR INSTALLED (SEE METER LENGTH CHART).
6. TAIL PIECE (1" MIN). TAIL PIECE SHALL BE THE SAME SIZE AND MATERIAL AS SERVICE LATERAL UNLESS OTHERWISE SPECIFIED (OR IF BACKFLOW ASSEMBLY IS REQUIRED). INSTALL 1" x 3/4" ADAPTER AT TAIL PIECE FOR 5/8" OR 3/4" METERS.
7. METER BOX INSTALLED TO FINAL GRADE (SIZE TO MATCH METER, 1" MIN)
8. SAND BACKFILL
9. PREFORMED POLYFOAM PIPE INSULATION (1/2" MIN), MAY BE USED IN LIEU OF SAND BACKFILL AT METER BOX

NOTES

1. PROTECT SERVICE LATERAL DURING CONSTRUCTION. DAMAGED SERVICE LATERALS WILL REQUIRE ENTIRE LATERAL REPLACEMENT FROM ANGLE METER STOP TO CORPORATION STOP.
2. CUL-DE-SAC SERVICE LATERALS MUST FOLLOW THE MOST DIRECT ROUTE POSSIBLE BETWEEN SERVICE SADDLE AND ANGLE METER STOP, HORIZONTAL BENDING RADIUS ALLOWED FOR 1" TUBING IS 12" MIN. MAXIMUM DEFLECTION ANGLE ALLOWED IS 90°.
3. USE OF 5/8" METERS NOT APPROVED BY ALL AGENCIES.
4. FLUSH LATERAL PRIOR TO SETTING METER.
5. METERS SHALL BE LOCATED OUTSIDE OF DRIVEWAYS WITHIN EXISTING OR FUTURE SIDEWALK AREAS, OR AS SPECIFIED BY AGENCY.
6. ADDITIONAL TRENCH BACKFILL REQUIREMENTS ABOVE SERVICE LATERALS SEE UDACS PLATES 16, 17, 18, AND 19.
7. ONE ADDITIONAL FLARED COUPLING, OR COMPRESSION COUPLING IS ALLOWED BETWEEN THE CORPORATION STOP, AND THE ANGLE METER STOP IF THE TOTAL LATERAL LENGTH IS GREATER THAN 40' (FOR 1-1/2" OR 2" LATERAL SIZES ONLY)

NOT TO SCALE	FILE NAME: UDACS-4 DRAWN BY: SDM CHECKED BY: SPM	NEW SERVICE INSTALLATION WITH SINGLE ANGLE METER STOPS COMMERCIAL & RESIDENTIAL GREATER THAN 1/4 ACRE GROSS 5/8", 3/4", 1", 1-1/2", AND 2" METER SIZES	UDACS PLATE NO. 4 SHEET 2 OF 2

UNIFORM DESIGN STANDARDS FOR WATER DISTRIBUTION SYSTEMS

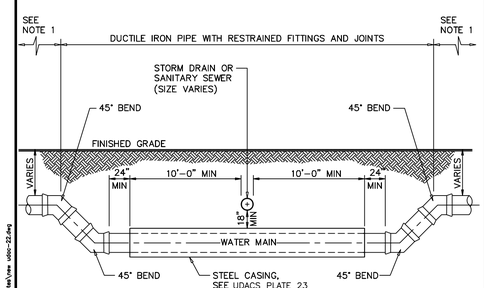

NOTES

1. PROVIDE LENGTH OF RESTRAINED JOINTS PAST 45° BEND (SUBMIT CALCULATIONS AND IDENTIFY ON PLANS).
2. IDENTIFY TRANSITION FROM DUCTILE IRON PIPE ON PLANS IF PIPE MATERIAL CHANGES.
3. SEE UDACS PLATES 16, 17, 18, AND 19 FOR TRENCH BACKFILL REQUIREMENTS.

NOT TO SCALE	FILE NAME: UDACS-22 DRAWN BY: SDM CHECKED BY: SPM	STORM DRAIN OR SANITARY SEWER NEW WATER MAIN CROSSING	UDACS PLATE NO 22 SHEET 1 OF 1

UNIFORM DESIGN STANDARDS FOR WATER DISTRIBUTION SYSTEMS

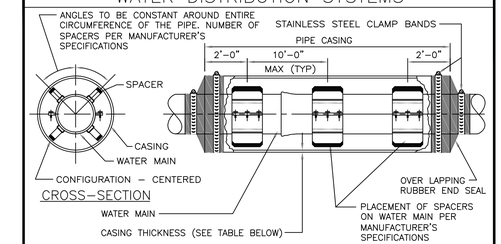

CASING TABLE		
PIPE SIZE	CASING OD	THICKNESS *
6"	16"	1/4"
8"	18"	1/4"
10"	20"	5/16"
12"	24"	5/16"
16"	30"	3/8"
18"	30"	3/8"
20"	36"	1/2"
24"	42"	1/2"

* CASING INSTALLATIONS OVER 25 FEET BELOW FINISHED GRADE TO HAVE THICKNESS DETERMINED BY A NEVADA LICENSED PROFESSIONAL ENGINEER.

* CASING INSTALLATIONS UNDER RAILROAD TRACKS TO HAVE THICKNESS DETERMINED BY A NEVADA LICENSED PROFESSIONAL ENGINEER AND APPROVED BY UNION PACIFIC RAILROAD.

NOTES:

1. STEEL PIPE CASING SHALL CONFORM TO THE REQUIREMENTS OF ASTM A283, GRADE B, C, OR D. ALL JOINTS SHALL BE WELDED. INTERIOR JOINTS SHALL BE GROUND TO A SMOOTH FINISH. ALL WELDING SHALL BE PERFORMED IN ACCORDANCE WITH AWWA C206, "AWWA STANDARD FOR FIELD WELDING OF STEEL WATER PIPE." COATINGS FOR STEEL CASING ARE NOT REQUIRED.
2. STEEL PIPE CASING SHALL BE INSTALLED SYMMETRICAL ABOUT WATER MAIN CENTERLINE (TYP). PIPE CASING SHALL BE LAID TRUE TO LINE AND GRADE WITH NO BENDS OR CHANGES IN GRADE FOR THE FULL LENGTH OF THE CASING.
3. AGENCY APPROVED CASING SPACERS AND END SEALS SHALL BE INSTALLED PER MANUFACTURER'S SPECIFICATIONS. USE A "CENTERED" CONFIGURATION AND PROVIDE THE MANUFACTURER WITH THE FOLLOWING: (PIPE OD, CASING ID, AND CASING LENGTH).
4. ALL PIPE JOINTS WITHIN THE CASING ARE TO BE EXTERNALLY RESTRAINED.
5. CASING TO BE FILLED (IF REQUIRED). SEE AGENCY FOR FILL MATERIALS AND ADDITIONAL REQUIREMENTS.
6. CASINGS INSTALLED BY JACK AND BORE METHOD SHALL BE INSTALLED TO THE GRADE SHOWN ON THE DRAWINGS, WITH A MAXIMUM VERTICAL DEVIATION OF +0" AND −2", AND A MAXIMUM HORIZONTAL DEVIATION OF ±2" PROVIDED THE ALIGNMENT DOES NOT CONFLICT WITH OTHER UTILITIES AND/OR RIGHTS-OF-WAY.

NOT TO SCALE	FILE NAME: UDACS-23 DRAWN BY: SDM CHECKED BY: SPM	CASING INSTALLATION	UDACS PLATE NO. 23 SHEET 1 OF 1

LVVWD APPROVAL

APPROVED FOR CONSTRUCTION

LAS VEGAS VALLEY WATER DISTRICT PLANNING AND ENGINEERING SERVICES

PROJECT No. 139055 FIRST APPROVED DATE

NO.	REVISIONS	DATE
		APPROVED

CLARK COUNTY NEVADA

LAS VEGAS BLVD WATERLINE REPLACEMENT - TROPICANA AVE TO FLAMINGO RD (PHASE E/F)

CIVIL DETAILS - LATERAL

CLARK COUNTY, NEVADA, DEPARTMENT OF PUBLIC WORKS

PROFESSIONAL ENGINEER - STATE OF NEVADA
RAY P. MONTOYA
Exp. 12/31/2021
CIVIL
No.025877
10/08/2021

PROJECT No: 500-897-LV-EF
DESIGNED BY: ROM/GAG
APPROVED BY
DRAWN BY: GAG/KAS/KMT
CHECKED BY: ALF/RPM/ROM

Kimley»Horn
6671 Las Vegas Boulevard South, Suite 320
Las Vegas, Nevada 89119
Tel. No.(702) 862-3600

SCALE
HORIZ: N/A
VERT: N/A
FIELD BOOK

DRAWING NO.
WD-14
SHT. 70 OF 80
L-2304

User: Gerardo.Gonzalez
Path: K:\LVC_WaterResources\092833.3000_LasVegasBlvd\CADD\LVB Phase E Water Proj\WD14-WD15.dwg
Reuse of and improper reliance on this document without written authorization and adaptation by Kimley-Horn and Associates, Inc. shall be without liability to Kimley-Horn and Associates, Inc.
Design provided herein is for approval of permits, is intended only for the specific purpose and client for which it was prepared.

LAS VEGAS BOULEVARD WATERLINE IMPROVEMENTS

UNIFORM DESIGN STANDARDS FOR WATER DISTRIBUTION SYSTEMS

LEGEND: d = LARGER DIAMETER PIPE SIZE

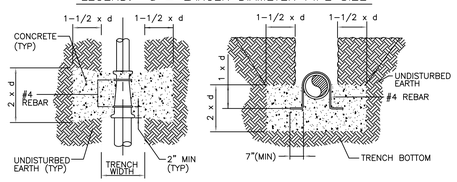

PLAN VIEW ELEVATION

REDUCERS

LEGEND: d = NOMINAL PIPE SIZE

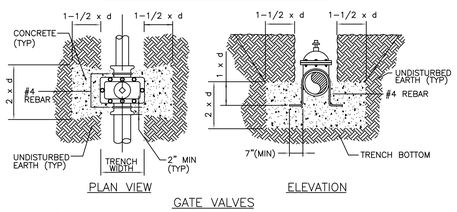

PLAN VIEW ELEVATION

GATE VALVES

NOTES:

1. ALL CONCRETE SHALL BE 3000 PSI MINIMUM 28 DAYS COMPRESSIVE STRENGTH.
2. ALL VALVES, FITTINGS, AND APPURTENANCES SHALL BE COATED AND WRAPPED IN ACCORDANCE WITH SECTION 3, PROTECTIVE COATINGS.
3. EXPOSED (NOT ENCASED IN CONCRETE) REBAR SHALL BE WRAPPED IN 10 MIL DIELECTRIC TAPE.
4. REBAR SHALL BE FORMED AND INSTALLED TO PROVIDE FULL CONTACT ON THE FITTING TO BE RESTRAINED.

NOT TO SCALE	FILE NAME: UDACS-30 DRAWN BY: SDM CHECKED BY: SPM	ANCHOR BLOCK DETAILS FOR IN-LINE REDUCERS OR GATE VALVES 6" THROUGH 12" DIAMETER	UDACS PLATE NO. 30 SHEET 1 OF 1

08:11 Plot ● 12/31/08 I:\UDACS\section 5 - standard plates_New Numbered Updated Plates\new udac-30.dwg

UNIFORM DESIGN STANDARDS FOR WATER DISTRIBUTION SYSTEMS

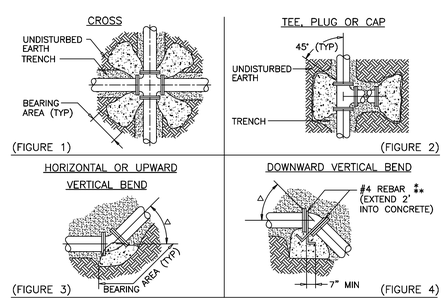

PIPE ID	BEARING AREA IN SQ FT						CONC/CU YDS		
	FIGURE 1	FIGURE 2	FIGURE 3, Δ				FIGURE 4, Δ		
			90°	45°	22½°	11¼°	45°	22½°	11¼°
4"	2	2	2	2	1	1	1.0	0.5	0.5
6"	2	3	4	2	1	1	1.5	1.0	0.5
8"	3	5	7	4	2	1	3.0	1.5	1.0
10"	4	8	11	6	3	2	4.0	2.5	1.5
12"	6	11	15	8	4	2	6.0	3.0	1.5
SEE NOTE 9							10.5 *	6.0	3.0
							13.5 *	7.5	3.5
							16.0 *	9.0	4.5
							23.5	12.5 *	6.5

* #5 REBAR
** #6 REBAR

NOT TO SCALE	FILE NAME: UDACS-31 DRAWN BY: SDM CHECKED BY: SPM	THRUST BLOCK INSTALLATION	UDACS PLATE NO. 31 SHEET 1 OF 2

08:12 Plot ● 12/31/08 I:\UDACS\section 5 - standard plates_New Numbered Updated Plates\new udac-31.dwg

UNIFORM DESIGN STANDARDS FOR WATER DISTRIBUTION SYSTEMS

GENERAL NOTES:

1. VALVES, FITTINGS AND APPURTENANCES SHALL BE COATED AND WRAPPED IN ACCORDANCE WITH SECTION 3, PROTECTIVE COATINGS.
2. EXPOSED (NOT ENCASED IN CONCRETE) REBAR SHALL BE WRAPPED IN 10 MIL DIELECTRIC TAPE.
3. REBAR SHALL BE FORMED AND INSTALLED TO PROVIDE FULL CONTACT ON THE FITTING TO BE RESTRAINED.
4. ALL CONCRETE SHALL BE 3000 PSI MINIMUM, 28 DAYS COMPRESSIVE STRENGTH. CONCRETE IS TO BE PLACED AGAINST UNDISTURBED EARTH.
5. THE TABLE BELOW DENOTES MINIMUM BEARING AREA OR VOLUME OF THRUST BLOCK. SPECIAL DESIGN CALCULATIONS ARE TO BE SUBMITTED FOR APPROVAL IF ALLOWABLE SOIL BEARING CAPACITY IS LESS THAN 3000 PSF.
6. ALL VERTICAL SURFACES NOT BEARING AGAINST UNDISTURBED EARTH SHALL BE FORMED.
7. RESTRAINIED JOINTS MAY BE UTILIZED IN LIEU OF THRUST BLOCKS WHEN IDENTIFIED ON THE PLANS BY THE ENGINEER AND APPROVED BY THE AGENCY.
8. USE OF 5° BENDS REQUIRES AGENCY APPROVAL AND CAN BE UTILIZED IN HORIZONTAL ORIENTATION ONLY.
9. USE OF THRUST BLOCKS FOR PIPE DIAMETERS GREATER THAN 12" REQUIRES PRIOR AGENCY APPROVAL AND WILL BE EVALUATED ON A CASE BY CASE BASIS.

NOT TO SCALE	FILE NAME: UDACS-31 DRAWN BY: SDM CHECKED BY: SPM	THRUST BLOCK INSTALLATION	UDACS PLATE NO. 31 SHEET 2 OF 2

UNIFORM DESIGN STANDARDS FOR WATER DISTRIBUTION SYSTEMS

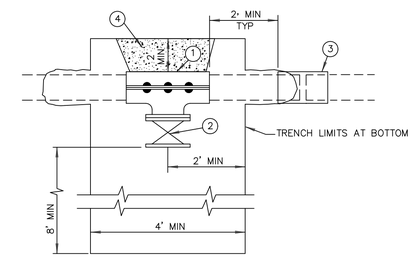

ITEM	DESCRIPTION
1	TAPPING SLEEVE
2	GATE VALVE
3	COUPLING, COLLAR, FITTING, VALVE OR SERVICE SADDLE
4	CONCRETE THRUST BLOCK, SEE UDACS PLATE 31

NOTES:

1. CLEARANCE FROM A COLLAR OR PIPE JOINT SHALL BE A MINIMUM OF 2 FEET FROM THE EDGE OF TAPPING SLEEVE TO COLLAR OR PIPE JOINT. THE EXISTING PIPE SHALL BE EXPOSED SUFFICIENTLY TO ENSURE THAT SUCH MINIMUM CLEARANCE IS PROVIDED.
2. TRENCH SHALL MEET ALL LOCAL, STATE AND FEDERAL REQUIREMENTS.
3. VALVE TO BE SUPPORTED DURING THE WET TAP PROCESS.
4. USE AN AGENCY APPROVED TAPPING SLEEVE BASED ON PIPE MATERIAL AND TAP SIZE.
5. ALL TAPS TO BE COMPLETED ON HORIZONTAL PIPE ALIGNMENTS ONLY.

NOT TO SCALE	FILE NAME: UDACS-34 DRAWN BY: SDM CHECKED BY: SPM	EXCAVATION FOR WET TAPS	UDACS PLATE NO. 34 SHEET 1 OF 1

08:14 Plot ● 12/31/08 I:\UDACS\section 5 - standard plates_New Numbered Updated Plates\new udac-34.dwg

LVVWD APPROVAL

APPROVED FOR CONSTRUCTION

LAS VEGAS VALLEY WATER DISTRICT PLANNING AND ENGINEERING SERVICES

PROJECT No. 139055 FIRST APPROVED DATE

NO.	REVISIONS	DATE
		APPROVED

CLARK COUNTY NEVADA

LAS VEGAS BLVD WATERLINE REPLACEMENT - TROPICANA AVE TO FLAMINGO RD (PHASE E/F)

CIVIL DETAILS - LATERAL

CLARK COUNTY, NEVADA, DEPARTMENT OF PUBLIC WORKS

PROFESSIONAL ENGINEER - STATE OF NEVADA
RAY P. MONTOYA
Exp. 12/31/2021
CIVIL
No. 025877
10/08/2021

PROJECT No: 500-897-LV-EF DRAWN BY: GAG/KAS/KMT
DESIGNED BY: ROM/GAG CHECKED BY: ALF/RPM/ROM
APPROVED BY

Kimley»Horn
6671 Las Vegas Boulevard South, Suite 320
Las Vegas, Nevada 89119 Tel. No.(702) 862-3600

SCALE
HORIZ: N/A
VERT: N/A
FIELD BOOK

DRAWING NO.
WD-15
SHT. 71 OF 80
L-2304

Reuse of and improper reliance on this document without written authorization and adaptation by Kimley-Horn and Associates, Inc. shall be without liability to Kimley-Horn and Associates, Inc.
Reproduction, reuse, or disclosure to third parties or for any purpose other than those intended only for the specific purpose and client for which it was prepared.

User: Gerardo.Gonzalez
Path: K:\TUC_Waterresources\098313000_LasVegasBlvd\CADD\LVB Phase E Water Plans\WD14-WD15.dwg

UNIFORM DESIGN STANDARDS FOR WATER DISTRIBUTION SYSTEMS

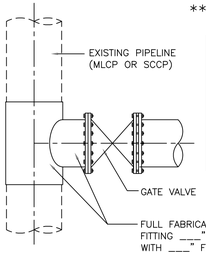

** AGENCY TO PROVIDE EXISTING PIPE DATA AND PRESSURE, ENGINEER TO SHOW ON PLANS

EXISTING PIPE DATA:	
STEEL CYLINDER OD:	____"
CYLINDER THICKNESS:	____"
LINING THICKNESS:	____"
COATING THICKNESS:	____"
ROD THICKNESS: (IF APPLICABLE)	____"

** ACTUAL SIZE OF WRAPPER FITTING TO BE CALCULATED BY ENGINEER.

NOTES:

1. TAPPING FITTING SHALL BE FULL WRAPPER DESIGN AND DESIGNED IN ACCORDANCE WITH AWWA MANUAL M11 AND INSTALLED IN ACCORDANCE WITH UDAC SECTION 3.15.
2. DESIGN PRESSURE = ____ PSI ** AGENCY TO PROVIDE
3. TEST FABRICATED STEEL TAPPING FITTING PER AGENCY REQUIREMENTS
4. ALL FERROUS METALS SHALL BE COATED PER SECTION 3, PROTECTIVE COATINGS. APPLY REINFORCED MORTAR COATING AFTER COMPLETION.
5. CONCRETE THRUST BLOCKS TO BE PROVIDED, SEE PLATE 31 OR AS SHOWN ON DRAWINGS
6. THE EXISTING PIPE SHALL REMAIN IN SERVICE, WITH WATER FLOWING, DURING ENTIRE TAPPING OPERATION, UNLESS OTHERWISE APPROVED BY AGENCY.
7. VERIFY POSITION OF PROPOSED TAP PRIOR TO COMMENCING OPERATION. POSITION TAP AT LEAST 5 FEET FROM JOINT IN EXISTING PIPE.
8. VALVE TO BE SUPPORTED DURING THE WET TAP PROCESS.
9. CONTRACTOR SHALL VERIFY SIZE, THICKNESS, LINING AND COATING OF EXISTING PIPELINE PRIOR TO COMPLETION OF WET TAP.
10. ALL TAPS TO BE COMPLETED ON HORIZONTAL PIPE ALIGNMENTS ONLY.

NOT TO SCALE	FILE NAME: UDACS-35 DRAWN BY: SDM CHECKED BY: SPM	WET TAP OF EXISTING STEEL MAINS	UDACS PLATE NO. 35 SHEET 1 OF 1

08:17 Plot ● 12/21/08 I:\UDACS\section 5 - standard plates_New Numbered Updated Plates\new udac-35.dwg

UNIFORM DESIGN STANDARDS FOR WATER DISTRIBUTION SYSTEMS

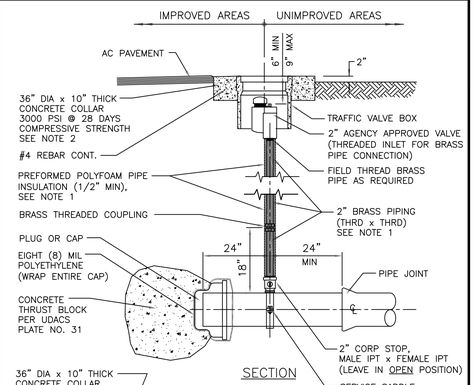

SECTION

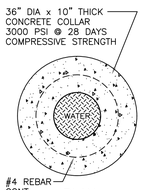

PLAN

NOTES:

1. ALL BRASS PIPING SHALL BE BACKFILLED ALL AROUND WITH 4" MINIMUM OF SAND OR PREFORMED POLYFOAM PIPE INSULATION (1/2" MIN).
2. FINAL RIM ELEVATION TO BE 1/8" TO 1/4" BELOW FINAL STREET GRADE.
3. MORE STRINGENT INSTALLATION REQUIREMENTS MAY BE IMPOSED BY THE ENTITY HAVING THE JURISDICTION OVER THE TRAFFIC VALVE BOX INSTALLATION LOCATION.
4. CONTRACTOR TO FORM CONCRETE COLLAR IN UNIMPROVED AREAS WITH SONOTUBE OR EQUAL AND REMOVE PRIOR TO BACKFILL INSTALLATION (TYP).

NOT TO SCALE	FILE NAME: UDACS-36 DRAWN BY: SDM CHECKED BY: SPM	2" MANUAL BLOW-OFF ASSEMBLY FOR P.V.C. OR D.I. PIPE	UDACS PLATE NO. 36 SHEET 1 OF 1

09:10 Plot ● 02/26/09 I:\UDACS\section 5 - standard plates_New Numbered Updated Plates\new udac-36.dwg

UNIFORM DESIGN STANDARDS FOR WATER DISTRIBUTION SYSTEMS

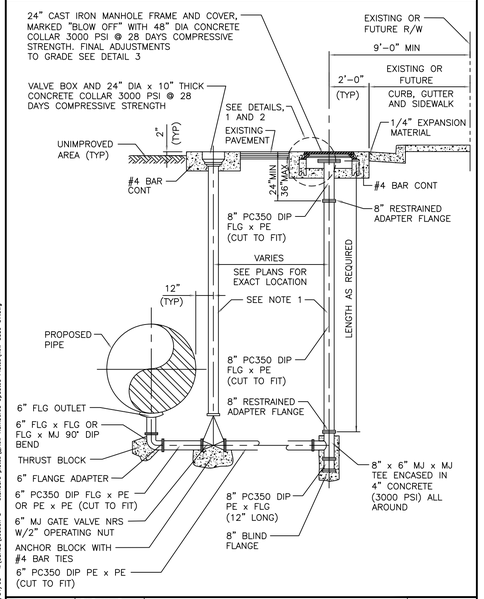

NOT TO SCALE	FILE NAME: UDACS-37 DRAWN BY: SDM CHECKED BY: SPM	6" MANUAL BLOW-OFF ASSEMBLY FOR P.V.C. OR D.I. PIPE (INSTALLATION AT LOW POINTS ON PIPELINE)	UDACS PLATE NO. 37 SHEET 1 OF 3

08:21 Plot ● 12/21/08 I:\UDACS\section 5 - standard plates_New Numbered Updated Plates\new udac-37.dwg

UNIFORM DESIGN STANDARDS FOR WATER DISTRIBUTION SYSTEMS

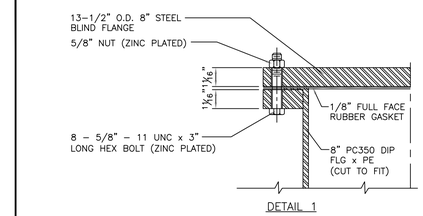

DETAIL 1

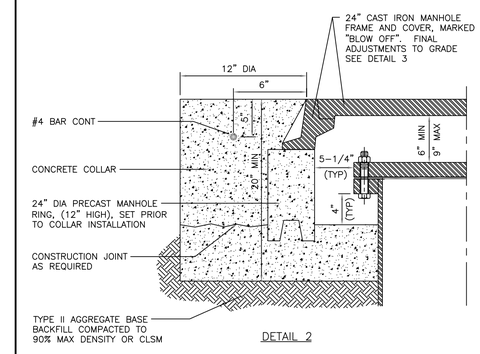

DETAIL 2

NOT TO SCALE	FILE NAME: UDACS-37 DRAWN BY: SDM CHECKED BY: SPM	6" MANUAL BLOW-OFF ASSEMBLY FOR P.V.C. OR D.I. PIPE (INSTALLATION AT LOW POINTS ON PIPELINE)	UDACS PLATE NO. 37 SHEET 2 OF 3

LVVWD APPROVAL

APPROVED FOR CONSTRUCTION

LAS VEGAS VALLEY WATER DISTRICT PLANNING AND ENGINEERING SERVICES

PROJECT No. 139055 FIRST APPROVED DATE

NO.	REVISIONS	DATE
		APPROVED

CLARK COUNTY NEVADA

LAS VEGAS BLVD WATERLINE REPLACEMENT - TROPICANA AVE TO FLAMINGO RD (PHASE E/F)

CIVIL DETAILS - LATERAL

CLARK COUNTY, NEVADA, DEPARTMENT OF PUBLIC WORKS

PROFESSIONAL ENGINEER - STATE OF NEVADA
RAY P. MONTOYA
Exp. 12/31/2021
CIVIL
No. 025877
10/08/2021

PROJECT No:	500-897-LV-EF	DRAWN BY:	GAG/KAS/KMT
DESIGNED BY:	ROM/GAG	CHECKED BY:	ALF/RPM/ROM
APPROVED BY			

Kimley»Horn
6671 Las Vegas Boulevard South, Suite 320
Las Vegas, Nevada 89119
Tel. No.(702) 862-3600

SCALE	
HORIZ:	N/A
VERT:	N/A
FIELD BOOK	

DRAWING NO. WD-16

SHT. 72 OF 80

L-2304

Plot on this document without written authorization and adaptation by Kimley-Horn and Associates, Inc. shall be without liability to Kimley-Horn and Associates, Inc.
User: Gerardo.Gonzalez
Path: K:\TUC_Waterresources\096833000_LasVegasBlvd\CADD\LVB Phase E Water Plans\WD16-WD17.dwg
Kimley-Horn and Associates, Inc. Copyright © 2021 This document is intended only for the specific purpose and client for which it was prepared. Reuse of and improper reliance on this document without written consent by Kimley-Horn and Associates, Inc. is prohibited and any such reuse or reliance will be at the user's sole risk.

UNIFORM DESIGN STANDARDS FOR WATER DISTRIBUTION SYSTEMS

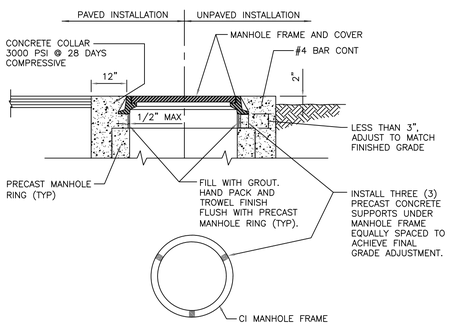

DETAIL 3

NOTES

1. SUPPORT AND STABILIZE VALVE BOX DURING BACKFILL INSTALLATION TO AVOID DAMAGE TO VALVE AND BLOW-OFF ASSEMBLY.
2. ALL CONCRETE TO BE 1/8" TO 1/4" BELOW FINAL STREET GRADE.
3. CONTRACTOR TO FORM CONCRETE COLLAR IN UNIMPROVED AREAS WITH SONOTUBE OR EQUAL AND REMOVE PRIOR TO BACKFILL INSTALLATION (TYP).
4. ALL MJ FITTINGS AND CONNECTIONS TO BE RESTRAINED (TYP).
5. ALL VALVES, FITTINGS AND APPURTENANCES TO BE COATED AND WRAPPED PER SECTION 3, PROTECTIVE COATINGS

NOT TO SCALE	FILE NAME: UDACS-37 DRAWN BY: SDM CHECKED BY: SPM	6" MANUAL BLOW-OFF ASSEMBLY FOR P.V.C. OR D.I. PIPE (INSTALLATION AT LOW POINTS ON PIPELINE)	UDACS PLATE NO. 37 SHEET 3 OF 3

UNIFORM DESIGN STANDARDS FOR WATER DISTRIBUTION SYSTEMS

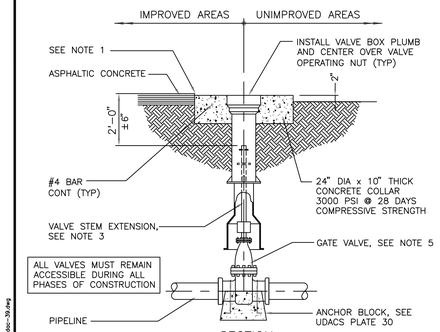

SECTION

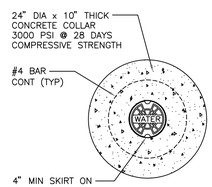

PLAN

NOTES

1. FINAL RIM ELEVATION TO BE 1/8" TO 1/4" BELOW FINAL STREET GRADE.
2. MORE STRINGENT INSTALLATION REQUIREMENTS MAY BE IMPOSED BY THE ENTITY HAVING THE JURISDICTION OVER THE VALVE BOX INSTALLATION LOCATION.
3. A VALVE STEM EXTENSION SHALL BE PROVIDED TO WITHIN TWO FEET OF FINISHED GRADE WHERE THE DEPTH TO THE OPERATING NUT EXCEEDS FIVE FEET.
4. CONTRACTOR TO FORM CONCRETE COLLAR IN UNIMPROVED AREAS WITH SONOTUBE OR EQUAL AND REMOVE PRIOR TO BACKFILL INSTALLATION (TYP).
5. ALL GATE VALVES TO BE INSTALLED IN VERTICAL POSITION.

NOT TO SCALE	FILE NAME: UDACS-39 DRAWN BY: SDM CHECKED BY: SPM	VALVE BOX INSTALLATION & ADJUSTMENT	UDACS PLATE NO. 39 SHEET 1 OF 1

UNIFORM DESIGN STANDARDS FOR WATER DISTRIBUTION SYSTEMS

PAD DETAIL

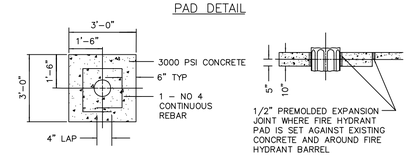

NOTE
SEE SHEET 2 FOR LOCATION OF FIRE HYDRANTS, AND FIRE HYDRANT PADS.

HYDRANT ASSEMBLY DETAIL

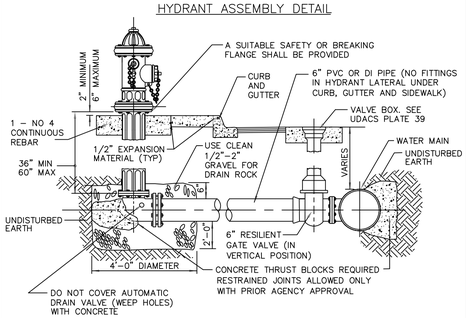

NOT TO SCALE	FILE NAME: UDACS-40 DRAWN BY: SDM CHECKED BY: SPM	FIRE HYDRANT INSTALLATION	UDACS PLATE NO. 40 SHEET 1 OF 3

UNIFORM DESIGN STANDARDS FOR WATER DISTRIBUTION SYSTEMS

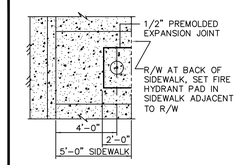

CONDITION A

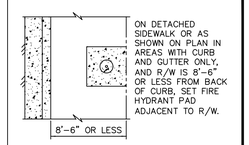

CONDITION D

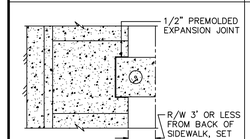

CONDITION B

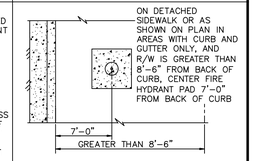

CONDITION E

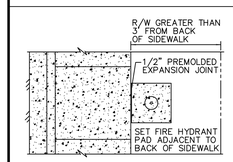

CONDITION C

IF NO SIDEWALK, CURB AND GUTTER EXISTS, SET FIRE HYDRANT PAD ADJACENT TO R/W AS SHOWN IN CONDITION D ABOVE.

CONDITION F

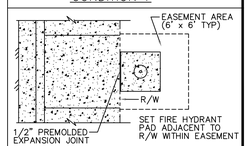

CONDITION G

NOT TO SCALE	FILE NAME: UDACS-40 DRAWN BY: SDM CHECKED BY: SPM	FIRE HYDRANT INSTALLATION	UDACS PLATE NO. 40 SHEET 2 OF 3

LVVWD APPROVAL

APPROVED FOR CONSTRUCTION

LAS VEGAS VALLEY WATER DISTRICT PLANNING AND ENGINEERING SERVICES

PROJECT No. 139055 FIRST APPROVED DATE

NO.	REVISIONS	DATE
		APPROVED

CLARK COUNTY NEVADA

LAS VEGAS BLVD WATERLINE REPLACEMENT - TROPICANA AVE TO FLAMINGO RD (PHASE E/F)

CIVIL DETAILS - LATERAL

CLARK COUNTY, NEVADA, DEPARTMENT OF PUBLIC WORKS

PROFESSIONAL ENGINEER - STATE OF NEVADA
RAY P. MONTOYA
Exp. 12/31/2021
CIVIL
No. 025817
10/08/2021

PROJECT No: 500-897-LV-EF DRAWN BY: GAG/KAS/KMT
DESIGNED BY: ROM/GAG CHECKED BY: ALF/RPM/ROM
APPROVED BY

Kimley»Horn
6671 Las Vegas Boulevard South, Suite 320
Las Vegas, Nevada 89119
Tel. No.(702) 862-3600

SCALE
HORIZ: N/A
VERT: N/A
FIELD BOOK

DRAWING NO.
WD-17
SHT. 73 OF 80
L-2304

Reuse of and improper reliance on this document without written authorization and adaptation by Kimley-Horn and Associates, Inc. shall be without liability to Kimley-Horn and Associates, Inc.
User: Gerardo.Gonzalez
Path: K:\Civil_Water\Resources\WA31300_Las Vegas Blvd_LV\Phase E Water Plans\WD16-WD17.dwg
This document is intended only for the specific purpose and client for which it was prepared. Reuse of and improper reliance on this document without written consent by Kimley-Horn and Associates, Inc. is prohibited and always prohibited.

UNIFORM DESIGN STANDARDS FOR WATER DISTRIBUTION SYSTEMS

NOTES

1. ALL WORK SHALL BE DONE IN STRICT ACCORDANCE WITH THE REQUIREMENTS AND APPROVED FIRE HYDRANT INSTALLATION GUIDES OF THE FIRE DEPARTMENT HAVING JURISDICTION.
2. NO HYDRANT SHALL BE LOCATED WITHIN 25 FEET OF ANY STRUCTURE OR 6 FEET OF A DRIVEWAY, POWER POLE, LIGHT STANDARD, OR ANY OTHER OBSTRUCTION. FOR WALLS, FENCE, AND PLANTER LOCATIONS, A PERIMETER AROUND THE HYDRANT MEASURING A MINIMUM OF 3 FEET FROM ITS CIRCUMFERENCE SHALL BE MAINTAINED CLEAR OF ALL OBSTRUCTIONS AT ALL TIMES. HYDRANTS MUST BE LOCATED A MINIMUM OF 6 FEET AWAY FROM THE BEGINNING OF A TURNING RADIUS.
3. 6" FIRE HYDRANT LATERAL SHALL BE THE SAME PRESSURE CLASS AS THE DISTRIBUTION MAIN.
4. DUCTILE IRON PIPE TO BE ENCASED WITH TWO LAYERS EIGHT MILS THICK POLYETHYLENE FILM. DO NOT ENCASE FIRE HYDRANT BARREL.
5. ALL FIRE HYDRANTS SHALL BE REPAINTED AS REQUIRED IF DAMAGED DURING INSTALLATION.
6. USE OF FIRE HYDRANT BARREL EXTENSIONS MUST HAVE PRIOR AGENCY APPROVAL.
7. MAXIMUM FIRE HYDRANT LATERAL DEFLECTION SEE UDACS SECTIONS 2.07 AND 3.11
8. ADDITIONAL CLEARANCE FROM THE FRONT OF FIRE HYDRANT TO BACK OF CURB MAY BE REQUIRED BY THE AGENCY.

NOT TO SCALE	FILE NAME: UDACS-40 DRAWN BY: SDM CHECKED BY: SPM	FIRE HYDRANT INSTALLATION	UDACS PLATE NO. 40 SHEET 3 OF 3

UNIFORM DESIGN STANDARDS FOR WATER DISTRIBUTION SYSTEMS

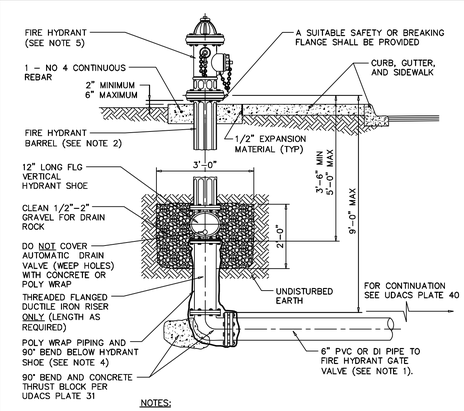

NOTES:

1. INSTALL 45° BENDS AS REQUIRED IN STREET TO ACHIEVE UDACS FIRE HYDRANT LATERAL DEPTH REQUIREMENTS. VERTICAL ADJUSTMENT BENDS ARE NOT TO BE INSTALLED UNDER CURB, GUTTER OR SIDEWALK AREAS.
2. NO FIRE HYDRANT BARREL SHALL BE LONGER THAN 5'–0".
3. WHEN FIRE HYDRANT LATERAL IS DEEPER THAN 5'–0" INSTALL VERTICAL HYDRANT SHOE AND FLG DUCTILE IRON RISER.
4. DUCTILE IRON PIPE AND FITTINGS TO BE ENCASED WITH TWO (2) LAYERS EIGHT MILS THICK POLYETHYLENE FILM. DO NOT ENCASE FIRE HYDRANT BARREL OR SHOE.
5. SEE UDACS PLATE 40 FOR ADDITIONAL FIRE HYDRANT INSTALLATION REQUIREMENTS.

NOT TO SCALE	FILE NAME: UDACS-41 DRAWN BY: SDM CHECKED BY: SPM	DEEP FIRE HYDRANT INSTALLATION	UDACS PLATE NO. 41 SHEET 1 OF 1

UNIFORM DESIGN STANDARDS FOR WATER DISTRIBUTION SYSTEMS

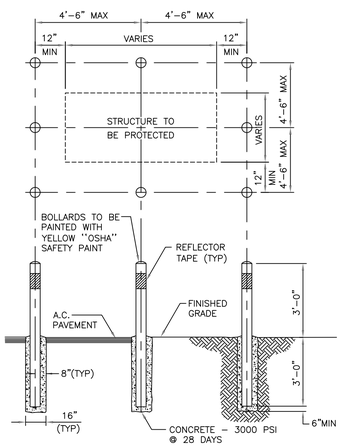

NOTES

1. BOLLARD TO BE 4" SCH. 40 STEEL PIPE, 6'–0" LONG AND FILLED WITH CONCRETE.
2. BOLLARDS ON SIDE NOT ACCESSIBLE TO VEHICLES MAY BE OMITTED BY THE APPROVING AGENCY.
3. PLACE 6" WIDE, YELLOW CLASS 4 REFLECTIVE TAPE (PER STANDARD SPECIFICATIONS, SECTION 716), 4" DOWN FROM TOP, FOR FULL DIAMETER ON ALL BOLLARDS.
4. CONTRACTOR TO ASSURE THAT BOLLARDS ARE PLACED TO ALLOW FULL ACCESS TO THE PROTECTED FACILITY.

NOT TO SCALE	FILE NAME: UDACS-75 DRAWN BY: SDM CHECKED BY: SPM	VEHICULAR PROTECTION BOLLARD	UDACS PLATE NO. 75 SHEET 1 OF 1

LVVWD APPROVAL

APPROVED FOR CONSTRUCTION

LAS VEGAS VALLEY WATER DISTRICT PLANNING AND ENGINEERING SERVICES

PROJECT No. 139055 FIRST APPROVED DATE

NO.	REVISIONS	DATE
		APPROVED

CLARK COUNTY NEVADA

LAS VEGAS BLVD WATERLINE REPLACEMENT - TROPICANA AVE TO FLAMINGO RD (PHASE E/F)

CIVIL DETAILS - LATERAL

CLARK COUNTY, NEVADA, DEPARTMENT OF PUBLIC WORKS

PROFESSIONAL ENGINEER - STATE OF NEVADA
RAY P. MONTOYA
Exp. 12/31/2021
CIVIL
No.025877
10/08/2021

PROJECT No: 500-897-LV-EF DRAWN BY: GAG/KAS/KMT
DESIGNED BY: ROM/GAG CHECKED BY: ALF/RPM/ROM
APPROVED BY

Kimley»Horn
6671 Las Vegas Boulevard South, Suite 320
Las Vegas, Nevada 89119
Tel. No.(702) 862-3600

SCALE
HORIZ: N/A
VERT: N/A
FIELD BOOK

DRAWING NO.
WD-18
SHT. 74 OF 80
L-2304

08/8/2 Plot ● 12/31/08 \\UDACS\section 5 – standard plates_Uses Numbered Updated Plates\use udac-75.dwg
08/8/2 Plot ● 12/31/08 \\UDACS\section 5 – standard plates_Uses Numbered Updated Plates\use udac-41.dwg
Reuse of and improper reliance on this document without written authorization and adaptation by Kimley-Horn and Associates, Inc. shall be without liability to Kimley-Horn and Associates, Inc.
User: Gerardo.Gonzalez
Path: K:\Civil_Water\Resources\92853.3300_Lasvegasblvd\CADD\LVB Phase E Water Plans\WD18-WD19.dwg
This drawing, and any data hereon, is the property of Kimley-Horn, is intended only for the specific purpose and client for which it was prepared.

LAS VEGAS BOULEVARD WATERLINE IMPROVEMENTS

UNIFORM DESIGN STANDARDS FOR WATER DISTRIBUTION SYSTEMS

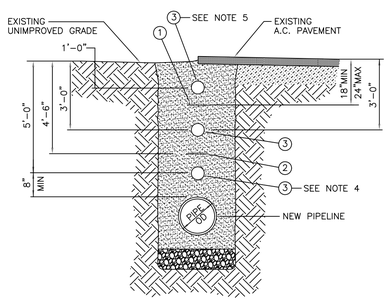

① PIPE LOCATOR RIBBON – 3" WIDTH

② PIPE LOCATOR RIBBON – 3" WIDTH (INSTALLED WHEN COVER OF NEW PIPELINE IS 7'-0" OR GREATER)

③ LOCATOR BALL – SEE NOTES

NOTES

1. CENTER PIPE LOCATOR RIBBON IN TRENCH AND PLACE OVER ENTIRE LENGTH OF ALL TYPES, MATERIALS, SIZES AND LOCATIONS OF WATER MAINS.
2. INSTALL LOCATOR BALLS AT ALL HORIZONTAL FITTINGS, REDUCERS, CAPS, TEST STATIONS, AT EACH JOINT ALONG DEFLECTED SECTIONS OF PIPELINE, AND EVERY 400 FEET OF PIPELINE. LOCATOR BALLS SHALL BE AGENCY APPROVED. (NOT ALL AGENCIES REQUIRE LOCATOR BALLS)
3. IF A.C. PAVEMENT EXISTS INSTALL LOCATOR BALL AT 3'-0" (TYP).
4. IF A CUT TO FINISH GRADE IS ANTICIPATED INSTALL LOCATOR BALLS AT BOTH 3'-0" AND 5'-0" (TYP).
5. IF A FILL TO FINISH GRADE IS ANTICIPATED INSTALL LOCATOR BALLS AT BOTH 1'-0" AND 3'-0" (TYP).

NOT TO SCALE	FILE NAME: UDACS-15 DRAWN BY: SDM CHECKED BY: SPM	PIPE LOCATOR RIBBON AND LOCATOR BALL INSTALLATION	UDACS PLATE NO. 15 SHEET 1 OF 1

08/45 Plot ● 02/09/09 \\UDACS\section 5 - standard plates_New Numbered Updated Plates\new udac-15.dwg

UNIFORM DESIGN STANDARDS FOR WATER DISTRIBUTION SYSTEMS

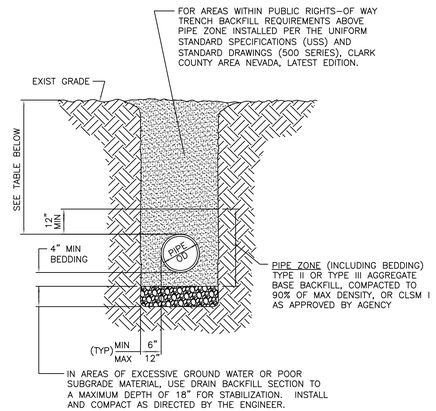

NOTES:

1. FOR TRENCH SECTION NOTES SEE UDACS PLATE 19.
2. THE AGENCY MAY REQUIRE AN ADDITIONAL TWO (2) FEET OF COVER IN ADDITION TO THE COVER SPECIFIED BELOW FOR PIPES SIXTEEN (16) INCHES AND GREATER IN RIGHT-OF-WAY WITHOUT AN ESTABLISHED STREET GRADE.

PIPE DIAMETER (INCHES)	MINIMUM DEPTH OF COVER (INCHES)
TWELVE (12) AND SMALLER	SIXTY (60)
SIXTEEN (16) AND GREATER	SEVENTY-TWO (72) MINIMUM

NOT TO SCALE	FILE NAME: UDACS-16 DRAWN BY: SDM CHECKED BY: SPM	TRENCH SECTION BACKFILL SPECIFICATION UNIMPROVED AREAS	UDACS PLATE NO. 16 SHEET 1 OF 1

07/34 Plot ● 12/31/08 \\UDACS\section 5 - standard plates_New Numbered Updated Plates\new udac-16.dwg

UNIFORM DESIGN STANDARDS FOR WATER DISTRIBUTION SYSTEMS

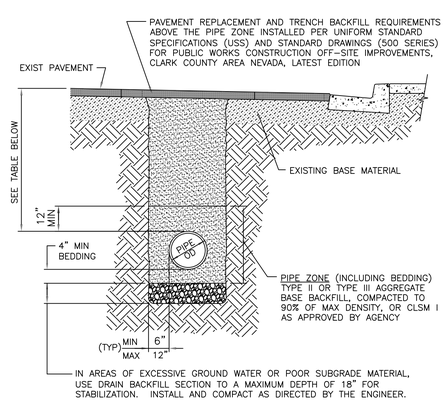

NOTE:
FOR TRENCH SECTION NOTES SEE UDACS PLATE 19.

ROW (FEET)	PIPE DIAMETER (INCHES)	MINIMUM DEPTH OF COVER (INCHES)
SIXTY (60) OR LESS	TWELVE (12) AND SMALLER	FORTY-TWO (42)
SIXTY (60) OR LESS	GREATER THAN TWELVE (12)	SIXTY (60)
GREATER THAN SIXTY (60)	TWELVE (12) AND SMALLER	FORTY-EIGHT (48)
GREATER THAN SIXTY (60)	GREATER THAN TWELVE (12)	SIXTY (60)
GREATER THAN SIXTY (60)	GREATER THAN SIXTEEN (16)	SEVENTY-TWO (72) MINIMUM

NOT TO SCALE	FILE NAME: UDACS-17 DRAWN BY: SDM CHECKED BY: SPM	TRENCH SECTION BACKFILL SPECIFICATION IMPROVED AREAS	UDACS PLATE NO. 17 SHEET 1 OF 1

08/01 Plot ● 12/31/08 \\UDACS\section 5 - standard plates_New Numbered Updated Plates\new udac-17.dwg

LVVWD APPROVAL

APPROVED FOR CONSTRUCTION

LAS VEGAS VALLEY WATER DISTRICT PLANNING AND ENGINEERING SERVICES

PROJECT No. 139055 FIRST APPROVED DATE

NO.	REVISIONS	DATE
		APPROVED

CLARK COUNTY NEVADA

LAS VEGAS BLVD WATERLINE REPLACEMENT - TROPICANA AVE TO FLAMINGO RD (PHASE E/F)

CIVIL DETAILS - LATERAL

CLARK COUNTY, NEVADA, DEPARTMENT OF PUBLIC WORKS

PROFESSIONAL ENGINEER - STATE OF NEVADA
RAY P. MONTOYA
Exp. 12/31/2021
CIVIL
No. 025877
10/08/2021

PROJECT No: 500-897-LV-EF DRAWN BY: GAG/KAS/KMT
DESIGNED BY: ROM/GAG CHECKED BY: ALF/RPM/ROM
APPROVED BY

Kimley»Horn
6671 Las Vegas Boulevard South, Suite 320
Las Vegas, Nevada 89119
Tel. No.(702) 862-3600

SCALE
HORIZ: N/A
VERT: N/A
FIELD BOOK

DRAWING NO.
WD-19
SHT. 75 OF 80
L-2304

Path: K:\TLC_WaterResources\093513000_LasVegasBlvd\CADD\LVB Phase E Water Plans\WD19-WD19.dwg
Date: 10/8/2021 Time: 8:29 AM
User: Gerardo.Gonzalez
Reuse of and improper reliance on this document without written authorization and adaptation by Kimley-Horn and Associates, Inc. shall be without liability to Kimley-Horn and Associates, Inc. Reproducible prints, or any reproduction of prints, is intended only for the specific purpose and client for which it was prepared.

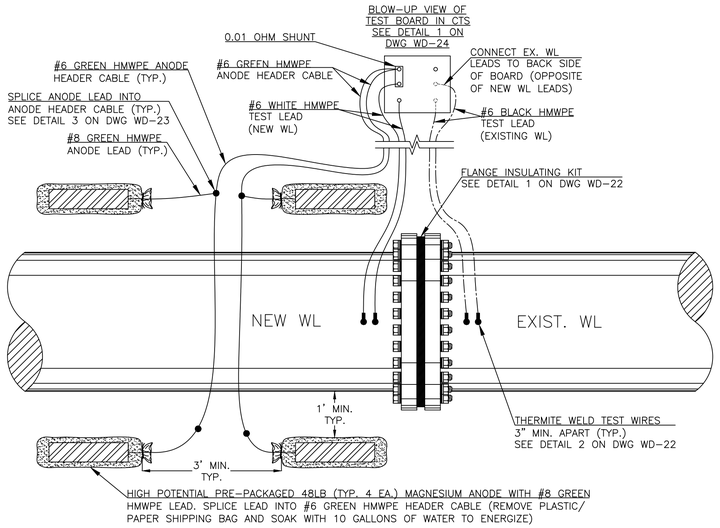

TYPE I TEST STATION AT ISOLATED EXISTING WATER MAIN

NOT TO SCALE

1

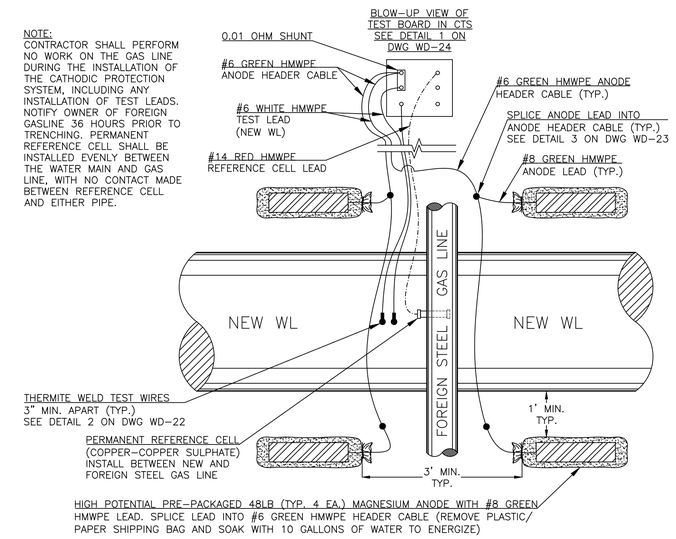

TYPE F TEST STATION AT GASLINE CROSSING

NOT TO SCALE

2

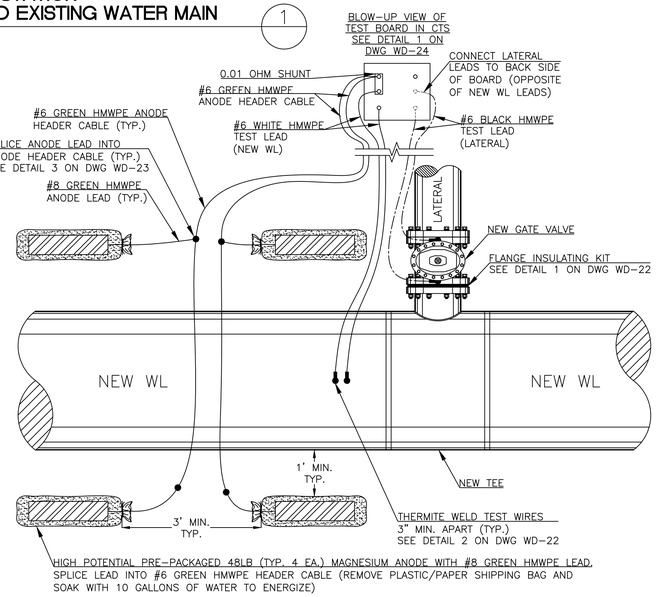

TYPE I TEST STATION AT ISOLATED OUTLET

NOT TO SCALE

3

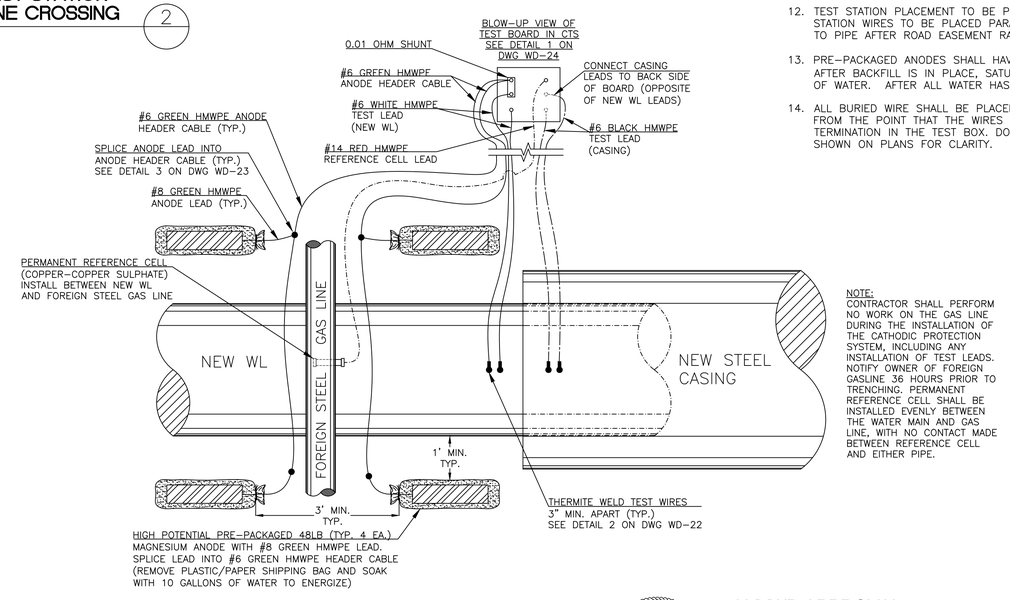

NOTE:
CONTRACTOR SHALL PERFORM NO WORK ON THE GAS LINE DURING THE INSTALLATION OF THE CATHODIC PROTECTION SYSTEM, INCLUDING ANY INSTALLATION OF TEST LEADS. NOTIFY OWNER OF FOREIGN GASLINE 36 HOURS PRIOR TO TRENCHING. PERMANENT REFERENCE CELL SHALL BE INSTALLED EVENLY BETWEEN THE WATER MAIN AND GAS LINE, WITH NO CONTACT MADE BETWEEN REFERENCE CELL AND EITHER PIPE.

TYPE C/F TEST STATION AT CASING AND NEARBY GASLINE CROSSING

NOT TO SCALE

4

GENERAL CATHODIC PROTECTION NOTES

PL12-10 100808

1. ALL TEST LEADS AND ANODE LEADS SHALL BE ATTACHED TO THE STEEL CYLINDER OF THE PIPE BY MEANS OF A "CADWELD" EXOTHERMIC WELD.
2. ALL TEST LEADS AND ANODE LEADS SHALL BE ATTACHED TO EITHER THE PIPELINE'S BELL END, SPIGOT END OR PLAIN END AS SHOWN ON THE DRAWING.
3. ALL EXPOSED PORTIONS OF THE EXOTHERMIC WELD AND COPPER CABLE CONDUCTORS SHALL BE COATED WITH MULTI-USE EPOXY PRIOR TO PLACING GROUT AROUND THE PIPELINE JOINT.
4. ALL TEST LEADS AND ANODE LEADS SHALL BE RUN WITHOUT SPLICES FROM THE CONNECTION AT THE PIPE TO THE CONNECTION AT THE TEST STATION BOX, EXCEPT WHERE THE CATHODIC PROTECTION DESIGN CALLS FOR THE USE OF ANODE HEADER CABLES. SEE LVVWD PL12-14 FOR GALVANIC ANODE SPLICE.
5. ALL TEST LEADS AND ANODE TEST LEADS INSIDE THE TEST BOX SHALL BE BUNDLED TOGETHER AT 8 INCH INTERVALS WITH NYLON CABLE TIES. ALL TEST STATION LEADS SHALL BE PROVIDED WITH SUFFICIENT SLACK SO THAT THE TEST BOARD MAY BE EXTENDED A MINIMUM OF 4 FEET ABOVE THE TEST BOX.
6. ALL TEST LEADS AND ANODE LEADS (WIRE INSULATION) ARE COLOR CODED AS FOLLOWS:

TEST STATION LEADS FROM PIPE	– WHITE
REFERENCE CELL TEST LEADS	– RED
ANODE TEST LEADS	– GREEN
200' TEST LEAD	– BLUE
FOREIGN PIPE LEAD	– YELLOW
CASING	– BLACK

ALL TEST LEADS AND ANODE LEADS SHALL BE COLOR CODED WITH COLORED WIRE INSULATION. COLORED TAPING NOT PERMITTED (TYP).

7. ALL TEST LEADS AND ANODE LEADS SHALL BE CONNECTED TO THE BRASS BOLTS ON THE TEST BOARD WITH SOLDERLESS SCREW TIGHT COPPER LUG CONNECTORS OR PRESSURE TERMINAL CONNECTORS. ALL FASTENERS (SCREWS, LUGS) SHALL BE BRASS OR COPPER.
8. ALL TEST LEADS AND ANODE TEST LEADS SHALL HAVE A MINIMUM OF 4' OF SLACK NEAR THE PIPE JOINT TO PREVENT DAMAGE DURING THE BACKFILL OPERATION.
9. ALL TEST LEADS AND ANODE TEST LEADS SHALL BE PLACED ALONG THE SIDE AND BELOW THE SPRINGLINE OF THE PIPE.
10. DUAL TEST STATIONS – LABEL ALL WIRES TO DISTINGUISH.
11. CABLE ASSEMBLIES SHALL BE USED WHEN PRACTICAL.
12. TEST STATION PLACEMENT TO BE PERPENDICULAR TO PIPE. AT INTERSECTIONS TEST STATION WIRES TO BE PLACED PARALLEL TO PIPE FOR PLACEMENT PERPENDICULAR TO PIPE AFTER ROAD EASEMENT RADIUS.
13. PRE-PACKAGED ANODES SHALL HAVE 6" LIFT OF COMPACTED NATIVE BACKFILL. AFTER BACKFILL IS IN PLACE, SATURATE THE AREA WITH TEN (10) GALLONS MINIMUM OF WATER. AFTER ALL WATER HAS BEEN ABSORBED CONTINUE BACKFILLING.
14. ALL BURIED WIRE SHALL BE PLACED IN A 4" SCH 40 PVC ELECTRICAL CONDUIT FROM THE POINT THAT THE WIRES RUN PERPENDICULAR FROM THE PIPELINE TO THE TERMINATION IN THE TEST BOX. DO NOT PLACE RIBBON IN CONDUIT. CONDUIT NOT SHOWN ON PLANS FOR CLARITY.

LAS VEGAS BOULEVARD WATERLINE IMPROVEMENTS

REGISTERED PROFESSIONAL ENGINEER HARLAN C. GOUDY (MECHANICAL) STATE OF NEVADA 09/28/21

LVVWD APPROVAL

APPROVED FOR CONSTRUCTION

LAS VEGAS VALLEY WATER DISTRICT ENGINEERING SERVICES

PROJECT No. 136878 FIRST APPROVED DATE

PEAK CORROSION
520-722-7484 • 555 N. CAMINO CORDON • TUCSON, AZ 85748

© DRAWINGS AND DESIGN ARE INTENDED ONLY FOR THE PROJECT SHOWN, AND FOR USE ONLY BY: PEAK CORROSION CONTROL, INC.

APPROVED

CLARK COUNTY NEVADA

LAS VEGAS BLVD WATERLINE REPLACEMENT - TROPICANA AVE TO FLAMINGO RD (PHASE E/F)

CATHODIC PROTECTION DETAILS

CLARK COUNTY, NEVADA, DEPARTMENT OF PUBLIC WORKS

NACE CATHODIC PROTECTION SPECIALIST SHAWNA GOUDY No. 3842 09/28/21 NACE INTERNATIONAL

PROJECT No:	500-897-LV	DRAWN BY:	RBD
DESIGNED BY:	SMG	CHECKED BY:	SMG
APPROVED BY		DATED:	9/28/21

Kimley»Horn
6671 Las Vegas Boulevard South, Suite 320
Las Vegas, Nevada 89119
Tel. No.(702) 862-3600

SCALE
HORIZ:
VERT:
FIELD BOOK

DRAWING NO.
WD-20
SHT. 76 OF 80
L-2248

User: shawnadeyoungh
Path: J:\Projects\Business Files\PEAK CORROSION CONTROL\PEAK-Designs\Eng Testing\Kimley Horn- Las Vegas Strip 30" & 24" Mains Design (2019-2021)\Design\Kimley-Horn - Las Vegas Strip Phase E-F - CP DETAILS - 9-27-21.dwg /
This document, together with the concepts and designs presented herein, as an instrument of service, is intended only for the specific purpose and client for which it was prepared. Reuse of and improper reliance on this document without written authorization and adaptation by Kimley-Horn and Associates, Inc. shall be without liability to Kimley-Horn and Associates, Inc.

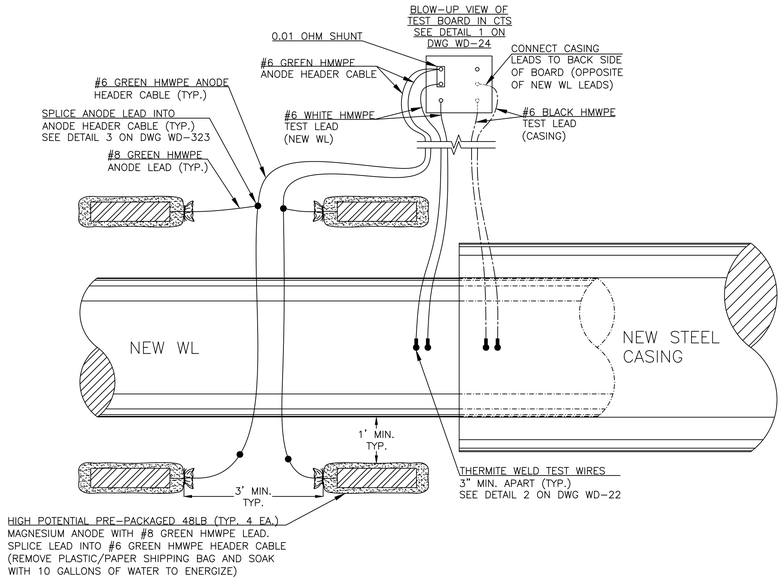

TYPE C TEST STATION AT ISOLATED STEEL CASING (1)

NOT TO SCALE

LAS VEGAS PHASE E/F TRANSMISSION MAIN - CATHODIC PROTECTION SYSTEM LOCATIONS							
REF	STATION*	DETAIL #	TEST LEAD PAIRS	FIK SIZE	PIPE MATERIAL	CTS TYPE	DESCRIPTION
1	147+25	2 / WD-21	1		36" MLTC	T	BEGIN NEW 36" MLTC MAIN
2	147+41.38	3 / WD-20	2	16"	16" DIP	I	Valve Isolation from Existing 30"
3	149+17	2 / WD-20	1		36" MLTC	F	Existing 2" STL Gas
4	151+03.5	2 / WD-21	1		36" MLTC	T	Transition from 36" MLTC to 24" DIP
5	151+32.93	3 / WD-20	2	24"	24" DIP	I	Isolated at Gate Valve off New 12" DIP
6	151+70	1 / WD-21	2		24" DIP	C	42" Short Steel Casing
7	153+34.88	1 / WD-20	2	24"	24" DIP	I	Isolated at 24" DIP to Existing 30" SCCP Sleeve Coupling at Tropicana Ave.
8	153+64.73	4 / WD-20	2		24" DIP	C/F	42" Steel Casing 21 LF and Existing 4" STL Gas at Sta. 153+64.73
9	153+65.06	3 / WD-20	1	12"	24" DIP	I	Isolated at Gate Valve off New 12" DIP
10	153+95	1 / WD-21	2		24" DIP	C	42" Short Steel Casing
11	154+40	1 / WD-21	2		24" DIP	C	42" Short Steel Casing
12	155+18	2 / WD-20	1		24" DIP	F	Existing 16" STL Gas
13	156+80	1 / WD-21	2		24" DIP	C	42" Short Steel Casing
14	157+57.92	2 / WD-21	1		36" MLTC	T	Transition from 24" DIP to 36" MLTC
15	159+35	2 / WD-20	2		36" MLTC	F	Existing 4" STL Gas Crossing 36" MLTC Pipe
16	159+96.04	1 / WD-21	2		36" MLTC	C	Begin 54" Steel Casing Isolation (36" MLTC Pipe)
17	160+79.59	1 / WD-21	2		36" MLTC	C	End 54" Steel Casing (36" MLTC Pipe)
18	166+00	2 / WD-21	1		36" MLTC	T	MGM (Private Road)
19	172+17	2 / WD-20	1		36" MLTC	F	Existing 2" STL Gas Crossing 36" MLTC Pipe
20	181+38.14	2 / WD-21	1		36" MLTC	T	Transition from 36" MLTC to 24" DIP
21	181+67.09	3 / WD-20	2	24"	24" DIP	I	Reducer or near Valve Isolation from Existing 36" at Harmon Ave.
22	182+25	1 / WD-21	2		24" DIP	C	42" Short Steel Casing
23	182+77	1 / WD-21	2		24" DIP	C	42" Short Steel Casing
24	183+10.51	3 / WD-20	2	24"	24" DIP	I	Valve Isolation off Existing 24"
25	188+87	2 / WD-20	1		24" DIP	F	Existing 6" STL Gas
26	191+32	1 / WD-21	2		24" DIP	C	42" Short Steel Casing
27	199+70	2 / WD-21	1		24" DIP	T	END NEW 24" DIP MAIN

*Station shown indicates location of the actual connection of cathodic protection leads to the pipe.

NOTES:

1) Connections to the water main must be isolated with flange insulating kit per 1 / WD-22.
2) Isolate ARV, BO, and laterals as appropriate.
3) Field locate test stations for permanency.

FLANGE INSULATING KIT LOCATION TABLE			
FIK STATION	CTS REF#	FIK SIZE	DESCRIPTION
147+20		3"	Manual ARA
147+41.38	2	16"	16" Lateral / New 30" Main
151+36		6"	Blow-Off Assembly
151+32.93	5	24"	12" Main / New 24" Main
151+31.07		8"	8" Lateral Reconnection
151+42		6"	6" Lateral / New 24" Main
151+34.88	7	24"	Isolate 24" Lateral from 30" Existing Main
153+44.15		6"	Blow-Off Assembly
153+65.06	9	12"	12" Lateral / New 24" Main
157+30.16		6"	6" Lateral Reconnection
157+30		6"	Air Valve Assembly
159+16.74		12"	12" Valved Outlet
159+44.34		6"	Blow-Off Assembly
159+54.67		6"	Air Valve Assembly
160+85.58		6"	Blow-Off Assembly
161+13.76		6"	Air Valve Assembly
161+53.43		12"	12" Lateral / New 24" Main
165+65.94		6"	Blow-Off Assembly
165+82.98		6"	Air Valve Assembly
165+89.60		8"	8" Lateral Reconnection
178+66.51		6"	6" Lateral Reconnection
181+67.09	21	24"	Isolate 24" Lateral from Existing Main
183+10.51	24	24"	Isolate 24" Lateral from Existing Main
183+47		6"	Blow-Off Assembly
183+94.42		8"	8" Lateral Reconnection
184+73.25		6"	Air Valve Assembly
184+93.40		6"	Air Valve Assembly
186+61.90		6"	6" Fire Hydrant Connection
188+57.75		10"	10" Lateral Reconnection
188+61		6"	Blow-Off Assembly
188+78.07		6"	Air Valve Assembly
189+05.33		10"	10" Lateral
191+35.34		6"	Blow-Off Assembly
192+10.32		8"	8" Lateral Reconnection
192+69.64		12"	12" Lateral Reconnection
194+12.88		6"	6" Fire Hydrant Relocation
194+28.31		6"	Air Valve Assembly
194+48.31		6"	Air Valve Assembly
197+03.21		6"	6" Fire Hydrant Relocation
197+38.09		12"	12" Lateral Reconnection
199+00.2		16"	16" Interconnection
199+43.18		6"	6" Lateral Reconnection
199+50.87		6"	Blow-Off Assembly
199+70		3"	Manual ARA
	TOTAL:	44	

NOTE: Locations, quantities and sizes are estimated. Contractor to verify with plans and pipe laying plans.

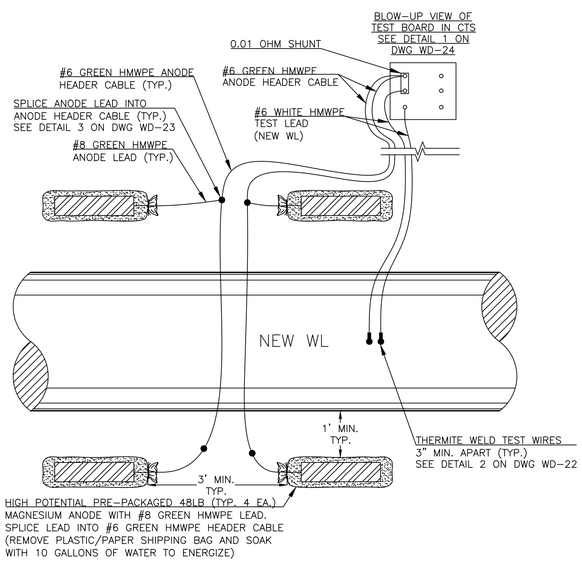

TYPE T TEST STATION TYPICAL CTS WITH ANODES (2)

NOT TO SCALE

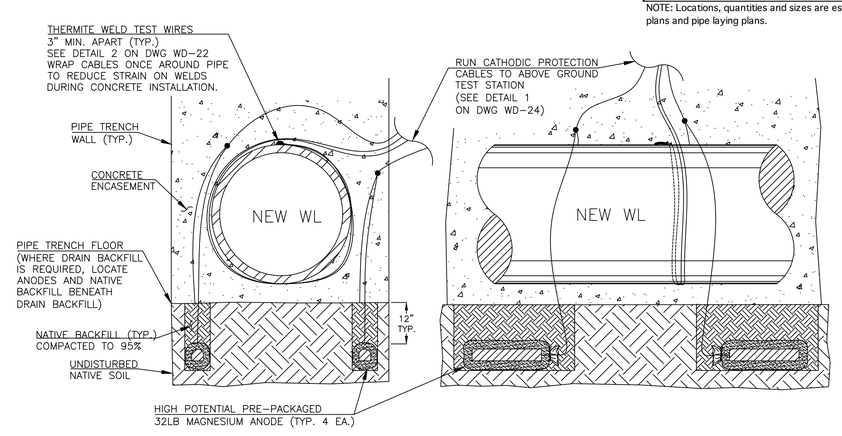

ANODE INSTALLATION AT CONCRETE ENCASEMENT (3)

NOT TO SCALE

REGISTERED PROFESSIONAL ENGINEER HARLAN C. GOURY MECHANICAL STATE OF NEVADA 09/28/21

LVVWD APPROVAL

APPROVED FOR CONSTRUCTION

LAS VEGAS VALLEY WATER DISTRICT ENGINEERING SERVICES

PROJECT No. 136878 FIRST APPROVED DATE

PEAK CORROSION

© DRAWINGS AND DESIGN ARE INTENDED ONLY FOR THE PROJECT SHOWN, AND FOR USE ONLY BY: PEAK CORROSION CONTROL, INC.

APPROVED

CLARK COUNTY NEVADA

LAS VEGAS BLVD WATERLINE REPLACEMENT - TROPICANA AVE TO FLAMINGO RD (PHASE E/F)

CATHODIC PROTECTION DETAILS

CLARK COUNTY, NEVADA, DEPARTMENT OF PUBLIC WORKS

CERTIFIED CATHODIC PROTECTION SPECIALIST SHAWNA GOUDY No. 3842 09/28/21 NACE INTERNATIONAL

PROJECT No:	500-897-LV	DRAWN BY:	RBD
DESIGNED BY:	SMG	CHECKED BY:	SMG
APPROVED BY		DATED:	9/28/21

Kimley»Horn

6671 Las Vegas Boulevard South, Suite 320 Las Vegas, Nevada 89119 Tel. No.(702) 862-3600

SCALE
HORIZ:
VERT:
FIELD BOOK

DRAWING NO.
WD-21
SHT. 77 OF 80
L-2248

LAS VEGAS BOULEVARD WATERLINE IMPROVEMENTS

User: shownadagraph
Path: J:\Projects\Business Files\PEAK CORROSION CONTROL\PEAK-Designs\Eng Testing\Kimley Horn- Las Vegas Strip 30" & 24" Mains Design (2019-2021)\Phase E-F (2021)\Design\Kimley-Horn - Las Vegas Strip Phase E-F - CP DETAILS - 9-27-21.dwg /
This document, together with the concepts and designs presented herein, as an instrument of service, is intended only for the specific purpose and client for which it was prepared. Reuse of and improper reliance on this document without written authorization and adaptation by Kimley-Horn and Associates, Inc. shall be without liability to Kimley-Horn and Associates, Inc.

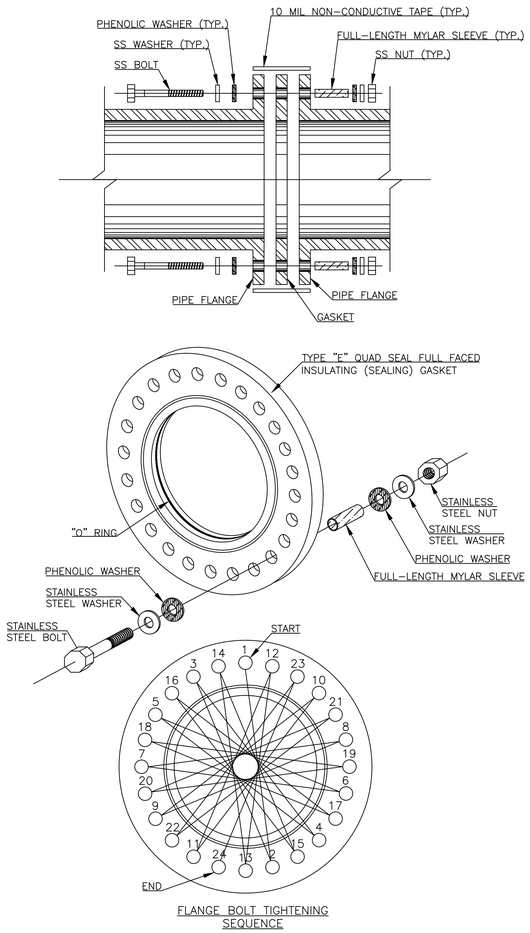

FLANGE INSULATING KIT INSTALLATION (1)

NOT TO SCALE

FLANGE INSULATING KIT NOTES:

1. CATHODIC PROTECTION MATERIALS ARE TO BE LEFT IN MANUFACTURER'S BOXES, PACKAGES, ETC.
2. THE SEAMLESS (ONE PIECE) PHENOLIC NEOPRENE FACED/COATED TYPE "E" FLANGE INSULATING GASKET SHALL HAVE A DIELECTRIC STRENGTH GREATER THAN OR EQUAL TO 400 VOLTS PER MIL.
3. PLAIN PHENOLIC GASKETS WITHOUT O RINGS SHALL BE SANDWICHED BETWEEN TWO 1/8" STANDARD SERVICE GASKETS.
4. IF REQUIRED, BOLT HOLES SHALL BE REAMED AFTER FITTING FLANGES TOGETHER, BUT PRIOR TO INSERTING MYLAR INSULATING SLEEVES.
5. HARDWARE SHALL BE NON-CONDUCTIVE ANTI-SEIZE OR DIELECTRIC ANTI-SEIZE SS316 STAINLESS STEEL.
6. THE BOLT TORQUE REQUIREMENT SHALL BE IN ACCORDANCE WITH THE MANUFACTURER'S RECOMMENDATION.
7. TO PROVIDE EVEN SEALING ON A FLANGE GASKET THE CONTRACTOR SHALL HAND TIGHTEN THE BOLTS IN THE SEQUENCE SHOWN UNTIL THE FLANGE FACES ARE IN CONTACT WITH THE GASKET. AFTER THE FLANGE FACES ARE IN CONTACT WITH THE GASKET, THEY SHALL BE FIRMLY TIGHTENED IN THE SAME SEQUENCE, TO 30%, AND THEN AGAIN TO 60%, AND AGAIN TO 100% OF THE FINAL TORQUE VALUE.
8. IF APPLICABLE, THE CONTRACTOR SHALL CHECK ALL BOLTS AFTER OPERATING TEMPERATURE HAS BEEN REACHED, PREFERABLY AT ZERO LINE PRESSURE AND AMBIENT TEMPERATURE AND RE-TIGHTEN IF LOOSE. THE SYSTEM SHALL NOT BE ALLOWED TO RETURN TO OPERATING TEMPERATURE AFTER THE INITIAL CYCLING AT AMBIENT TEMPERATURE WITHOUT CHECKING AND RE-TIGHTENING BOLTS AS NECESSARY.
9. ALTHOUGH 24 BOLT HOLES ARE SHOWN, THE SAME BASIC PROCEDURE SHALL BE USED WITH FLANGES HAVING MORE OR LESS BOLT HOLES.
10. THE INSULATED FLANGE SHALL BE WRAPPED WITH A 10 MIL 2" OR 4" NON-CONDUCTIVE TAPE.
11. UPON COMPLETION AND TWENTY-FOUR HOURS PRIOR TO BURIAL, THE CONTRACTOR'S NACE TECHNICIAN/TECHNOLOGIST SHALL VERIFY THE EFFECTIVENESS OF THE FLANGE INSULATING KIT. VERIFICATION AND/OR TEST RESULTS SHALL BE INCLUDED IN THE FINAL CORROSION TEST REPORT.
12. DURING BACKFILLING, THE CONTRACTOR SHALL USE CAUTION TO PREVENT DISPLACEMENT OF ALL STRANDED COPPER CONDUCTORS AND BONDING CONDUCTORS. ANY DAMAGE TO THE BONDING CONDUCTORS SHALL BE REPAIRED AT THE CONTRACTOR'S EXPENSE.

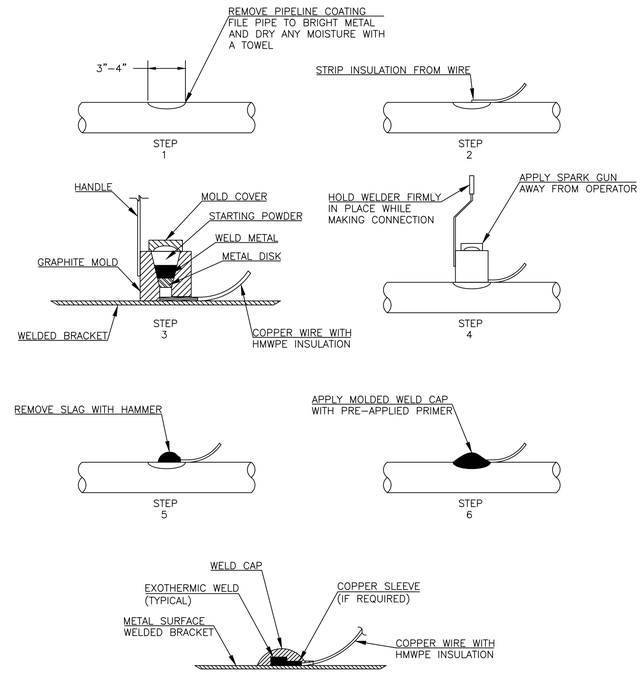

EXOTHERMIC THERMITE WELD PROCEDURE (2)

NOT TO SCALE

LAS VEGAS BOULEVARD WATERLINE IMPROVEMENTS

REGISTERED PROFESSIONAL ENGINEER — STATE OF NEVADA — HARLAN C. GOUDY — MECHANICAL — 09/28/21

LVVWD APPROVAL

APPROVED FOR CONSTRUCTION

LAS VEGAS VALLEY WATER DISTRICT ENGINEERING SERVICES

PROJECT No. 136878 FIRST APPROVED DATE

PEAK CORROSION
520-723-7484 • 955 N. CAMINO CORDON • TUCSON, AZ 85748

© DRAWINGS AND DESIGN ARE INTENDED ONLY FOR THE PROJECT SHOWN, AND FOR USE ONLY BY: PEAK CORROSION CONTROL, INC.

APPROVED

CLARK COUNTY NEVADA

LAS VEGAS BLVD WATERLINE REPLACEMENT - TROPICANA AVE TO FLAMINGO RD (PHASE E/F)

CATHODIC PROTECTION DETAILS

CLARK COUNTY, NEVADA, DEPARTMENT OF PUBLIC WORKS

NACE CATHODIC PROTECTION SPECIALIST — SHAWNA GOUDY — No. 3842 — 09/28/21 — NACE INTERNATIONAL

PROJECT No:	500-897-LV	DRAWN BY:	RBD
DESIGNED BY:	SMG	CHECKED BY:	SMG
APPROVED BY		DATED:	9/28/21

Kimley»Horn
6671 Las Vegas Boulevard South, Suite 320
Las Vegas, Nevada 89119
Tel. No.(702) 862-3600

SCALE
HORIZ:
VERT:
FIELD BOOK

DRAWING NO.
WD-22
SHT. 78 OF 80
L-2248

User: shawnadeguzman
PDF: Projects:Business Files:PEAK CORROSION CONTROL/PEAK-Designs:Eng:Testing/Kimley Horn- Las Vegas Strip 30" & 24" Mains Design (2019-2021)/Phase E:F (2021)/Design/Kimley-Horn - Las Vegas Strip Phase E:F - CP DETAILS - 9-27-21.dwg /
This document, together with the concepts and designs presented herein, as an instrument of service, is intended only for the specific purpose and client for which it was prepared. Reuse of and improper reliance on this document without written authorization and adaptation by Kimley-Horn and Associates, Inc. shall be without liability to Kimley-Horn and Associates, Inc.

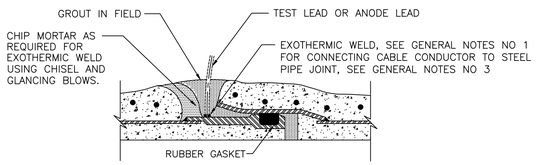

NOTE
FOR WELDED JOINT, ATTACH TEST LEAD OR ANODE LEAD BY EXOTHERMIC WELD TO THE EXPOSED STL END OF PIPE.

TEST LEAD OR ANODE LEAD CONNECTION TO PIPE JOINT CARNEGIE OR ROLLED-GROOVE DETAIL (1)

NOT TO SCALE PL12-5 070703

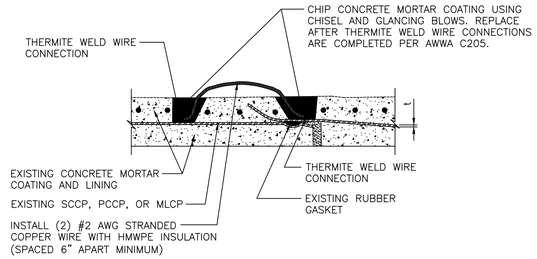

NOTE:
ALL JOINT BONDING INSTALLATIONS USING STRANDED COPPER BONDING CABLES, MAINTAIN A MIN. OF 4 TO 6 INCHES OF SLACK BETWEEN THE BONDING CABLE POINTS OF ATTACHMENT.

JOINT BONDING DETAIL FOR EXISTING SCCP, PCCP, AND MLCP (2)

NOT TO SCALE PL12-12 031205

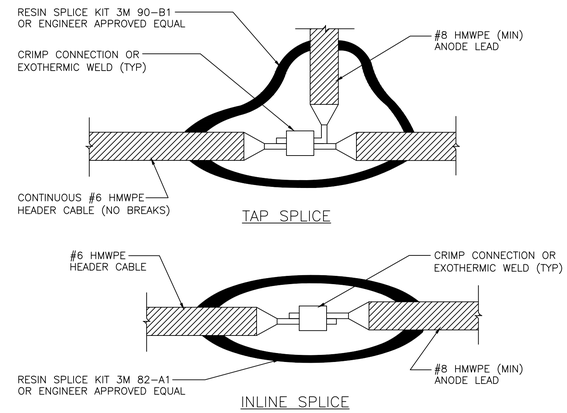

GALVANIC ANODE SPLICE (3)

NOT TO SCALE PL12-14 022519

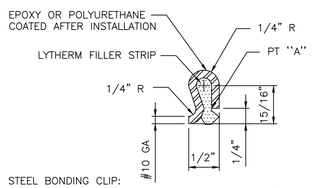

1. STEEL BONDING CLIP:
   MATERIAL SPECIFICATION...ASTM A366 (COMMERCIAL QUALITY)
   CUT LENGTH.....2-1/2" ± 1/16"
   WIDTH.....1-1/4" ± 1/16"
2. LYTHERM FILLER STRIP TO BE 1' x 1-1/2" WIDE TO OVERLAP SIDES OF CLIP
3. CRIMP THE STEEL JOINT BONDING CLIP OVER THE LYTHERM FILLER STRIP AT PT "A" TO COMPRESS THE FILLER MATERIAL. CLOSE THE CAP AT PT "A" AS MUCH AS POSSIBLE WITHOUT CUTTING THE LYTHERM FILLER STRIP
4. IF THE LYTHERM FILLER STRIP IS CUT AT PT "A" REMOVE THE ENTIRE STRIP AND REPLACE WITH A NEW LYTHERM FILLER STRIP PER THIS DETAIL
5. INSTALL THE STEEL BONDING CLIPS EQUIDISTANTLY SPACED ABOVE THE SPRING LINE OF THE PIPE.
6. THE NUMBER OF BONDING CLIPS REQUIRED AT EACH PIPE JOINT:
   24" PIPE AND SMALLER SHALL HAVE TWO (2) BONDING CLIPS INSTALLED.
   PIPE LARGER THAN 24" SHALL HAVE THREE (3) BONDING CLIPS INSTALLED.

BONDING CLIP DETAIL (4)

NOT TO SCALE PL12-7 070703

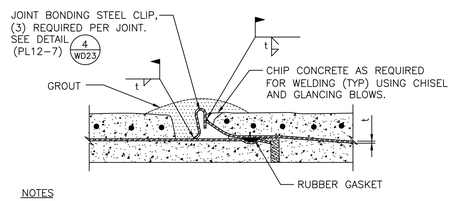

NOTES
1. JOINT BONDING IS REQUIRED AT ALL BELL AND SPIGOT RUBBER GASKET JOINTS EXCEPT FOR FIELD WELDED JOINTS.
2. FOR JOINT BONDING INSTALLATIONS USING STRANDED COPPER BONDING CABLES, MAINTAIN A MIN. OF 4 TO 6 INCHES OF SLACK BETWEEN THE BONDING CABLE POINTS OF ATTACHMENT.

ROLLED - GROOVE JOINT BONDING DETAIL (5)

NOT TO SCALE PL12-8 070703

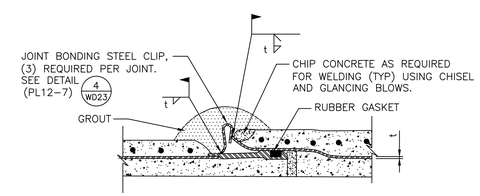

CARNEGIE JOINT BONDING DETAIL (6)

NOT TO SCALE PL12-6 070703

© DRAWINGS AND DESIGN ARE INTENDED ONLY FOR THE PROJECT SHOWN, AND FOR USE ONLY BY:
PEAK CORROSION CONTROL, INC.

REGISTERED PROFESSIONAL ENGINEER HARLAN C. GOUDY (MECHANICAL) STATE OF NEVADA 09/28/21

LVVWD APPROVAL

APPROVED FOR CONSTRUCTION
LAS VEGAS VALLEY WATER DISTRICT ENGINEERING SERVICES
PROJECT No. 136878 FIRST APPROVED DATE

PEAK CORROSION
520-722-7484 • 888 N. CAMINO CORSON • TUCSON, AZ 85748

		APPROVED

CLARK COUNTY NEVADA

LAS VEGAS BLVD WATERLINE REPLACEMENT - TROPICANA AVE TO FLAMINGO RD (PHASE E/F)

CATHODIC PROTECTION DETAILS

CLARK COUNTY, NEVADA, DEPARTMENT OF PUBLIC WORKS

NACE CATHODIC PROTECTION SPECIALIST SHAWNA GOUDY No. 3842 09/28/21 NACE INTERNATIONAL

PROJECT No:	500-897-LV	DRAWN BY:	RBD
DESIGNED BY:	SMG	CHECKED BY:	SMG
APPROVED BY		DATED:	9/28/21

Kimley»Horn
6671 Las Vegas Boulevard South, Suite 320
Las Vegas, Nevada 89119 Tel. No.(702) 862-3600

SCALE
HORIZ:
VERT:
FIELD BOOK

DRAWING NO.
WD-23
SHT. 79 OF 80
L-2248

LAS VEGAS BOULEVARD WATERLINE IMPROVEMENTS

User: shownodepugh
Path: J:\Projects\Business Files\PEAK CORROSION CONTROL\PEAK-Designs\Eng Testing\Kimley Horn- Las Vegas Strip 30" & 24" Mains Design (2019-2021)\Phase E:F (2021)\Design\Kimley-Horn - Las Vegas Strip Phase E:F - CP DETAILS - 9-27-21.dwg /
This document, together with the concepts and designs presented herein, as an instrument of service, is intended only for the specific purpose and client for which it was prepared. Reuse of and improper reliance on this document without written authorization and adaptation by Kimley-Horn and Associates, Inc. shall be without liability to Kimley-Horn and Associates, Inc.

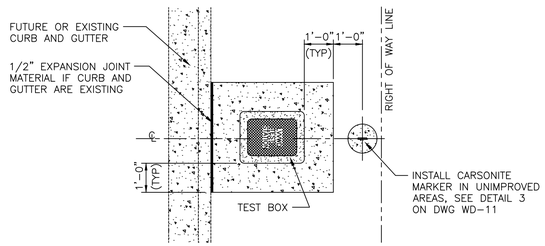

PLAN VIEW

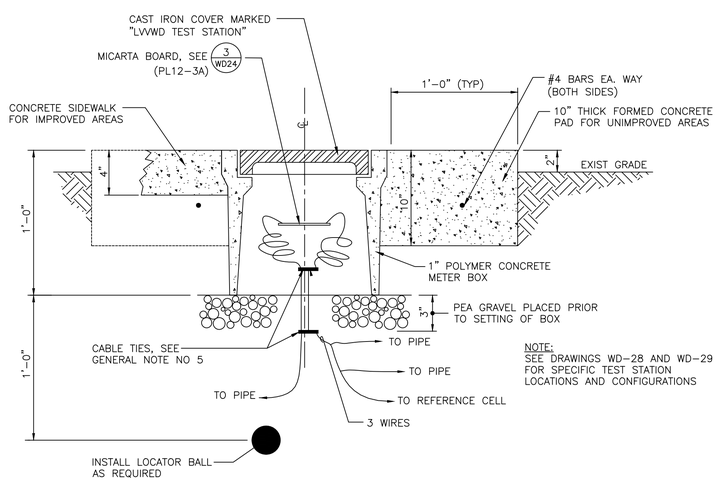

TEST BOX DETAIL - TYPICAL (1)

NOT TO SCALE PL12-2 022519

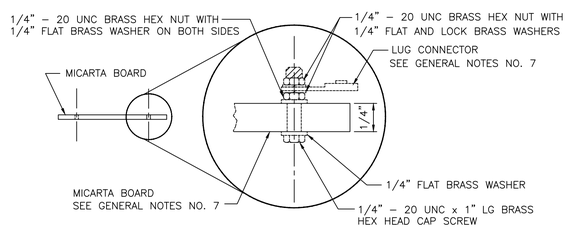

TEST BOARD DETAIL - TYPICAL (2)

NOT TO SCALE PL12-3C 020719

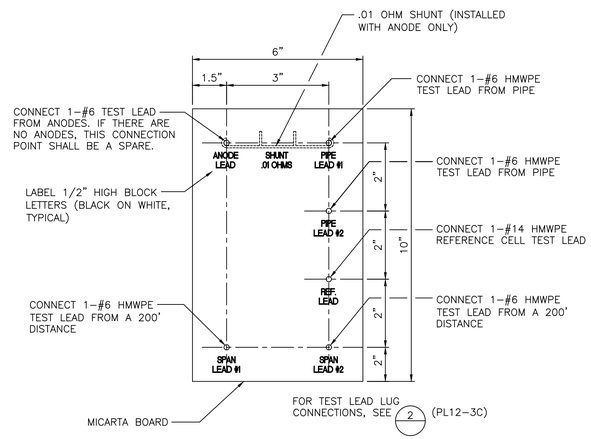

STANDARD TEST BOARD INSTALLATION (3)

NOT TO SCALE PL12-3A 020719

© DRAWINGS AND DESIGN ARE INTENDED ONLY FOR THE PROJECT SHOWN, AND FOR USE ONLY BY: PEAK CORROSION CONTROL, INC.

REGISTERED PROFESSIONAL ENGINEER HARLAN C. GOURY (MECHANICAL) STATE OF NEVADA 09/28/21

LVVWD APPROVAL

APPROVED FOR CONSTRUCTION

LAS VEGAS VALLEY WATER DISTRICT ENGINEERING SERVICES

PROJECT No. 136878 FIRST APPROVED DATE

PEAK CORROSION
520-722-7484 • 555 N. CAMINO CORISON • TUCSON, AZ 85748

APPROVED

CLARK COUNTY NEVADA

LAS VEGAS BLVD WATERLINE REPLACEMENT - TROPICANA AVE TO FLAMINGO RD (PHASE E/F)

CATHODIC PROTECTION DETAILS

CLARK COUNTY, NEVADA, DEPARTMENT OF PUBLIC WORKS

NACE CERTIFIED CATHODIC PROTECTION SPECIALIST SHAWNA GOURY No. 3842 09/28/21 NACE INTERNATIONAL

PROJECT No:	500-897-LV	DRAWN BY:	RBD
DESIGNED BY:	SMG	CHECKED BY:	SMG
APPROVED BY		DATED:	9/28/21

Kimley»Horn
6671 Las Vegas Boulevard South, Suite 320
Las Vegas, Nevada 89119
Tel. No.(702) 862-3600

SCALE
HORIZ:
VERT:
FIELD BOOK

DRAWING NO.
WD-24
SHT. 80 OF 80
L-2248

User: shownodejugh
Path: J:\Projects\Business Files\PEAK CORROSION CONTROL\PEAK-Designs\Eng Testing\Kimley Horn- Las Vegas Strip 30" & 24" Mains Design (2019-2021)\Phase E-F (2021)\Design\Kimley-Horn - Las Vegas Strip Phase E-F - CP DETAILS - 9-27-21.dwg /
This document, together with the concepts and designs presented herein, as an instrument of service, is intended only for the specific purpose and client for which it was prepared. Reuse of and improper reliance on this document without written authorization and adaptation by Kimley-Horn and Associates, Inc. shall be without liability to Kimley-Horn and Associates, Inc.